9. REPLACEMENT MATERIALS

- **Material Requirement**
  - Windows shall be In conformance with *one or more of the following:*
    - AAMA/NWWDA 101/I.S.2-97*; NWWDA I.S. 2-93, 3-95, or 8-95; or ANSI/AAMA 101-93.*
  - Window unit shall be of a design which is appropriate for mobile home installation.
- **Thermal Performance**
  - Window unit shall have a U-value of 0.75 or lower. *Conformance with Title 24 standards recommended (Table 12-1).*
  - Window shall bear an NFRC thermal performance label *and a permanent label attached to the frame*.
- **Replacement Selection**
  - Flanged windows shall be replaced with flanged windows.
  - Horizontal sliders shall be replaced with horizontal sliders.
  - Vertical sliders shall be replaced with vertical or horizontal sliders.
  - Picture windows (fixed sash) shall be replaced with picture windows or sliders.
  - Jalousies shall be replaced with vertical or horizontal sliders.
- **Insect Screens**
  - All openable windows shall be equipped with insect screens.

TABLE 12-1: TITLE 24 REPLACEMENT WINDOW MINIMUM REQUIREMENTS

EFFICIENCY FACTOR	CLIMATE ZONE	MAXIMUM VALUE
Solar Heat Gain Coefficient (SHGC)	2, 4, & 7 – 15	0.40
	1, 3, 5, 6, 16	No Requirement
U-Factor	16	0.55
	1, 2, 10 – 16	0.57
	3 – 9	0.67

WATER HEATER PIPE INSULATION STANDARDS

1. APPROVED MATERIALS

- **All Materials**
  - Maximum flame-spread index of 25 and maximum smoke-developed index of 50, per ASTM E84, or UL 723, or NFPA 255.
- **Insulation**
  - Preformed foam (e.g. closed cell polyethylene) conforming to ASTM C534.
  - Inside diameter of preformed material shall be appropriate for the size pipe being insulated.
  - Minimum thermal performance rating of 180°F.
- **Tape**
  - Tape specified by insulation manufacturer, or
  - Minimum 2" wide pressure-sensitive metallic tape meeting or exceeding strength and adhesive requirements of UL 181A-P or UL 181B-FX.
  - Cloth duct tape and electrical tape are <u>not</u> allowed.
- ***Ties***
  - *Plastic cable ties.*

PREFORMED FOAM PIPE INSULATION

2. **R-VALUE *OF PIPE INSULATION***
   - **R-4 minimum for pipes less than or equal to 2" in diameter.**
     - *Minimum 1" insulation wall thickness.*
     - *Exception: 3/4" wall thickness acceptable if R-value requirement is met.*

   ~~**-R-6 minimum for pipes greater than 2" in diameter.**~~
   ~~**-1" or greater wall thickness.**~~

3. **SHEET OR SEMI-MOLDED INSULATION**
   - **All Units**
     - Not allowed.

4. **HEAT TAPE OR STRAP INSULATION**
   - **All Units**
     - Not allowed.

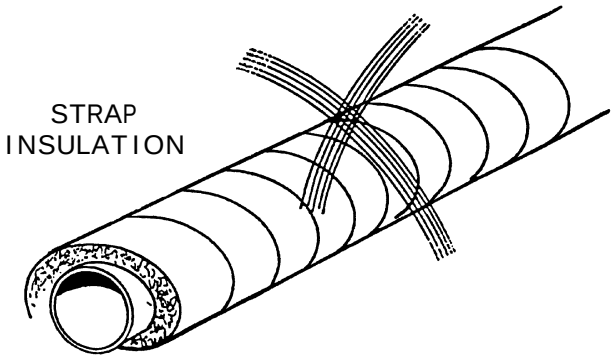

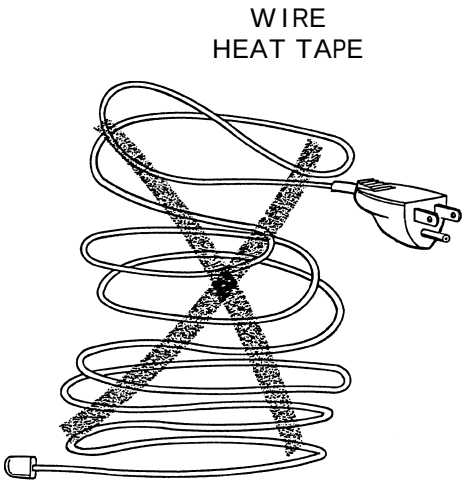

10. GENERAL ATTACHMENT REQUIREMENTS

- **Insulation shall be firmly secured with plastic ties ~~(e.g., UV-resistant cable ties)~~, tape, wire, or sleeves.**
- **All slits and joints shall be glued or taped to achieve complete closure.**
- **All material shall be corrosion-resistant.**
- **Tape shall be used on bends, 90° elbows, and joints.**

11. GLUE FOR ATTACHMENT

- **Glue shall be compatible with insulation and manufacturer's instructions.**

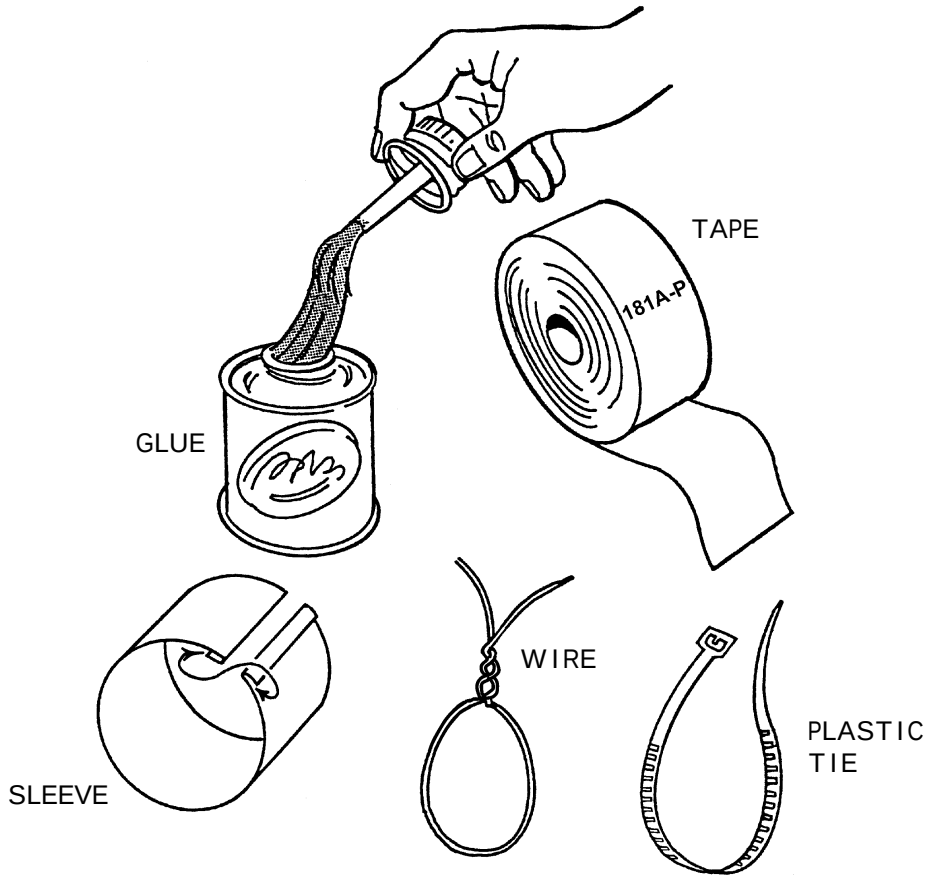

© RHA • 7/18/05 Draft

ENERGY-SAVER SHOWERHEAD AND FAUCET AERATOR STANDARDS

1. APPROVED MATERIALS

- **Showerheads and Aerators**
  - Conformance to ~~ANSI/~~ASME A112.18.~~-22031M~~.
  - Compliance with CEC (Title 24) Residential Manual ~~Part 2.6.1~~*Section 5.2.5*.
- **Showerheads**
  - "Self-cleaning" type or cleanable without being unscrewed from the showerarm.
  - Non-aerating type.
  - Ball joint shall be metal (e.g., chrome-plated brass).
  - Ball joint shall be made of the same material as showerarm.
- **Showerarm Adapters**
  - Adapter shall be metal (e.g. chrome-plated brass).
  - Minimum 5/8" long male pipe threads with a minimum taper of 3% on showerhead end.
- **Aerators**
  - Shall be metal (e.g., chrome-plated brass).

2. WARRANTY

- **Showerheads and Aerators**
  - Minimum three-year warranty.

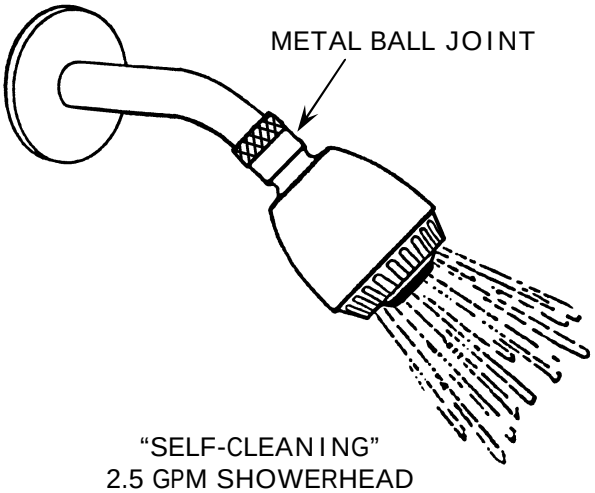

"SELF-CLEANING"
2.5 GPM SHOWERHEAD

3. FLOW RATE

- **Showerheads**
  - Maximum flow rate: 2.50 gpm at 80 psi.
  - Minimum flow rate: 2.0 gpm at 40 psi.
- **Faucet Aerators**
  - Maximum flow rate: ~~2.50~~*2.2* gpm at ~~40~~ *60* psi.

4. SHOWERHEAD FLOW CONTROL

- **Flow-restricting devices shall be factory-installed and mechanically-retained (e.g., with a retaining ring or expansion seat), requiring 8 lbs. or more of pulling force to remove.**
- **Removable flow restrictors are <u>not</u> allowed.**

5. INSTALLATION

- **Functional Showers**
  - Energy-saver showerheads shall be installed on all functional showers that have flow rates greater than 3.0 gpm.
- **Nonfunctional Showers**
  - Energy-saver showerheads shall <u>not</u> be installed on showers which are <u>not</u> functional due to plumbing or physical defects.

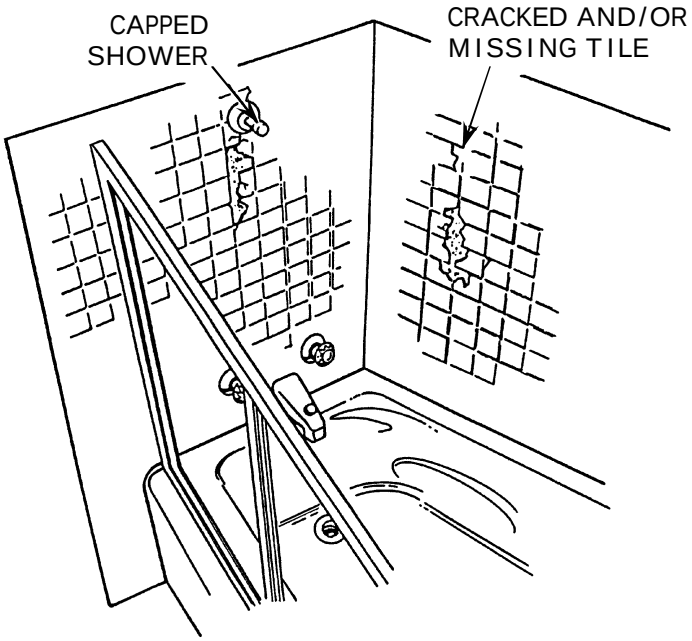

NONFUNCTIONAL SHOWER

HARD-WIRED COMPACT FLUORESCENT FIXTURE STANDARDS

1. MATERIALS

- **Fixture *ballast* must be UL listed *(UL 935)* ~~and meet ANSI/UL Standard 935~~ Class-P.**
- **CFLs must be ~~ENERGY STAR®~~ ~~compliant~~*ENERGY STAR® qualified*.**
- **Compact fluorescent lamp (CFL) tube glass and other housing materials must be UV resistant and heat stable.**
- **Hardwired fixtures and lamps must be fully warranted for one year from date of purchase.**
- **Fixture must allow for lamp replacement.**

2. INSTALLATION

- **All fixtures shall be installed:**
  - In accordance with the current NEC and local codes.
  - In a manner which prevents water from entering or accumulating in wiring compartment, lamp holder or electrical parts.
- **All wiring, conduit, accessories, fasteners, and controls used in exterior locations shall be designed for exterior use.**

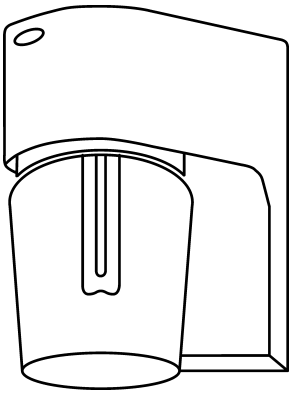

WALL-MOUNT
FLUORESCENT FIXTURE
WITH PHOTO CELL CONTROL

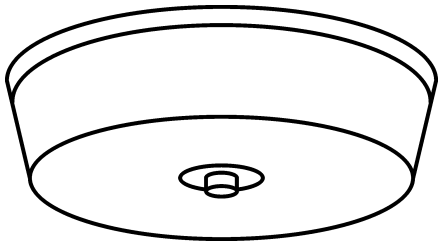

CEILING-MOUNT
COMPACT FLUORESCENT
REPLACEMENT FIXTURE

NATURAL GAS CENTRAL FORCED AIR HEATING SYSTEMS REPAIR AND REPLACEMENT STANDARDS

PART 1: APPROVED MATERIALS

1. ALL MATERIALS

- **Materials installed within a manufactured home shall be in compliance with HCD regulations and HUD MHCSS (Code of Federal Regulations, Chapter XX, Part 3280).**
- **Materials installed outside a manufactured home shall be in compliance with HCD regulations or, as applicable, requirements of the local building department.**

2. HVAC EQUIPMENT

- **Furnaces**
  - All units and components shall be UL listed and AGA certified.
- **Split Systems**
  - Furnaces shall be approved for manufactured home installation.
  - Furnace shall have an AFUE rating of at least ~~90% when available,~~ 80% ~~minimum~~.
  - Air Conditioner*, if replaced in conjunction with furnace*:
    - Minimum EER of 11.~~0~~*5* and SEER of 13.0, with a Thermostatic Expansion Valve (TXV).
    - EER shall be determined by the coil match as listed in the current ARI Directory.
- **Package Units (Dual Packs):**
  - Furnace: Minimum AFUE rating of 80%.
  - Air Conditioner: Minimum EER of ~~10~~*11*.5 and SEER of ~~12~~*13*.0.

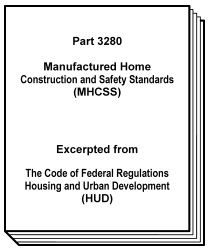

LISTED

LISTED FURNACES AND FLUE SYSTEMS MUST COMPLY WITH HUD MHCSS

3. INSTALLATION COMPONENTS

- **Metal Flue and Vent Pipes**
  - All installed materials shall comply with HUD MHCSS Section 3280.703 and, as applicable, local building department regulations.
  - Flue systems shall be UL listed and in compliance with furnace listing and manufacturer's specifications and instructions.
- **Gas Pipes and Valves**
  - Gas values shall be listed and AGA certified.
  - Gas flexible connectors shall be listed epoxy-coated or stainless steel units.
  - Pilot tubing shall be aluminum (copper not allowed).
  - Fuel-gas piping:
    - Shall be in conformance with manufacturer's instructions, HUD MHCSS Section 3280.705 and, as applicable, requirements of the local building department.
    - Copper gas lines not allowed.
- ***Ducts and Sealants***
  - *Materials shall be in conformance with Section 17, Duct sealing Standards.*

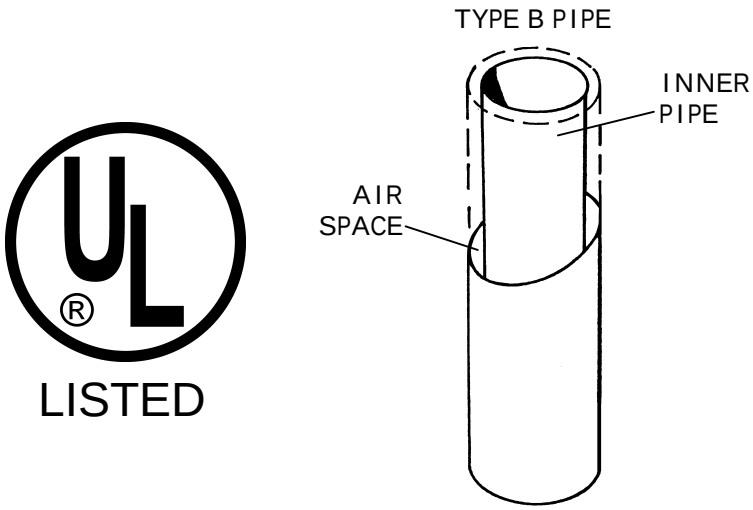

METAL PIPES AND ASSEMBLIES
UL LISTED AND MFR. COMPLIANT

3. INSTALLATION COMPONENTS (continued)

- **Programmable Wall Thermostat**
  - *ENERGY STAR® qualified.*
  - System powered, not battery powered, on 24 volt systems.
  - Digital with anti-short-cycle feature.
  - Minimum setback capability of 10°F.
  - At least two setback periods per 24 hour day, with change cycle increments being no greater than 30 minutes.
  - Manual override and standard alkaline battery backup or other program saving backup system.
  - Positive on/off switch that is easily accessible.
  - Compatible with the HVAC equipment.
- **Standard Wall Thermostat**
  - Alternative when customer refuses programmable thermostat.
  - Digital with built in anti-short-cycle feature.
  - Conforms with manufacturer's instructions.
  - Compatible with the HVAC equipment.
  - Includes a positive on/off switch.

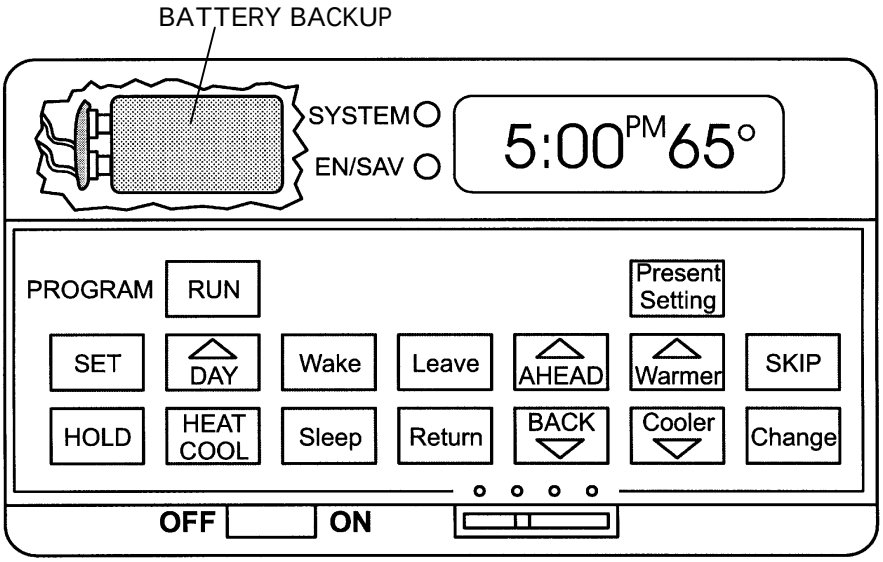

DIGITAL PROGRAMMABLE THERMOSTAT
WITH ON/OFF SWITCH

~~5. MATERIALS FOR CATASTROPHIC DUCT REPAIR~~

~~-All Materials~~

- ~~Maximum flame spread index of 25 and maximum smoke developed index of 50, per ASTM E-84, UL 723 or NFPA 255.~~

~~-Caulks and Sealants~~

- ~~Caulk/sealant material and installation criteria prescribed in Section 2, Caulking Standards, shall be followed.~~
- ~~Foam sealants are not allowed for duct repair/sealing.~~

~~-Duct Mastic and Mesh Tape~~

- ~~Nontoxic, water-resistant mastic listed per UL 181A or 181B standards and labeled "181A-M" or "181B-M".~~
- ~~Fiberglass mesh tape, minimum 2" wide and 9x9 weave per inch.~~

~~-Tapes for Sealing Flexible Nonmetallic and Flexible Metallic Ducts~~

- ~~Tapes with markings that include "181B-FX", minimum 2" wide.~~
- ~~Cloth-back *butyl*-adhesive tapes are allowed if CEC-approved for use in California (e.g., indicated by "CA" in the product number).~~

~~-Tapes for Sealing Rigid Metal Ducts and components~~

- ~~Metallic tapes marked "181A-P" and/or "181B-FX", min. 2" wide.~~
- ~~Aluminum foil tape with minimum 15 mil butyl adhesive ("butyl tape") marked "UL 723" or "181B-FX".~~

~~-Tapes Not Allowed:~~

- ~~Cloth-back *rubber*-adhesive tapes.~~

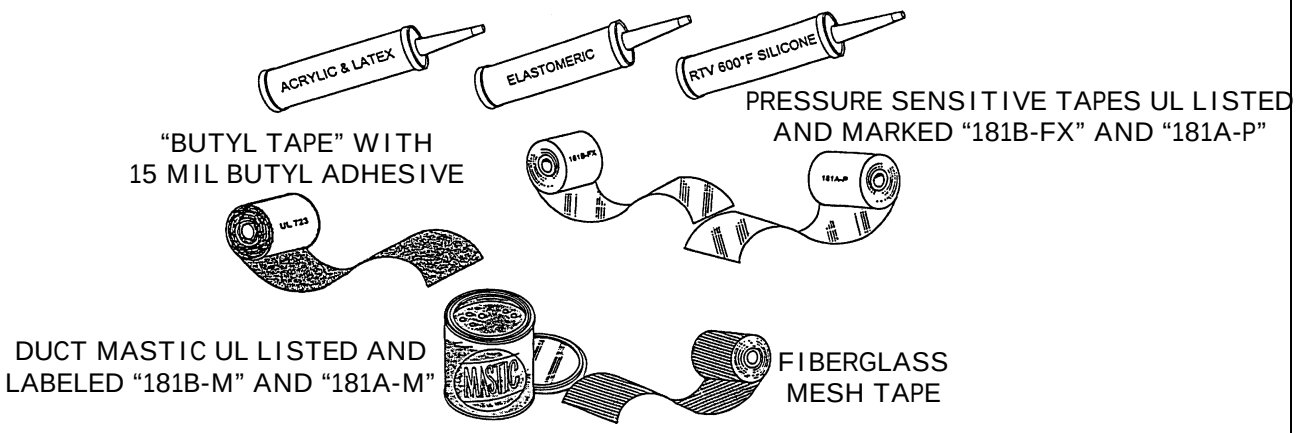

~~4. MATERIALS FOR CATASTROPHIC DUCT REPAIR (continued)~~

~~-Drawbands for Flexible Nonmetallic Ducts~~

- ~~Drawbands shall comply with duct manufacturer's installation instructions and the following specifications:~~
  - ~~-Weather- and UV-resistant duct ties.~~
  - ~~-Loop tensile strength of 150 pounds minimum.~~
  - ~~-Service temperature rating of 165°F minimum.~~
- ~~Drawbands shall be tightened with an adjustable tensioning tool in accordance with duct manufacturer's instructions.~~

~~-Sheet Metal~~

- ~~galvanized sheet steel, or sheet aluminum, at least 0.007" thick.~~

~~-New Fittings (Collars, Sleeves, etc.)~~

- ~~All installed fittings shall be minimum 26 gage.~~
- ~~New fittings installed for Flexible Nonmetallic ducts:~~
  - ~~-All fittings shall be beaded.~~
  - ~~-Starting collars: minimum 4" length.~~
  - ~~-Sleeve/couplings: minimum 6" length.~~

~~-Foam Board and Foam Sealant~~

- ~~Not allowed as a barrier material or sealant in duct systems.~~

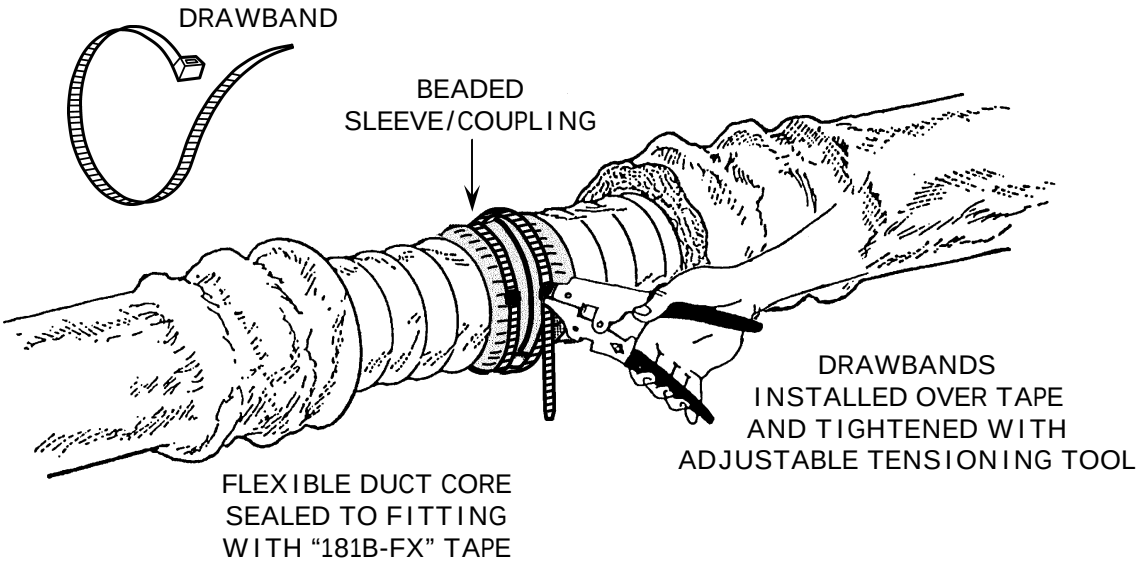

~~4. MATERIALS FOR CATASTROPHIC DUCT REPAIR (continued)~~

~~-Flexible Ducts~~

- ~~In crawl spaces not accessible to animals, flexible ducts may be used to:~~
  - ~~-Replace damaged or deteriorated flexible ducts (e.g., crossover ducts).~~
  - ~~-Install a new ducted return system.~~
- ~~All ducts shall conform to NFPA-90B and UL-181 Class 1.~~
- ~~Insulating material shall have a minimum thermal resistance of R-4.2, or as jurisdiction requires.~~
- ~~Nonmetallic flexible duct core shall be fabricated with a with a spring steel helix bonded within nonporous material (e.g., molded composite or two-ply lamination of polyester).~~
- ~~Metallic flexible duct core shall be fabricated from minimum 0.0065" thick aluminum material or equivalent.~~
- ~~Vapor barrier (jacket) shall:~~
  - ~~-Be rated for mobile home use.~~
  - ~~-Have a minimum thickness of 3.5 mils.~~
  - ~~-Have a maximum permeance of 1.0 perm.~~

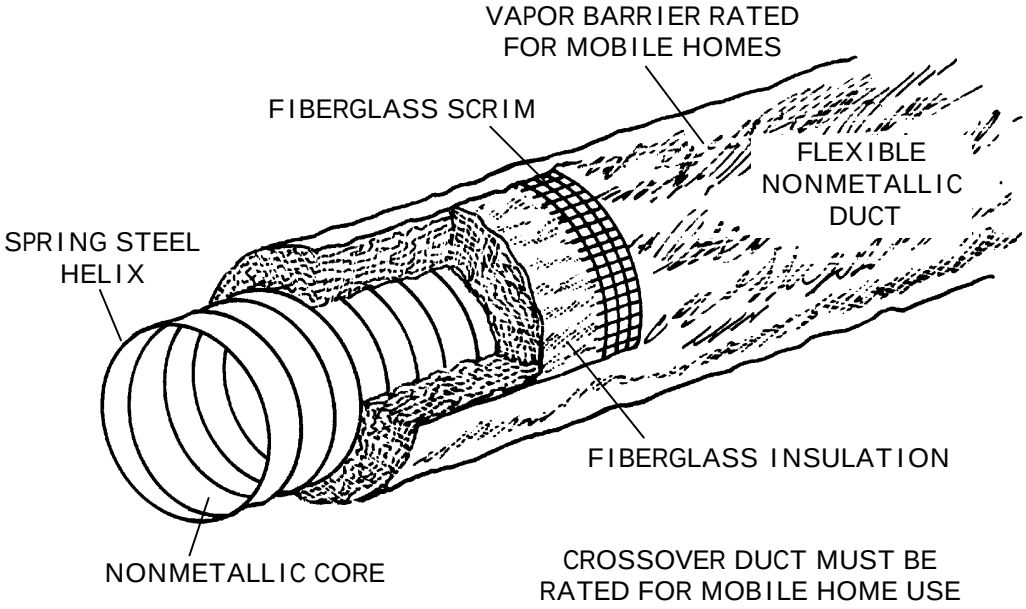

~~6. WARRANTY~~

~~-HVAC Unit Installations~~

- ~~Parts and labor shall be covered by a minimum one (1) year written parts and labor warranty.~~
- ~~Compressor warranty shall extend to five (5) years.~~
- ~~All written warranty information and manufacture's operating and maintenance instructions shall be supplied to the customer.~~

~~-Wall Thermostats~~

- ~~Minimum one-year manufacturer's warranty.~~
- ~~Minimum one-year parts and labor contractor's warranty.~~

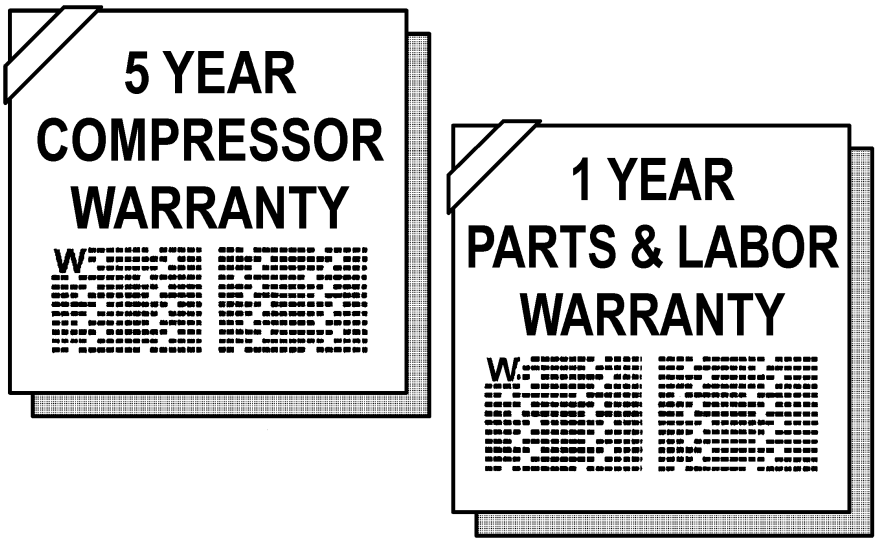

PART 2: NEW FURNACE AND COMBINED FURNACE AND AIR CONDITIONER INSTALLATION

5. GENERAL REQUIREMENTS

- **A permit shall be obtained from and finalized by:**
  - HCD for installations inside the mobile home.
  - HCD or, as applicable, the local building department for installations outside the mobile home.
- **Installation shall be in compliance with manufacturer's instructions and specifications, and, as applicable, with:**
  - HUD MHCSS, the requirements of HCH, and as applicable
  - Requirements of the local building department.
- **Lead-safe practices shall be employed when working with pre-1979 painted materials per state codes T8 Section 1532.1 and T17 Section 36000, et seq.**
- ***Air* Distribution System**
  - Distribution system shall be in conformance with HVAC manufacturer's specifications.
  - Retrofit Units Utilizing Existing Duct System
  - Duct system shall be examined for ~~catastrophic leaks (e.g., partial and complete disconnections).~~ *leaks and brought into conformance with Title 24 requirements, in accordance with the program Policy and Procedures.*
  - *Testing shall be performed in accordance with WIS Section 10, Duct Testing Standards, and repairs and sealing shall be made in accordance with WIS Section 20, Duct Sealing Standards.*

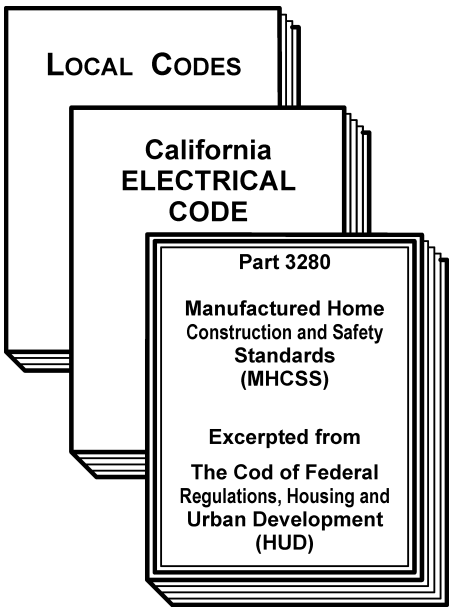

  - The supply and return plenums shall be securely attached to the air handler, with ductwork securely attached to the respective plenums.
  - New ductwork shall be installed in conformance with manufacturer's instructions.

PART 3: NEW FURNACE INSTALLATION

6. LOCATION

- **FAU Enclosure**
  - Enclosure shall be the proper size for required clearances.

7. SYSTEM DESIGN AND PERFORMANCE

- **All Installations**
  - ~~Heating capacity and system design shall be in conformance with standard practices set forth by ACCA (Air Conditioning Contractors of America), Manual J and Manual S.~~
  - *Unit shall be properly sized in accordance with Title 24 or local code, whichever is more stringent.*
  - ~~Furnace shall perform as designed~~ *Capacity of the new system should be equal to or smaller than the existing system*.
- **Installations Utilizing Existing Ducts**
  - New FAU shall be compatible with existing duct system.

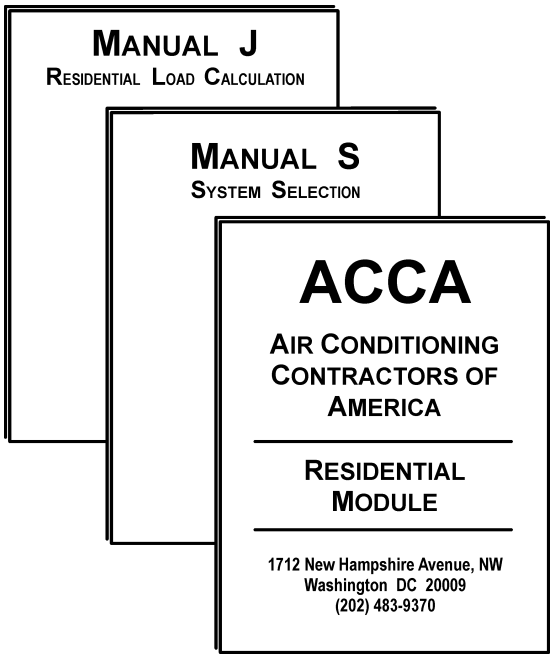

11. AIR DISTRIBUTION SYSTEM

- ***Existing Duct System***
  - *System shall be examined for leaks and disconnections and brought into conformance with LIEE duct leakage requirements.*
  - *Testing shall be performed in accordance with WIS Section 11, Duct Testing Standards, and duct repairs and sealing shall be made in accordance with WIS Section 17, Duct Sealing Standards.*
- ***Return System***
  - *Belly-Cavity and Roof-Cavity Returns*
    - *Existing belly-cavity return shall be abandoned, and a new ducted central return shall be installed.*
    - *Existing leaky roof-cavity return shall be repaired as applicable, and replaced with a new central return when repair is not feasible.*
  - *New central return shall be designed and installed in conformance with applicable standards.*
- ***Cabinet and Plenum***
  - *Components shall be mechanically attached and sealed around the perimeter (cabinet-to-duct connector, cabinet-to-plenum) using materials and methods prescribed in on Section 17.*
  - *Plumbing and wiring penetrations into the evaporator coil box and return air chamber shall be sealed with cork tape.*
- ***New Ductwork***
  - *Components shall be installed in conformance with manufacturer's instructions.*

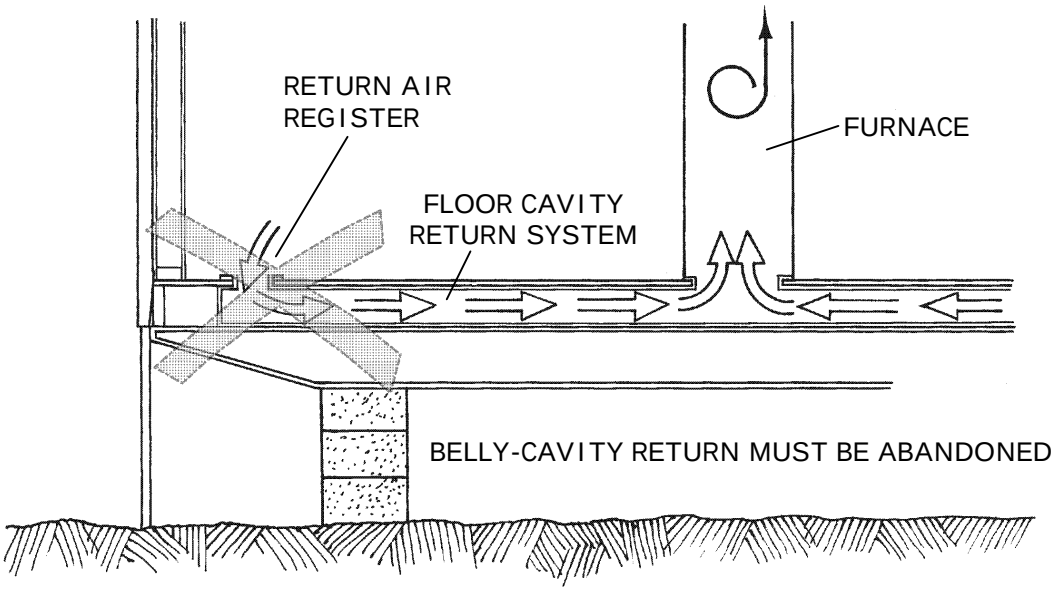

~~13. DUCTS AND PLENUMS~~

- ~~**Disconnections and catastrophic leaks shall be repaired in accordance with Part 8 (Items 51–59).**~~
- ~~**Return System**~~
  - ~~Belly-Cavity and Roof-Cavity Returns~~
    - ~~Belly cavity shall not be utilized for return air.~~
    - ~~Existing belly-cavity return shall be abandoned, and a new ducted central return shall be installed.~~
    - ~~Existing leaky roof-cavity return shall be repaired as needed, and shall be replaced with a new central return when repair is not feasible.~~
  - ~~New central return shall be designed and installed in conformance with applicable standards.~~
- ~~**Cabinet and Plenum**~~
  - ~~Components shall be mechanically attached and sealed around the perimeter (cabinet-to-duct connector, cabinet-to-plenum) using materials and methods prescribed in Item 4.~~
  - ~~Plumbing and wiring penetrations into the evaporator coil box and return air chamber shall be sealed with cork tape.~~

18. ~~CATASTROPHIC~~ DUCT ~~LEAKS~~*TESTING AND SEALING*

- **Duct system shall be ~~checked~~ *examined* for ~~catastrophic~~ leaks and disconnections *and brought into conformance with LIEE requirements, in accordance with the program Policy and Procedures*.**
- ***~~Repairs shall be made in accordance with Part 8 (Items 51–59).~~ Testing shall be performed in accordance with WIS Section 11, Duct Testing Standards, and repairs and sealing shall be made in accordance with the Section 17, Duct Sealing Standards.***

19. FURNACE FILTERS

- **All filters shall be properly installed and clean.**
- **Unframed filters shall be properly supported to prevent being drawn toward the air handler, as prescribed in Part 7.**

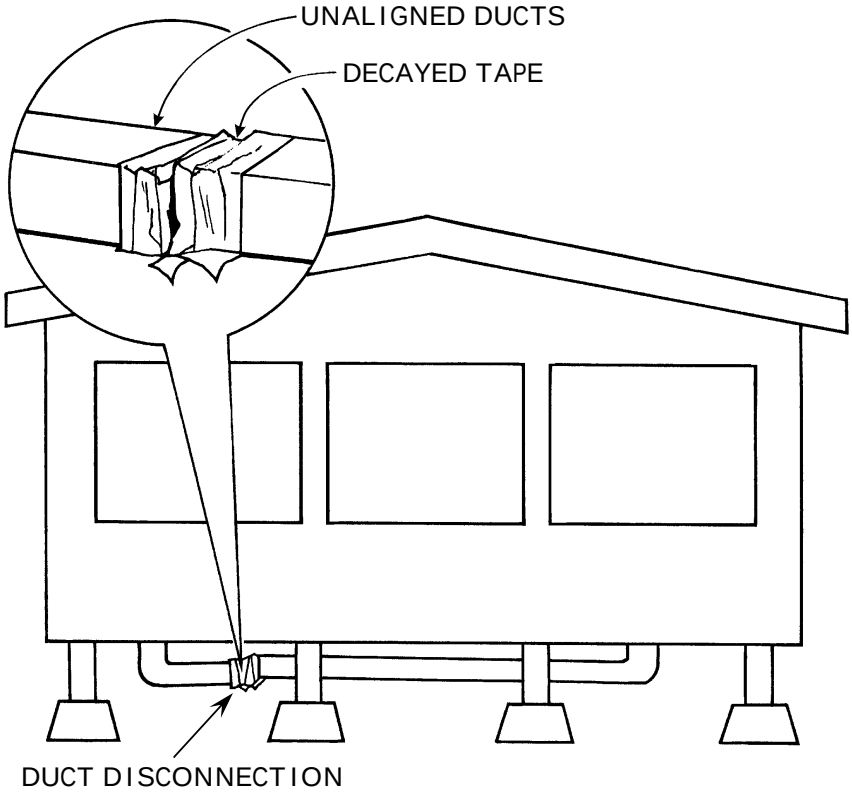

28. FLUE/VENT SYSTEM (continued)

- **Flue/Vent Pipe Connections**
  - All connections shall be secure.
  - Single-wall pipe connections shall be mechanically secured with three evenly-spaced sheet metal screws when:
    - New components are installed.
    - Existing connections are found to be loose/unsafe.
  - Double-wall pipes shall not be drilled or have screws installed, *except* as permitted/specified by the manufacturer.

29. COMBUSTION AIR

- **Adequate combustion air shall be available to the furnace in accordance with Item ~~109~~.**
- **Combustion air for open combustion appliances shall be isolated from FAU return air in accordance with Item 10.**

30. BLOWER SECTION

- **The following conditions shall be corrected as needed to ensure proper operation of the unit:**
  - Dirty blower chamber and/or fan blades.
  - Evidence of loose or unsafe wiring.
  - Bearings in need of lubrication.

31. EVAPORATOR SECTION

- **Evaporator coil shall be clean.**
- **Plumbing and wiring penetrations shall be sealed with cork tape.**

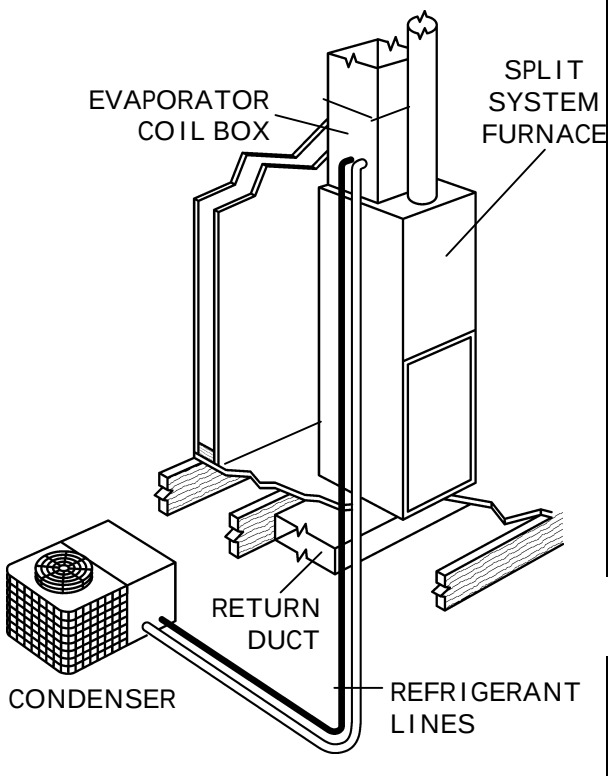

32. BURNERS

- **The furnace shall be checked for evidence of combustion problems, such as the following, and necessary corrections shall be made.**
- ***Burner Performance***
  - *When the burner(s) ignite, checks shall be made for:*
    - *Delayed ignition.*
    - *Excessive roll-out.*
  - *Burner(s) shall be examined for flame abnormalities, including:*
    - *Large yellow flame (more than 50% yellow).*
    - *Soft lazy flame or smothering flame.*
- ***Carbon and Rust***
  - *The top of the burner(s), the heat exchanger, draft hood and flue/vent pipe shall be examined for excessive amounts of carbon or rust.*

  ~~· Presence of excessive soot or rust.~~

  ~~· Abnormal flame impingement and/or odor of aldehydes.~~

  ~~· Large yellow flame, soft lazy flame, or other abnormality.~~

  ~~· Delayed ignition, or rollout ignition.~~
- **Burners and venturies shall be clean, and ports shall be unobstructed.**
- **Burners shall be correctly aligned/positioned.**
- **Burner Operation**
  - Air shutters shall be clean and adjusted for correct air/gas mixture.
  - Gas pressure shall comply with manufacturer's specifications.
  - Burner shall <u>not</u> be under- or over-fired.
  - CO in flue gas shall be within limits specified by:
    - Manufacturer's instructions, and
    - ~~The~~ LIEE ~~Policies & Procedures~~*WIS Section 1, NGAT*.

33. APPLIANCE DRAFT

- **Open Combustion Natural Draft Furnaces**
  - Drafting shall be checked and verified to be acceptable, utilizing a Visual/Smoke Draft Test in accordance with WIS Section 1.

[Graphic temporarily moved to next page]

PART 5: NEW AIR CONDITIONER INSTALLATION WHEN COMBINED HEATING AND AIR CONDITIONING SYSTEM IS REPLACED

34. SIZING CRITERIA

- **System Size**
  - Unit shall be properly sized ~~by the Contractor in accordance with ACCA Manual J and Manual S procedures.~~*in accordance with Title 24, HCD requirements, or local code, whichever is most stringent.*
  - *Exception:* The tonnage of the new system should ~~never~~ be *equal to* ~~larger~~ *or smaller* than the existing system.
- **Refrigerant Lines**
  - Shall be properly sized per manufacturer's specifications.
  - Shall provide the rated EER for the combination condenser and evaporator coil match.

35. EVAPORATOR (INDOOR) COIL AND CONDENSER (OUTDOOR) COIL

- **Split Systems**
  - An evaporator coil shall be installed which is verified to be a rated match with the condenser unit, as listed in current ARI Directory.
  - The coil label shall be visible.
  - Condenser coil and evaporator coil shall be verified to function properly.
  - An access panel shall be provided for cleaning.
- **Evaporator Coil Replacement**
  - Prior to charging, vacuum shall be drawn on the refrigerant lines to test for leaks and remove water vapor.
  - Depth of vacuum and length of time shall be as specified by the manufacturer.

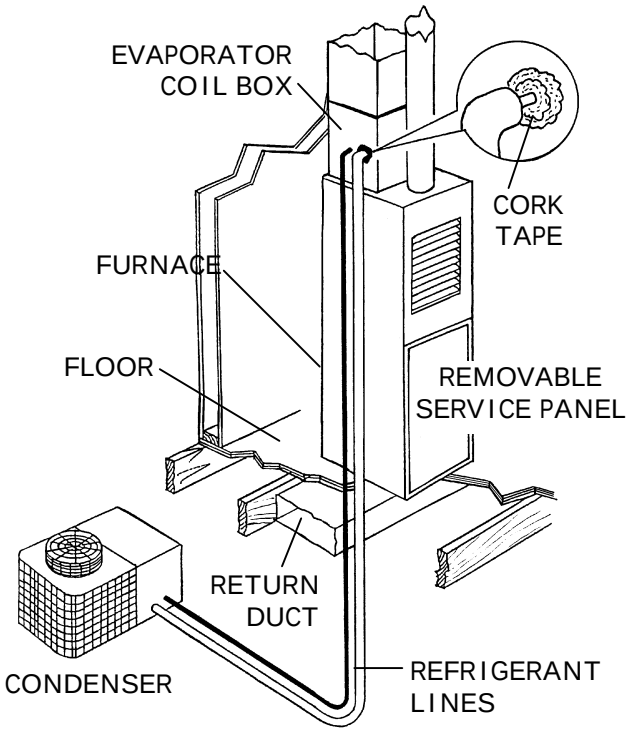

37. AIR DISTRIBUTION SYSTEM

- ***Existing Duct System***
  - *System shall be examined for leaks and disconnections and brought into conformance with LIEE duct leakage requirements.*
  - *Testing shall be performed in accordance with WIS Section 11, Duct Testing Standards, and duct repairs and sealing shall be made in accordance with WIS Section 17, Duct Sealing Standards.*
- ***Return System***
  - *Belly-Cavity and Roof-Cavity Returns*
    - *Existing belly-cavity return shall be abandoned, and a new ducted central return shall be installed.*
    - *Existing leaky roof-cavity return shall be repaired as applicable, and replaced with a new central return when repair is not feasible.*
  - *New central return shall be designed and installed in conformance with applicable standards.*
- ***Cabinet and Plenum***
  - *Components shall be mechanically attached and sealed around the perimeter (cabinet-to-duct connector, cabinet-to-plenum) using materials and methods prescribed in on Section 17.*
  - *Plumbing and wiring penetrations into the evaporator coil box and return air chamber shall be sealed with cork tape.*
- ***New Ductwork***
  - *Components shall be installed in conformance with manufacturer's instructions.*

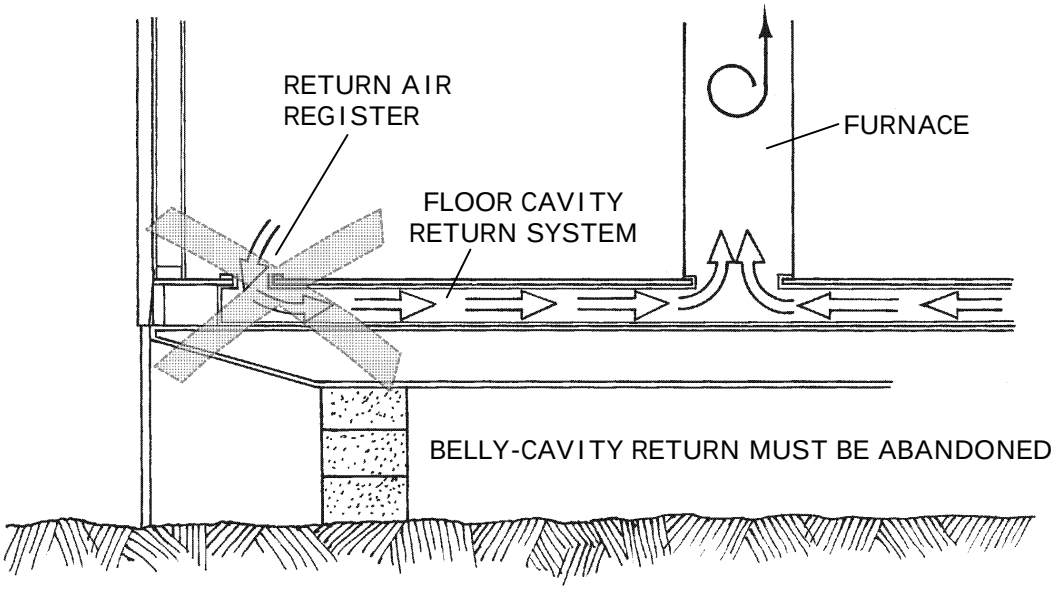

38. SELF-CONTAINED AIR CONDITIONERS

- ***Installation of a self-contained air conditioner sharing a common duct system with the furnace shall comply with the following requirements:***
  - *Automatic Dampers*
    - *Furnace shall have an automatic damper installed to prevent cold air from entering the furnace when the HVAC system is in cooling mode.*
    - *Air conditioner shall have an automatic damper installed to prevent hot air from entering the air conditioning unit when the HVAC system is in heating mode.*
  - *Function Control*
    - *Controls shall prevent the air conditioner and furnace from coming on at the same time.*

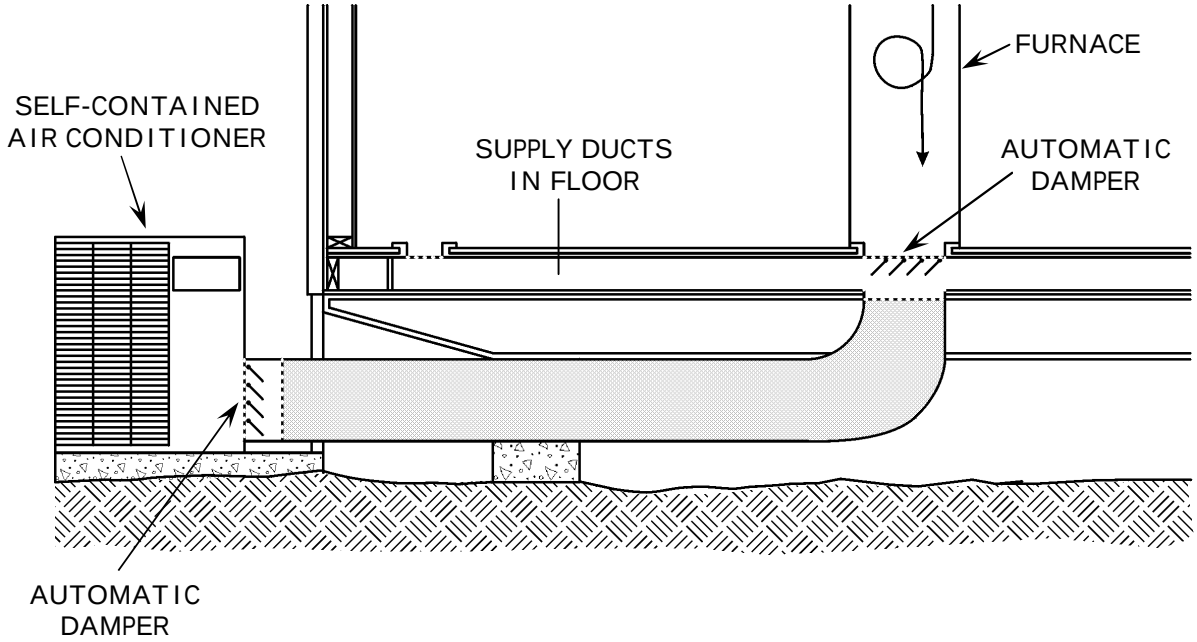

39. ELECTRICAL WIRING, GROUNDING, AND ACCESSIBILITY

- **Electrical wiring, grounding, and unit accessibility shall be in conformance with:**
  - *Manufacturer's instructions,*
  - *HUD MHCSS, Section 3280, Subpart I, and/or as applicable*
  - *Requirements of the local building department.*

40. UNIT DISCONNECTING MEANS (SERVICE DISCONNECT)

- **Outdoor Installations (Split System Condenser or Self-Contained Air Conditioner)**
  - *A disconnecting means which is capable of disconnecting the air-conditioning equipment from the circuit feeder shall be installed in conformance with NEC Article 440, Part B, Disconnecting Means.*
- **Location**
  - *The service disconnect:*
    - *Shall be located within sight from and readily accessible from the air-conditioning equipment or as required by the local jurisdiction.*
    - *May be installed on or within the air-conditioning equipment.*
- **Rating**
  - *The rating of the installed fuses or circuit breakers shall not exceed:*
    - *The overcurrent rating of the installed air-conditioning equipment.*
    - *The rating of the box in which they are located.*

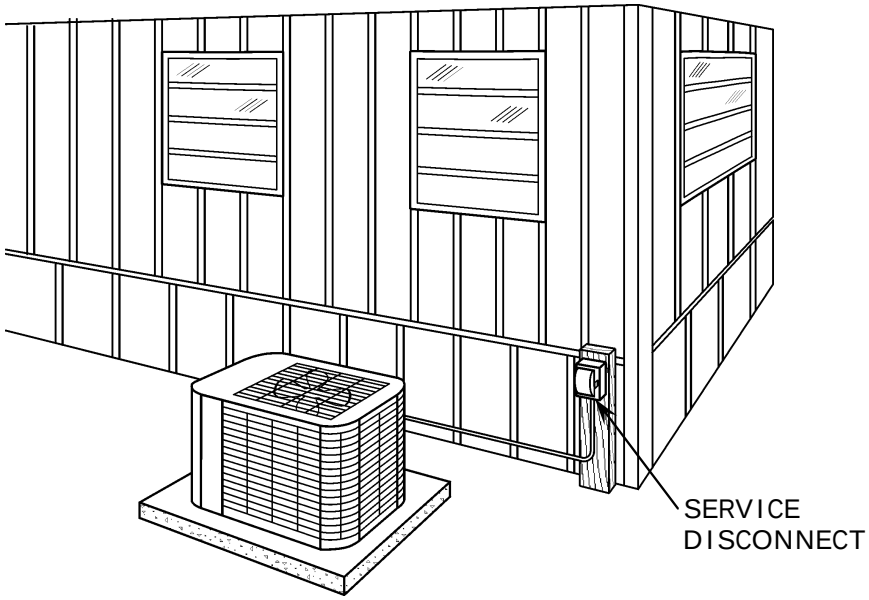

SPLIT SYSTEM REPLACEMENT CONDENSER UNIT

41. BRANCH-CIRCUIT PROTECTION

- ***General Requirements***
  - *Air-conditioning equipment shall be provided with:*
    - *Overcurrent protection per NEC Article 240.*
    - *Disconnecting means per NEC Article 440, Part B.*
    - *Branch-circuit short-circuit and ground-fault protection per NEC Article 440, Part C.*
- ***Protection Device Type***
  - *The overcurrent protection device shall be the type specified on the air-conditioning equipment nameplate (see Table 21-1).*
  - *When nameplate specifies an HACR circuit breaker, the installed circuit breaker shall be listed and labeled HACR type (suitable for use with heating, air-conditioning and refrigeration equipment).*
- ***Protection Device Rating***
  - *The branch-circuit protection device shall not exceed the maxi-mum amperage rating specified on the nameplate of the air-conditioning unit.*

TABLE 18-1: OVERCURRENT PROTECTION SELECTION GUIDE

HEAT PUMP UNIT NAMEPLATE MARKED:	OVERCURRENT PROTECTION DEVICE* MUST BE:
"Maximum Fuse Size _X_ Amps"	An _X_ Amp Fuse
"Maximum Fuse or HACR Circuit Breaker _X_ Amps"	An _X_ Amp Fuse or HACR-Type Circuit Breaker
"Maximum Fuse, HACR Circuit Breaker, or Circuit Breaker _X_ Amps"	An _X_ Amp Fuse, HACR-Type Circuit Breaker, or Standard Circuit Breaker
"Maximum Overcurrent Protection Device _X_ Amps"	An _X_ Amp Fuse, HACR-Type Circuit Breaker, or Standard Circuit Breaker

***Amperage rating of the device must not exceed that specified on the nameplate.**

42. BRANCH CIRCUIT CONDUCTORS

- ***Ampacity and Rating of Conductors***
  - *Minimum wire size shall, as applicable, be:*
    - *Selected from NEC Tables 310-16 through 310-19, or*
    - *Calculated in accordance with NEC Section 310-15.*
- ***Voltage Drop and Wire Length***
  - *Circuits shall be installed in conformance with NEC Section 210, Branch Circuits and Section 215, Feeders.*
  - *The voltage drop over the branch-circuit conductor should not exceed 2%. (See NEC Section 210-19(a) (Fine Print Note No. 4).)*
  - *In 240v circuits, the maximum conductor length should not exceed the values given in the Table 18-2.*

TABLE 18-2: MAXIMUM LENGTH OF CIRCUIT (IN FEET)

WIRE SIZE	AMPACITY OF CIRCUIT			
AWG	15	20	30	40
12	160'	120'	–	–
10	250'	190'	130'	–
8	300'	225'	150'	115'

Notes:

- ***The table is based on a 4.6v drop (230v X 2% = 4.6v).***
- ***The table applies to non-plated (uncoated) solid wire copper conductors at 75°C (167°F) ambient temperature.***
- ***For alternate conditions or conductors, use applicable CEC Tables (e.g., see Article 210, "Branch Circuits"; Article 215, "Feeders"; and Chapter 9, Table 8, "Conductor Properties").***

43. MOUNTING OF OUTDOOR EQUIPMENT

- ***Ground Mount***
  - *Air-conditioning equipment shall be installed in conformance with UMC Section 1106.0.*
  - *The unit shall rest on concrete or other approved base extending at least 3" above the adjoining ground level.*
- ***Protection***
  - *Units subject to mechanical damage shall be protected in conformance with UMC Section 308.*
  - *Unit shall be attached to base with seismic straps, when required by applicable code.*
- ***Overhead Clearance***
  - *Overhead clearance shall be provided in conformance with manufacturer's specifications and local code.*

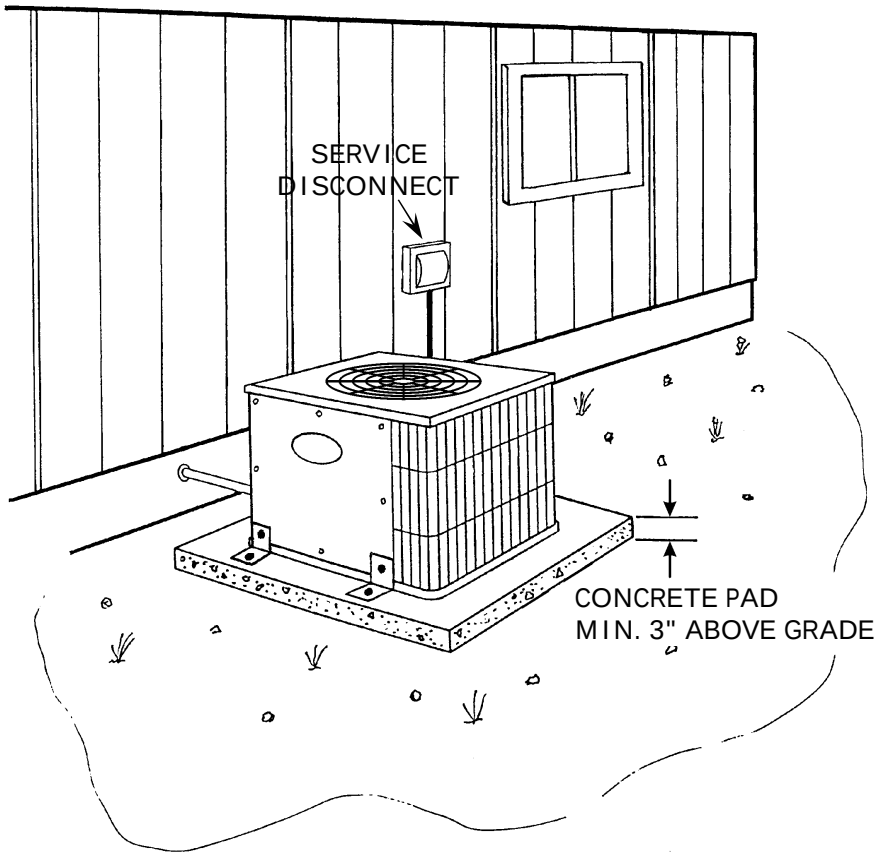

44. FUEL-GAS PIPING

- ***All Installations***
  - *Gas lines, fittings and valves shall be free of leaks.*
  - *New lines shall be pressure-tested.*

45. COMBUSTION APPLIANCE REQUIREMENTS

- ***Flue and Vent Systems***
  - *New flue/vent system shall be selected, installed and secured in conformance with listing specifications, manufacturer's instructions, and HCD requirements.*
- ***Combustion Air***
  - *Combustion air for installed units, and all other appliances sharing the same space/enclosure, shall be supplied in conformance with manufacturer's instructions and HCD requirements.*
  - *Combustion air vents shall be free of obstructions that interfere with proper venting.*

ELECTRONIC LEAK DETECTOR

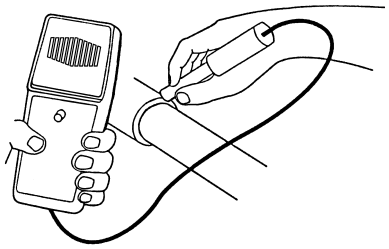

BUBBLE LEAK DETECTION

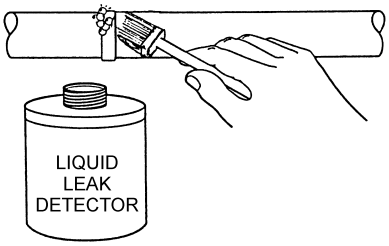

METHODS FOR FINDING LEAKS IN
GAS LINES, FITTINGS, AND VALVES

~~39. ELECTRICAL WIRING~~

~~-All electrical wiring shall be installed in conformance with manufacturer's instructions, HUD MHCSS Section 3280, Subpart I, and, as applicable, requirements of the local building department.~~

~~-Service Receptacle~~

~~·A 120-volt service receptacle shall:~~

~~-Be located within 25' of the equipment.~~

~~-Be on the same level as the equipment.~~

~~-Not be connected on the load side of the disconnect.~~

~~-Grounding~~

~~·Exposed noncurrent-carrying metal parts shall be grounded in compliance with CEC Article 250, Part J., Grounding Conductors (Sections 250-91 through 250-99), and Part K., Grounding Conductor Connections (Sections 250-112 through 250-119).~~

~~·Parts of the equipment capable of carrying electrical current shall be grounded to the service ground by a continuous:~~

~~-metal raceway,~~

~~-wire, or~~

~~-appropriate conductor in a cable assembly.~~

~~·Connections and splices in the grounding conductor shall:~~

~~-Be made in compliance with the CEC and HCD.~~

~~-Provide a continuous path to the service ground with all disconnects and controllers in the open position.~~

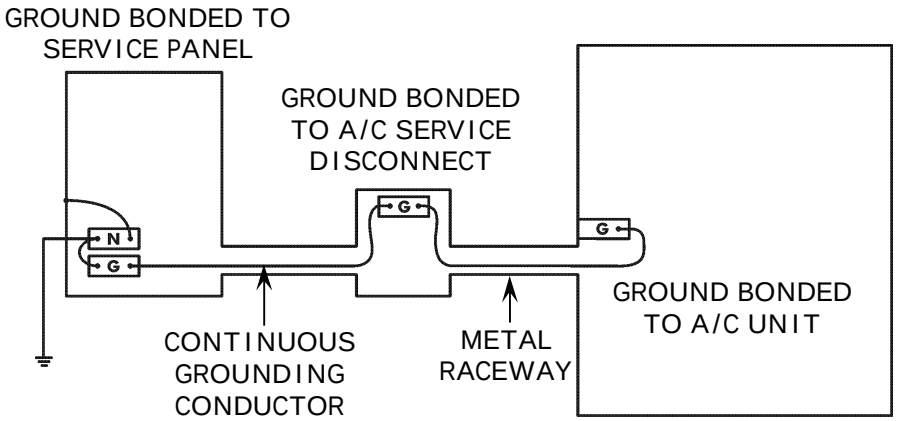

CONTINUOUS GROUNDING PATH FROM SERVICE PANEL TO A/C UNIT PROVIDED BY CONDUCTOR OR RACEWAY

~~40. UNIT DISCONNECTING MEANS (SERVICE DISCONNECT)~~

~~**-All Installations**~~

~~· A disconnecting means which is capable of disconnecting the air-conditioning equipment from the circuit feeder shall be installed in conformance with NEC Article 440, Part B, Disconnecting Means.~~

~~**-Location**~~

~~· The service disconnect:~~

~~-Shall be located within sight from and readily accessible from the air-conditioning equipment or as required by the local jurisdiction.~~

~~-May be installed on or within the air-conditioning equipment.~~

~~**-Rating**~~

~~· The rating of the installed fuses or circuit breakers shall not exceed:~~

~~-The overcurrent rating of the installed air-conditioning equipment.~~

~~-The rating of the box in which they are located.~~

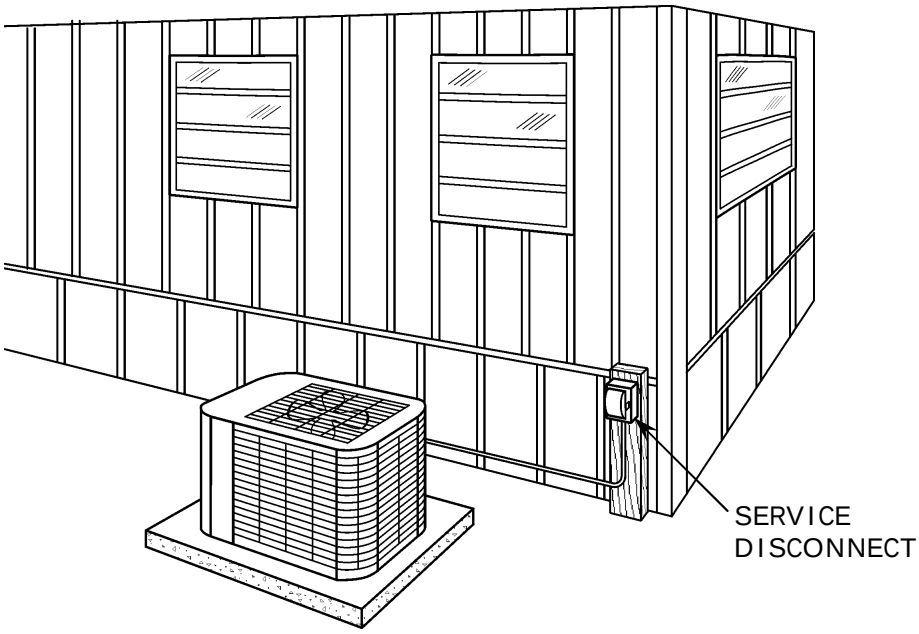

SPLIT SYSTEM REPLACEMENT CONDENSER UNIT

~~41. BRANCH-CIRCUIT PROTECTION~~

~~-General Requirements~~

~~· Air-conditioning equipment shall be provided with:~~

~~-Overcurrent protection per NEC Article 240.~~

~~-Disconnecting means per NEC Article 440, Part B.~~

~~-Branch-circuit short-circuit and ground-fault protection per NEC Article 440, Part C.~~

~~-Protection Device Type~~

~~· The overcurrent protection device shall be the type specified on the air-conditioning equipment nameplate (see Overcurrent Protection Selection Guide below).~~

~~· When nameplate specifies an HACR circuit breaker, the installed circuit breaker shall be listed and labeled HACR type (suitable for use with heating, air-conditioning and refrigeration equipment).~~

~~-Protection Device Rating~~

~~· The branch-circuit protection device shall not exceed the maxi-mum amperage rating specified on the nameplate of the air-conditioning unit.~~

~~OVERCURRENT PROTECTION SELECTION GUIDE~~

~~HEAT PUMP UNIT NAMEPLATE MARKED:~~	~~OVERCURRENT PROTECTION DEVICE* MUST BE:~~
~~"Maximum Fuse Size _X_ Amps"~~	~~An _X_ Amp Fuse~~
~~"Maximum Fuse or HACR Circuit Breaker _X_ Amps"~~	~~An _X_ Amp Fuse or HACR-Type Circuit Breaker~~
~~"Maximum Fuse, HACR Circuit Breaker, or Circuit Breaker _X_ Amps"~~	~~An _X_ Amp Fuse, HACR-Type Circuit Breaker, or Standard Circuit Breaker~~
~~"Maximum Overcurrent Protection Device _X_ Amps"~~	~~An _X_ Amp Fuse, HACR-Type Circuit Breaker, or Standard Circuit Breaker~~

~~*Amperage rating of the device must not exceed that specified on the nameplate.~~

~~42. BRANCH CIRCUIT CONDUCTORS~~

~~-Ampacity and Rating of Conductors~~

~~·Minimum wire size shall, as applicable, be:~~

~~-Selected from NEC Tables 310-16 through 310-19, or~~

~~-Calculated in accordance with NEC Section 310-15.~~

~~-Voltage Drop and Wire Length~~

~~·Circuits shall be installed in conformance with NEC Section 210, Branch Circuits and Section 215, Feeders.~~

~~·The voltage drop over the branch-circuit conductor should not exceed 2%. (See NEC Section 210-19(a) (Fine Print Note No. 4).)~~

~~·In 240v circuits, the maximum conductor length should not exceed the values given in the table below.~~

~~MAXIMUM LENGTH OF CIRCUIT (IN FEET)~~

~~WIRE SIZE~~	~~AMPACITY OF CIRCUIT~~				
~~AWG~~	~~15~~	~~20~~	~~30~~	~~40~~	~~50~~
~~12~~	~~160'~~	~~120'~~	~~80'~~	~~–~~	~~–~~
~~10~~	~~250'~~	~~190'~~	~~130'~~	~~95'~~	~~–~~
~~8~~	~~300'~~	~~225'~~	~~150'~~	~~115'~~	~~90'~~

~~Notes:~~

- **~~The table is based on a 4.6v drop (230v X 2% = 4.6v).~~**
- **~~The table applies to non-plated (uncoated) solid wire copper conductors at 75°C (167°F) ambient temperature.~~**

~~For alternate conditions or conductors, use applicable NEC Tables (e.g., see Article 210, "Branch Circuits"; Article 215, "Feeders"; and Chapter 9, Table 8, "Conductor Properties").~~

~~43. SELF-CONTAINED AIR CONDITIONERS~~

~~**Installation of self-contained air conditioner sharing a common duct system with heating system shall comply with the following requirements:**~~

- ~~Furnace shall have automatic damper installed to prevent cold air from entering when system is in cooling mode.~~
- ~~Air conditioner shall have an automatic damper installed to prevent hot air from entering when system is in heating mode.~~
- ~~Controls shall prevent air conditioner and furnace from operating simultaneously.~~

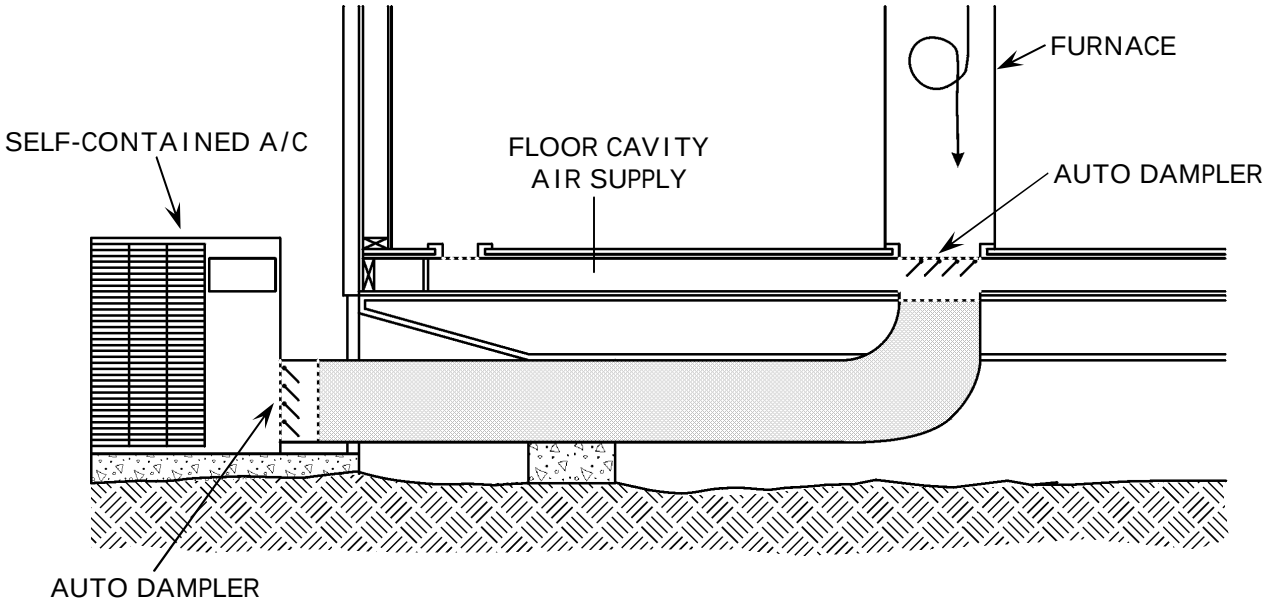

~~44. MOUNTING OF EQUIPMENT~~

~~-Ground Mount~~

~~· Air-conditioning equipment shall be installed in conformance with UMC Section 1504.~~

~~· The unit shall rest on concrete or other approved base extending at least 3" above the adjoining ground level.~~

~~-Protection~~

~~· Units subject to mechanical damage shall be protected in conformance with UMC Section 508.~~

~~· Unit shall be attached to base with seismic straps.~~

~~-Overhead Clearance~~

~~· Overhead clearance shall be provided in conformance with manufacturer's specifications and local code.~~

~~45. PACKAGE UNIT FUEL-GAS PIPING~~

~~**-Gas lines, fittings, and valves shall be in conformance with Item 15.**~~

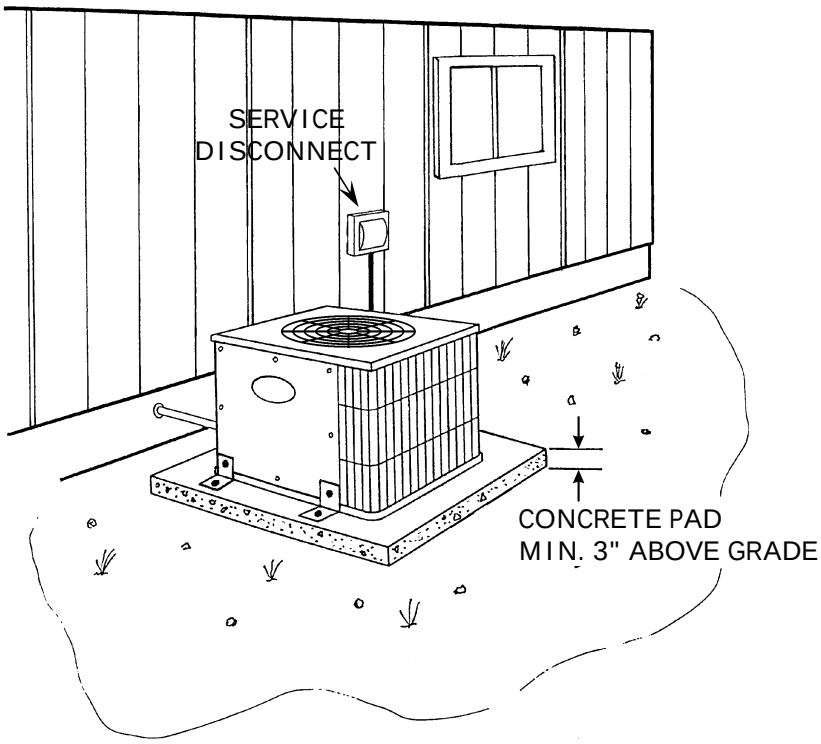

PART 6: WALL THERMOSTAT INSTALLATION

46. THERMOSTAT INSTALLATION

- **Location and Mounting**
  - New thermostat shall be installed at existing location unless affected by drafts, heat from direct sun, or adjacent appliances.
  - Thermostat installed in a new location:
    - Shall be mounted with the top of thermostat 60" above the floor when occupants are not handicapped.
    - May me installed as low as 48" above the floor when an occupant uses a wheelchair.
  - Thermostat shall be located away from direct sunlight, doors, windows, return/supply air, appliances, and sources of electrical interference.
  - Mounting bracket shall be securely attached to wall with screws for wood, or appropriate anchors for drywall and plaster.
  - Any holes or damage to wall from installation or removal of thermostat shall be repaired in a workmanlike manner.
- **Wiring**
  - All wiring shall be a minimum of 18 gauge and conform to manufacturer's specifications and ~~local codes~~*HCD requirements.*.
  - ~~All wiring shall be installed inside wall cavities when possible.~~
  - ~~When not inside a wall,~~ Exposed wiring shall be enclosed in a raceway.

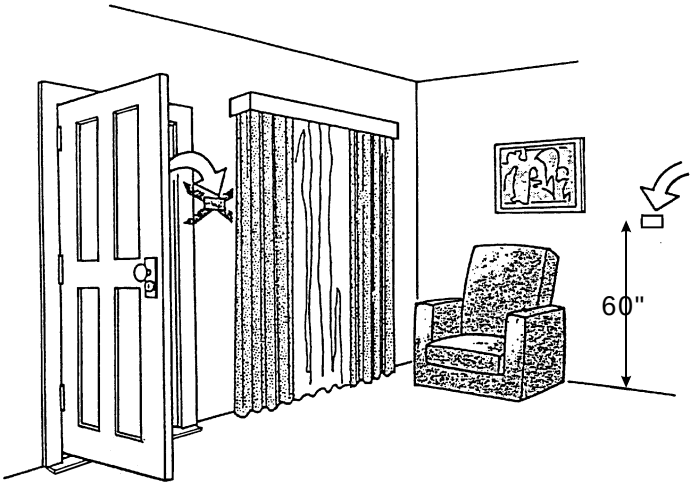

~~PART 8: CATASTROPHIC DUCT LEAKS AND DISCONNECTIONS~~

~~52. DUCTWORK INSPECTION~~

~~-The duct system shall be inspected for damage, disconnections and catastrophic leaks.~~

~~53. REPLACEMENT OF DAMAGED DUCTS~~

~~-Replacement Ducts~~

~~· Ducts shall be sized, installed and connected as prescribed in this section, HUD MHCSS Section 3280.715, and HCD regulations.~~

~~-Duct Supports~~

~~· All replacement ducts shall be installed and supported above the ground in conformance with manufacturer's instructions.~~

~~· Flexible ducts shall be supported at intervals not exceeding 4'.~~

~~-Metal support straps shall be at least 1-1/2" wide.~~

~~-Straps shall not constrict the internal diameter of the duct.~~

~~-Sag shall not exceed 2" between supports.~~

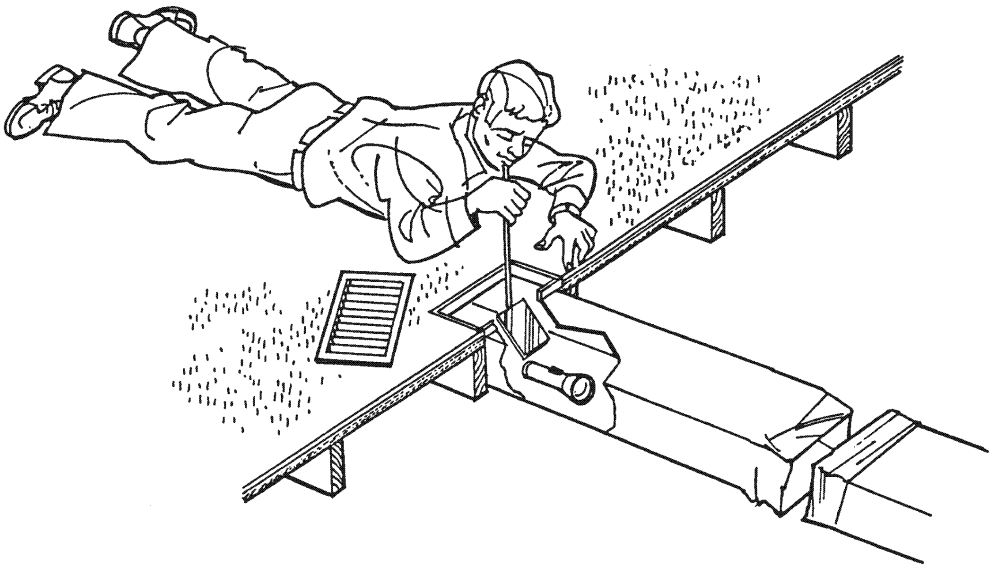

METHOD TO INSPECT FOR LEAKS AND DAMAGE
AND TO VIEW COMPLETED REPAIRS

~~54. SEALING WITH DUCT MASTIC~~

- ~~**Mastic shall be installed as prescribed by manufacturer:**~~
  - ~~With proper surface preparation/cleaning.~~
  - ~~Within temperature and moisture limitations.~~
  - ~~With proper setup time.~~
- ~~**Application**~~
  - ~~Gaps up to 1/8": Duct mastic alone may be used.~~
  - ~~Gaps over 1/8": Mastic shall be reinforced with fiberglass mesh tape.~~

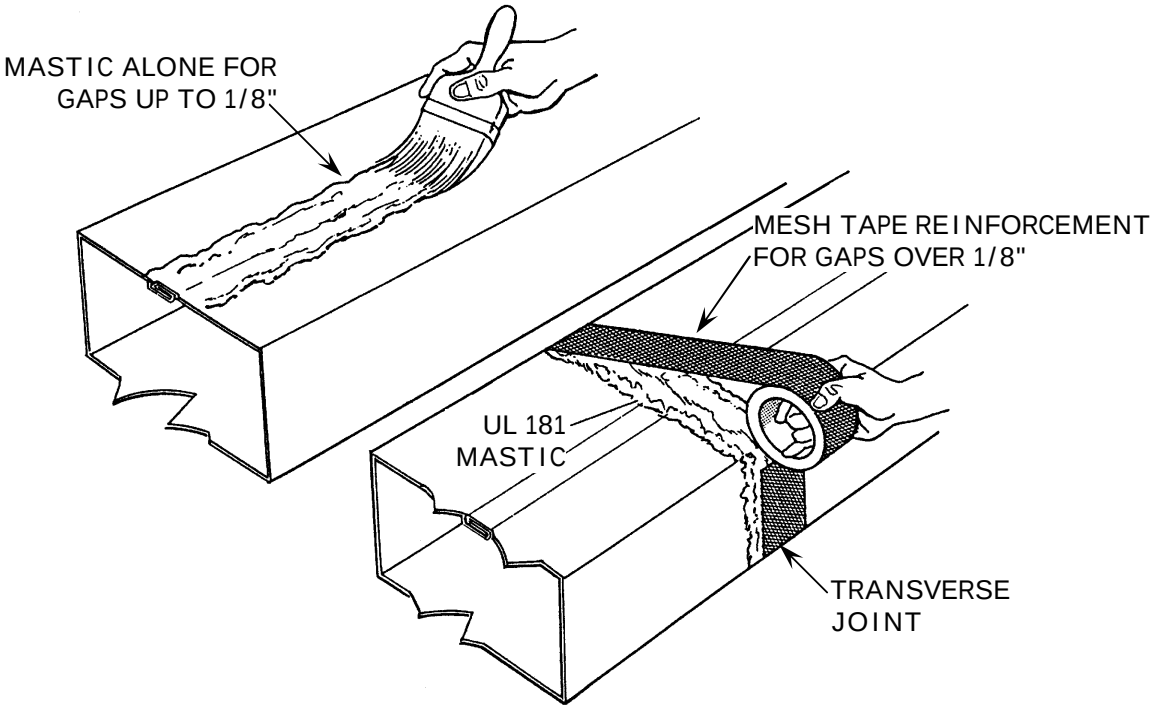

~~55. SEALING WITH PRESSURE-SENSITIVE TAPE~~

- ~~**Tapes shall be installed as prescribed by the manufacturer:**~~
  - ~~With proper surface preparation/cleaning.~~
  - ~~With recommended amount of pressure applied.~~
  - ~~Within temperature and moisture limitations.~~
- ~~**Application**~~
  - ~~At least three wraps of tape shall be applied when sealing:~~
    - ~~Joints in round or rectangular metal ducts.~~
    - ~~Flexible duct core-to-fitting attachments (with a drawband also installed to secure a nonmetallic flexible duct core).~~
    - ~~Vapor barrier (jacket) splices on flexible ducts.~~
  - ~~Successive wraps of tape shall be staggered and should overlap by 50 to 75% of the tape width.~~
- ~~**Gaps wider than 1/4" sealed with tape:**~~
  - ~~Duct mastic shall be applied at least 1/8" thick over the installed tape to provide additional strength and durability.~~
  - ~~Mastic shall extend beyond the width of the tape.~~

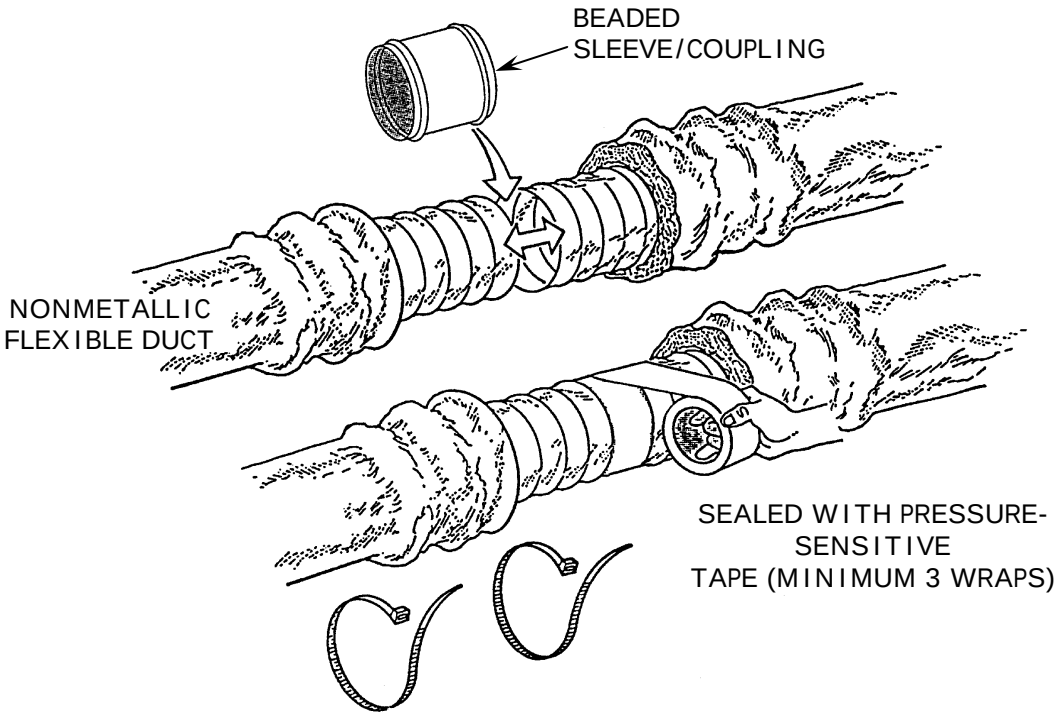

~~56. REPAIRING AND SEALING FLEXIBLE DUCTS~~

~~-Attachment of Nonmetallic Duct Core to *Beaded* Fitting~~

- ~~At least 2" of duct core shall be pulled onto fitting, with at least 1" extending past the bead.~~
- ~~Fitting must provide additional 1" wide area beyond duct core for application of tape or externally-applied mastic.~~
- ~~A drawband (or metal clamp) shall be:~~
  - ~~Placed behind the bead to secure the core onto the fitting.~~
  - ~~Tightened with an adjustable tensioning tool.~~

~~-Attachment of Nonmetallic Duct Core to Existing *Non-beaded* Fitting~~

- ~~Duct core shall be secured to the fitting with internally-placed mastic and a drawband, or~~
- ~~The core's wire coil shall be secured to the fitting with evenly-spaced #8 sheet metal screws installed through 181B-FX tape:~~
  - ~~3 screws for diameters up to 12".~~
  - ~~5 screws for diameters over 12".~~

~~-Flexible Metallic Duct Connections~~

- ~~Core shall be mechanically secured with evenly-spaced #8 sheet metal screws:~~
  - ~~3 screws for diameters under 12".~~
  - ~~5 screws for diameters 12" and over.~~

~~-Sealants shall be applied as prescribed in this section.~~

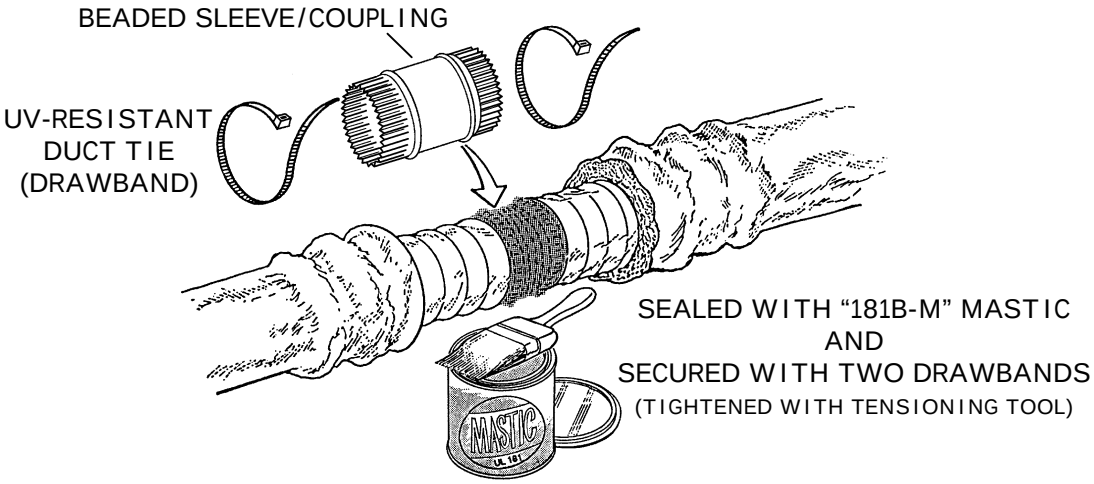

~~55. REPAIR AND SEALING FLEXIBLE DUCTS (continued)~~

~~-Insulation and Vapor Barrier~~

- ~~Insulation shall completely cover the duct core and fitting.~~
- ~~The vapor barrier (jacket) shall be pulled back over the insulation.~~
  - ~~-Where two pieces of duct are joined (splices), the two jackets shall overlap at least 2".~~
  - ~~-Vapor barrier shall be secured/sealed with a drawband and/or three staggered wraps of pressure-sensitive tape.~~

~~-Core Repairs~~

- ~~Holes/damage in the duct core shall be repaired by removal of the damaged section and insertion of a sleeve/coupling.~~

~~-Jacket Repairs~~

- ~~Rips and holes in the vapor barrier shall be repaired with pressure-sensitive tape or with mastic and mesh tape.~~
- ~~When duct core is air permeable:~~
  - ~~-Ends of the jackets shall be overlapped at least 2" at splices and shall be secured and sealed at all joints with:~~
    - ~~181B-FX pressure-sensitive tape, or~~
    - ~~Drawbands, mastic, and mesh tape.~~
  - ~~-All breaches in the outer vapor barrier shall be similarly sealed.~~

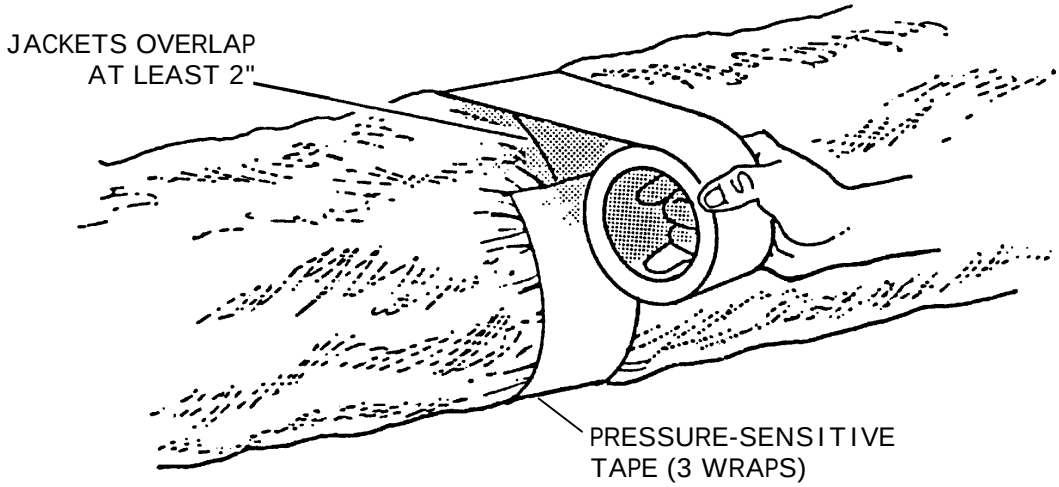

~~57. REPAIRING AND SEALING RIGID METAL DUCTS~~

~~-Rigid Metal Disconnections~~

- ~~Disconnected components shall be rejoined, overlapped when possible, mechanically secured, and sealed with duct tape and/or mastic.~~
- ~~Connections shall be secured with equally-spaced #8 or larger sheet metal screws.~~
  - ~~Round ducts:~~
    - ~~At least 3 screws for duct diameters up to 12".~~
    - ~~5 screws for diameters over 12".~~
  - ~~Rectangular ducts: At least 1 screw per side.~~
- ~~When disconnected components cannot be rejoined completely:~~
  - ~~The gap shall first be mechanically secured (e.g., with metal straps fastened across the gap) and then sealed.~~
  - ~~Gaps up to 3/8" wide may be sealed with butyl tape and/or duct mastic applied at least 1/8" thick.~~
    - ~~Gaps up to 1/8" may be sealed with butyl tape or mastic.~~
    - ~~Gaps 3/16" to 1/4" may be sealed with butyl tape alone, or with mastic and mesh tape.~~
    - ~~Gaps 5/16" to 3/8" shall be sealed with butyl tape covered by mastic, or with mastic and mesh tape.~~
  - ~~Gaps 7/16" or wider shall be:~~
    - ~~Repaired with sheet metal that is mechanically secured with screws.~~
    - ~~Sealed with UL listed metallic duct tape or duct mastic.~~

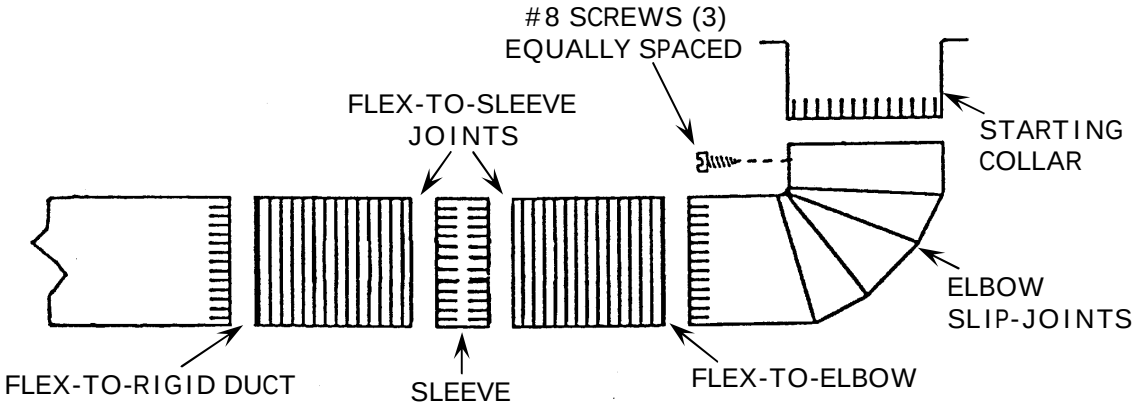

- MASTIC ALONE ON ELBOW SLIP JOINTS & OTHER TAPS UP TO 1/8"
- MASTIC & MESH, OR PRESSURE-SENSITIVE TAPE, ON GAPS OVER 1/8"

~~58. REGISTER BOOT/RISER REPAIR AND SEALING~~

- ~~**Duct boots and risers that are very loose or detached from the floor shall be reattached and mechanically secured (e.g., with screws, staples, or nails).**~~
- ~~**Boot/riser termination shall be then be sealed to the floor.**~~
  - ~~Gaps up to 1/8" wide may be sealed with:~~
    - ~~Elastomeric caulk (e.g., polyurethane or silicone), or~~
    - ~~Duct mastic applied at least 1/8" thick.~~
  - ~~Gaps over 1/8" wide:~~
    - ~~Gaps shall be sealed when possible with butyl tape, or with duct mastic reinforced with mesh tape.~~
    - ~~Elastomeric caulk and metallic tape may be used together where a thinner repair is required.~~
- ~~**Risers that are very loose or disconnected from the trunk shall be re-attached, secured, and sealed (e.g., with butyl tape).**~~

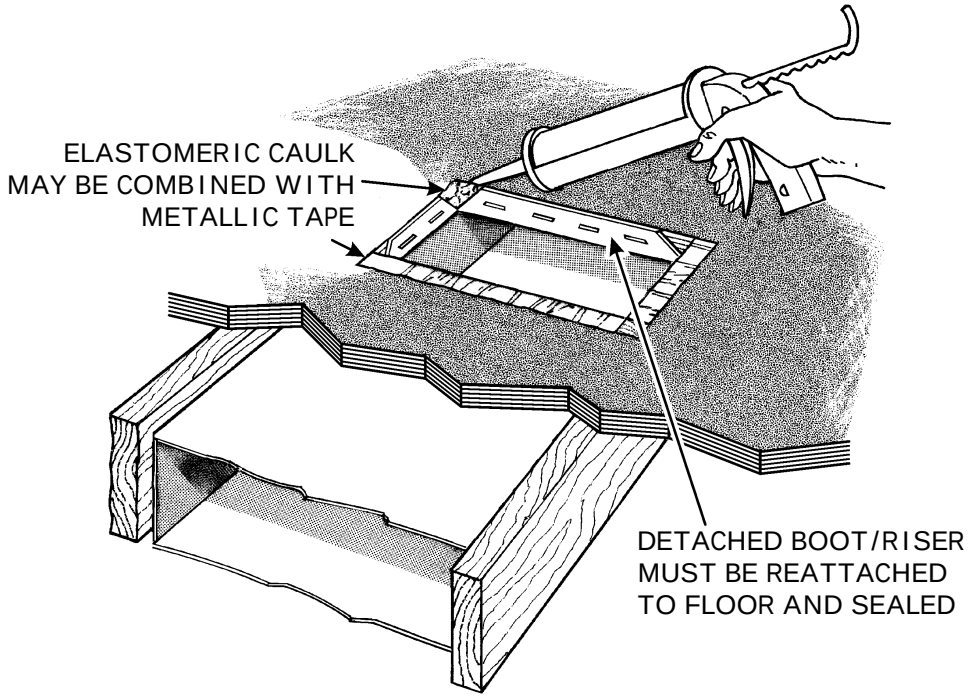

~~59. REPAIRING LEAKY DUCT TERMINATIONS~~

- ~~**A duct termination (dead end) that is open shall be:**~~
  - ~~Repaired and sealed, or~~
  - ~~Securely blocked (e.g., with a sheet metal dam) and permanently sealed.~~
- ~~**Sheet Metal Dams**~~
  - ~~Dams shall be:~~
    - ~~Placed as far from the register opening as feasible.~~
    - ~~Attached securely (mechanically when possible).~~
  - ~~Dams may be attached/sealed with:~~
    - ~~Butyl tape, or~~
    - ~~Mastic and mesh tape.~~

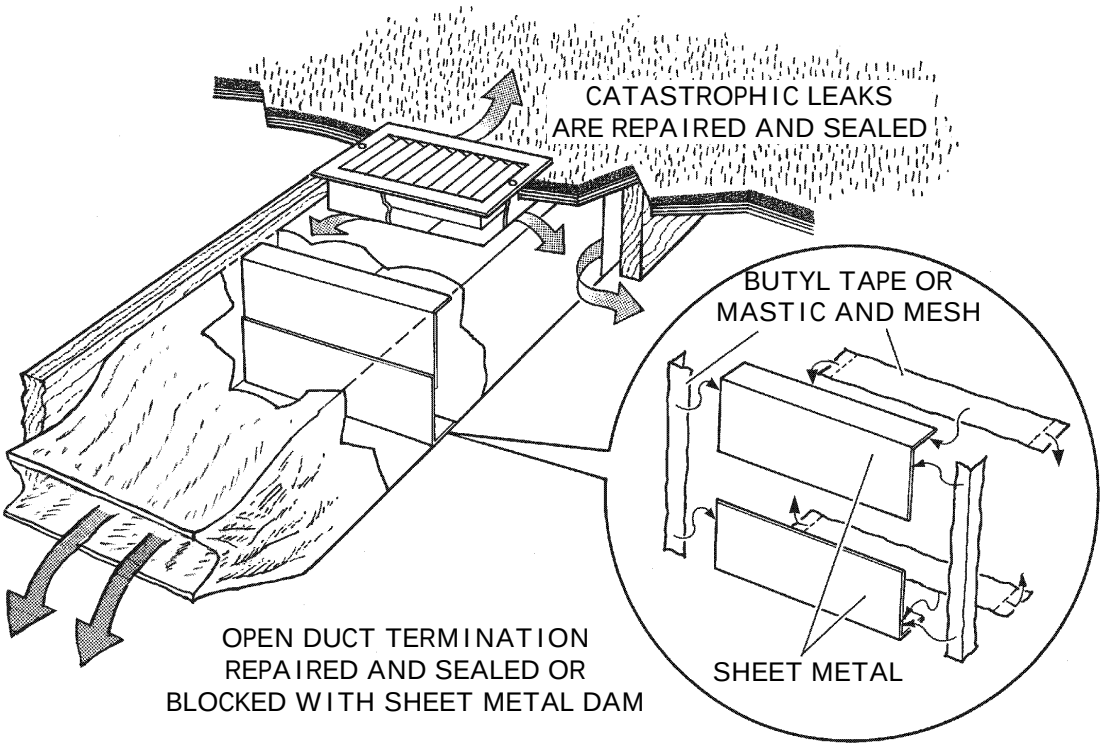

~~60. CROSSOVER DUCTS~~

- ~~**Disconnections shall be reconnected, mechanically secured, and sealed.**~~
- ~~**Other major leaks that are repairable shall be repaired and sealed.**~~
- ~~**Disconnected and damaged duct components that cannot be feasibly repaired shall be replaced.**~~
- ~~**Ducts shall be installed, secured, supported, and sealed as prescribed in this section.**~~
  - ~~Flexible ducts shall be sealed with UL 181B listed and labeled tapes and mastics.~~
  - ~~All ducts shall be installed above the ground in accordance with Item 52.~~

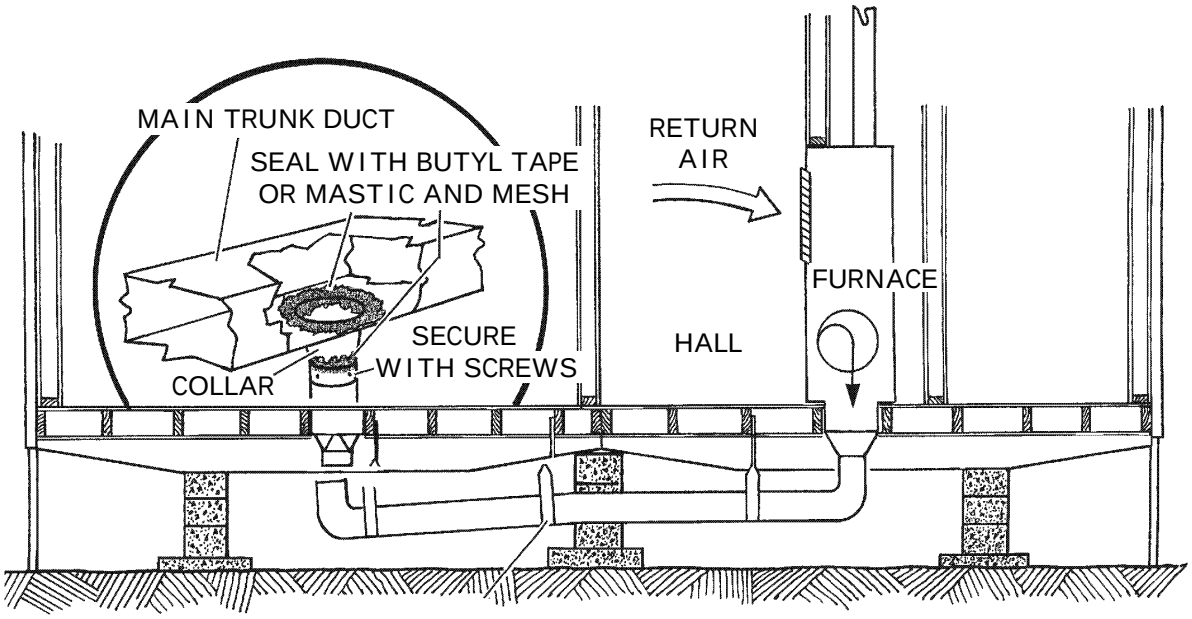

DISCONNECTED/DAMAGED CROSSOVER DUCT REPIRED/REPLACED,
LOOSE CONNECTION TO TRUNK REPAIRED AND SEALED

NATURAL GAS WATER HEATER REPLACEMENT STANDARDS

1. MATERIALS

- **Water Heaters**
  - Natural gas-fueled storage *or instantaneous (tankless)* type.
  - Minimum Energy Factor (EF) ~~of 0.60, and~~*shall be in* compliance with Title 24 energy efficiency requirements*, per Table 25-1*.
  - Listed and labeled in conformance with HCD regulations.
  - Manufactured to ANSI Z21.10.1 or ANSI Z21.10.3.
- **Vent Systems**
  - UL listed vent connectors, components, and Type B vent pipes.
  - Nonmetallic systems shall conform to ASTM D 1785 and D 2665.
- **Gas Piping and Valves**
  - Gas valves shall be listed (e.g., by UL) and AGA or CSA certified.
  - Flexible connectors shall be listed (e.g., by IAPMO) epoxy-coated or stainless steel units.
  - Fuel-gas gas piping shall comply with ~~1998~~ *2001* CMC Chapter 13.
  - Copper gas lines and butt-soldered joints not allowed.

2. WARRANTY

- **Minimum five (5) year written manufacturer's warranty.**
- **Minimum one (1) year written labor and parts warranty.**

TABLE 25-1: MINIMUM ENERGY FACTOR

WATER HEATER TYPE	VOLUME (GALLONS)	MINIMUM EF
Gas Storage	30	0.61
	40	0.59
	50	0.58
Gas Instantaneous	—	0.62

3. GENERAL REQUIREMENTS

- **A permit for the installation shall be obtained from and finalized by HCD.**
- **Installation shall be in conformance with:**
  - Product listing.
  - Manufacturer's instructions and specifications.
  - The California Mechanical Code (CMC), California Plumbing Code (CPC), or as specified by HCD.
- **Orifice shall be verified to be sized for natural gas.**

4. WATER HEATER SIZING

- **Replacement water heater capacity, the First Hour Rating, shall comply with the greater of:**
  - Manufacturer's sizing recommendations, or
  - HCD requirements, and
  - S*torage units s*hall be no less than the 2000 Uniform Plumbing Code (UPC) minimum guidelines, as shown in the table below.

5. LOCATION

- **Clearances shall be in compliance with listing requirements, manufacturer's instructions, and HCD regulations.**
- **Location shall be structurally sized/constructed to safely support the weight of the tank.**

MINIMUM CAPACITY FOR WATER HEATERS
FIRST HOUR RATING TABLE
BASED ON THE
2000 UNIFORM PLUMBING CODE (UPC) TABLE 5-1

Number of Bathrooms	1 to 1.5			2 to 2.5				3 to 3.5			
Number of Bedrooms	1	2	3	2	3	4	5	3	4	5	6
First Hour Rating*	42	54	54	54	67	67	80	67	80	80	80

***First Hour Rating, the water heating capacity expressed in gallons, is the amount of hot water the heater can supply per hour (starting with a tank full of hot water). The First Hour Rating is shown on the yellow EnergyGuide label.**

© RHA • 7/18/05 Draft