SECTION 18 PREFACE

FOR

NATURAL GAS CENTRAL FORCED AIR HEATING SYSTEM REPAIR AND REPLACEMENT

1. FURNACE REPAIR/REPLACEMENT ~~INSTALLATION~~ POLICIES

1.1. Furnace repair or replacement may be provided only when the appliance ~~is non-operational or~~ fails NGAT, and correction cannot be achieved with Service/Adjustment by utility gas service personnel (or their designated representative). Note that NGAT fails include the following two scenarios:

- *The furnace is non-operable.*
- *No furnace is present and the household uses another gas appliance for space heating.*

1.2. A central furnace may be replaced only if the cost of repairing the unit would be more than 50% of the cost of replacement.

~~*1.1.*~~*1.3.* Furnace replacements and major furnace repairs may be provided only if the residence is owner-occupied. *Service/*Adjustment ~~and minor repairs~~ may also be conducted in ~~non-owner~~*renter*-occupied homes.

~~*1.2.*~~*1.4.* Furnace repairs and replacements will be provided only if the fuel used by the furnace is supplied by the utility providing LIEE Program services.

~~*1.3.*~~*1.5.* Furnace replacement will not include hazardous material abatement, major structural alteration, concrete work, painting, or floor covering.

1.6. A central furnace may be repaired only if the cost of repairing the unit would be less than 50% of the cost of replacement. A wall, floor, or direct vent furnace may be repaired only if the cost of repairing the unit would be less than 25% of the cost of replacement.

~~*1.4.*~~*1.7.* An air conditioning unit may be replaced in conjunction with a furnace replacement if:

- The unit being replaced is a combined forced air heating and central AC package system, also referred to as a dual-pack (i.e., the AC and furnace is manufactured as one unit and is housed in a single sheet metal housing); or
- The furnace being replaced is part of a split forced air heating and AC system and the AC evaporative coil and/or the outside system cannot be matched with the new furnace.

© RHA • 1/1/04 *(Rev. 9/15/05) (Rev. 10/6/05)*

~~1.5.~~*1.8.* Replaced units must be de-manufactured in compliance with all laws and regulations.

~~1.6.~~*1.9.* Installer must have C-20 HVAC license.

1.10. A programmable thermostat may be installed only if (a) a central furnace or central air conditioner is replaced (a programmable thermostat is required by Title 24 when a central heating system and/or a central air conditioner is replaced), or (b) a central furnace or central air conditioner is repaired and a properly-functioning thermostat is not present.

1.11. A furnace will not be replaced is Title 24 provisions relating to alterations cannot be satisfied.

1.12. A furnace that is not abandoned or inaccessible and cannot be made operable through Servicing fails NGAT.

2. PROGRAMMABLE THERMOSTAT INSTALLATION POLICIES

2.1. Programmable thermostats ~~are~~ *may be* installed only ~~in conjunction with~~*if a* ~~central~~ furnace *or central air conditioner is* ~~repair/replacemement~~ *replaced* ~~and only when required by state or local code as part of furnace repair/replacement~~. *(A programmable/setback thermostat is required by Title 24 when a central heating system and/or central air conditioner is replaced.)*

2.2. Before installing a programmable thermostat, Contractor shall explain ~~their~~ *its* operation and provide the customer an opportunity to refuse the measure.

3. CENTRAL SYSTEM ~~AIR~~ *HVAC* FILTER INSTALLATION POLICIES

3.1. *HVAC* filters *may be replaced* ~~are installed~~ only ~~in conjunction~~ *as part of* ~~with~~ central ~~forced air heating system~~*furnace* repair *or central air conditioner replacement*.

3.2. Contractors must show customers how to remove, clean, and re-install the filters.

SECTION 25 PREFACE

FOR

NATURAL GAS WATER HEATER REPLACEMENT

1. *WATER HEATER REPAIR/REPLACEMENT* POLICIES

1.1. Water heater repair or replacement may be provided only when the appliance ~~is non-operational or~~ fails NGAT, and correction cannot be achieved with Service/Adjustment by utility gas service personnel (or their designated representative).[1]

1.2. A water heater may be replaced only if the cost of repairing the unit would be more than 50% of the cost of replacement.

~~1.1.The replacement water heater must have an energy factor of 0.60 or greater.~~

1.3. Water heater repair or replacement may be provided only if the residence is owner-occupied. Service/Adjustment may also be conducted in renter-occupied homes.

1.4. Water heater repairs and replacements will be provided only if the fuel used by the ~~furnace~~ appliance is supplied by the utility providing ~~the weatherization~~ LIEE Program services.

1.5. Water heater replacement will not include hazardous material abatement, major structural alteration, concrete work, painting, or floor covering.

~~1.2.A new natural gas water heater can only replace an existing natural gas water heater that has failed a natural gas appliance test, and cannot be repaired in a manner that enables it to pass an appliance test.~~

[1] *A water heater will be considered to fail the NGAT if it has a leaky tank.*

NONFEASIBILITY CRITERIA FOR CEILING INSULATION (continued)

9. **The structure is unsound and will not support the weight of the insulation and installer, such as:**
   - **2" x 4" @ ~~48"~~*greater than 24"* OC.**
   - **Bowed and sagging joists.**
   - **Fiberboard ceiling material.**
   - **1/4" gypsum ceiling.**

10. **Knob-and-Tube (K&T) Wiring is present and:**
    - **<u>Functioning</u> knob-and-tube wiring cannot be certified safe by a C-10 contractor.**
    - **<u>Abandoned</u> K&T wiring is present that cannot be disconnected and certified as abandoned and disconnected by a C-10 contractor.**
    - **Insulation over K&T wiring (live or abandoned) is prohibited by local code.**

11. **Customer refuses.**

~~NONFEASIBILITY CRITERIA RELATING TO CATASHROPHIC DUCT LEAKS AND DISCONNECTIONS~~

~~**1.The reconnection work would disturb asbestos or other hazardous material.**~~

~~**2.A combustion-related hazard exists with furnace or other fuel-burning appliance (e.g., excessive CO, cracked heat exchanger, backdrafting, etc.).**~~

~~**3.A health or safety hazard is present, such as sewage waste in the crawlspace, insect infestation, hazardous electrical wiring, or a structural hazard, etc.**~~

~~**4.Customer refuses.**~~

© RHA • 1/1/04 *(Rev. 9/15/05)* *(Rev. 10/6/05)*

NONFEASIBILITY CRITERIA FOR EVAPORATIVE COOLER COVERS

1. ~~Existing evaporative cooler vent covers are present and functional~~*An existing evaporative cooler cover is functional and performing properly, even if not installed in accordance with current Installation Standards*.

2. The evaporative cooler is ducted with multiple supply vents/registers and it is impossible for all of them to be equipped with covers.

3. Water damage to the ceiling or wall area around the vent/register is evident and cannot be repaired.

4. Vent/register opening is so close to the wall or ceiling that proper installation of the cover is impossible.

5. The vent(s) serving the evaporative cooler is (are)shared with a heating system.

6. External cover is already present.

7. Customer refuses installation of evaporative cooler vent covers.

NONFEASIBILITY CRITERIA FOR WALL AND WINDOW AIR CONDITIONER UNIT COVERS

1. ~~Existing air conditioner vent covers are present and functional~~ *An existing air conditioner vent cover is functional and performing properly, even if not installed in accordance with current Installation Standards*.

2. Water damage to the window or wall area around the unit/vent is evident and cannot be repaired.

3. The vent/unit is so close to the wall that proper installation of the cover is impossible.

4. Customer refuses installation of air conditioner vent covers.

NONFEASIBILITY CRITERIA FOR THREAD-BASED COMPACT FLUORESCENT LAMPS

1. **Socket/fixture is nonfunctional.**

2. ***Fixture already has a functional CFL.***

~~2.~~3. **Hazardous conditions exist at the socket/fixture.**

~~3.~~4. **Circuit is controlled by a solid-state timer.**

~~4.~~5. **Circuit is controlled by a dimmer not compatible with available CFL's.**

~~5.~~6. **Fixture is located in a storage room, closet, or multifamily common area.**

~~6.~~7. **Fixture is not operable by the customer (i.e., on their electric meter/bill).**

~~7.~~8. **Customer refuses.**

NONFEASIBILITY CRITERIA FOR ~~INSTALLATION~~ *REPAIR/ REPLACEMENT* REQUIRING ATTIC OR CRAWL SPACE ACCESS

1. ***Crawl clearance is inadequate:***
   - ***Attic clearance is less than 24" between top of ceiling joists and bottom of ridge board.***
   - ***Under-floor clearance is less than 18" from the ground to bottom of floor joist system.***

2. **Any of the following conditions is present in the crawl space area where access is required:**
   - **Hazardous insect or pest infestation.**
   - **Excessive ground moisture (standing water or mud).**
   - **Sewage waste is on the ground or other unsanitary condition is present which poses a health and safety hazard.**

NONFEASIBILITY CRITERIA FOR PROGRAMMABLE THERMOSTATS

1. The furnace is not being replaced or repaired.

2. The furnace is being repaired, and a properly functioning thermostat is present.

~~*10.*~~*3.* **Already ~~properly installed~~** ***present*** **and operational.**

~~**11.Furnace utilizes a millivolt system.**~~

~~**12.Upgraded thermostat wiring (heavier gage or more conductors) is required.**~~

4. Customer refuses.

NONFEASIBILITY CRITERIA FOR HVAC AIR FILTER REPLACEMENT

1. The furnace will not be repaired.

2. A serviceable~~, reusable~~ filter is already present.

NONFEASIBILITY CRITERIA FOR NATURAL GAS WATER HEATER REPLACEMENT

~~1.Existing unit is less than 10 years old and operates properly.~~

1. *The property is renter-occupied.*

2. *Fuel used by the existing unit is not supplied by the utility providing LIEE Program services.*

3. *The existing water heater:*
   - ~~Is properly functioning and Passes NGAT, or~~
   - *Is inaccessible*[1]*, or*
   - *Can be feasibly repaired (i.e., cost to repair is less than 50% of the cost to replace the unit).*

~~2.~~*4.* **Drain line for T&P valve or drain pan cannot be properly terminated to outdoors or to an approved indoor drain if required by local code***, and a gas shutoff valve and pressure relief valve cannot be installed in lieu of a T&P valve and drain line***.**

~~3.~~*5.* ~~**For a unit in a confined location:**~~ **Required access, clearance, or combustion air cannot be provided.**

~~4.~~*6.* **For a unit on a raised floor or in an attic: structure cannot properly and safely support the installation.**

~~5.~~*7.* **No suitable mounting locations for seismic bracing available.**

~~6.~~*8.* **A safety hazard is present which cannot be repaired (e.g., vent system defect, nonconforming gas piping~~, double-downdraft diverter~~).**

~~7.~~*9.* **A watertight pan cannot be installed under the unit when required.**

10. A plumbing condition exists which prevents achieving satisfactory water pipe connections.

~~8.~~*11.* **A whole house fan is present, the existing water heater is in the attic, and a closed combustion unit cannot be installed.**

~~9.~~*12.* **The unit is a central water heater serving more than one dwelling unit.**

13. **Customer refuses.**

---

[1] *See Definitions*

© RHA • 1/1/04 *(Rev. 9/15/05)* *(Rev. 10/6/05)*

NONFEASIBILITY CRITERIA FOR NATURAL GAS WATER HEATER REPAIR

1. ***The property is renter-occupied and major repairs are required beyond the scope of Service/Adjustment[1] by utility gas service personnel or their designated representative.***

2. ***Fuel used by the existing unit is not supplied by the utility providing LIEE Program services.***

3. ***The existing water heater will be replaced.***
   - ***Cost to repair is more than 50% of the cost to replace the unit.***
   - ***The tank leaks.***

4. ***A safety hazard is present which cannot be repaired.***

5. ***Required access is not available or proper combustion air cannot be provided.***

6. ***The tank is a central water heater serving more than one dwelling unit.***

7. ***Customer refuses.***

---

[1] **See Definitions**

© RHA • 1/1/04 *(Rev. 9/15/05)* *(Rev. 10/6/05)*

~~CATASTROPHIC DUCT LEAKS AND DISCONNECTIONS~~

32. ~~GENERAL INSTALLATION CRITERIA~~*DUCT REPAIR AND SEALING*

- ~~All catastrophic~~ **Duct leaks shall be sealed, ~~and all~~ disconnections *shall be* reconnected*, and needed duct repairs shall be made in accordance with WIS Section 20, Duct Sealing Standards*.**

~~-All duct reconnections and repairs shall comply with these standards and the manufacturer's instructions and local codes, with the more stringent requirements taking precedence.~~

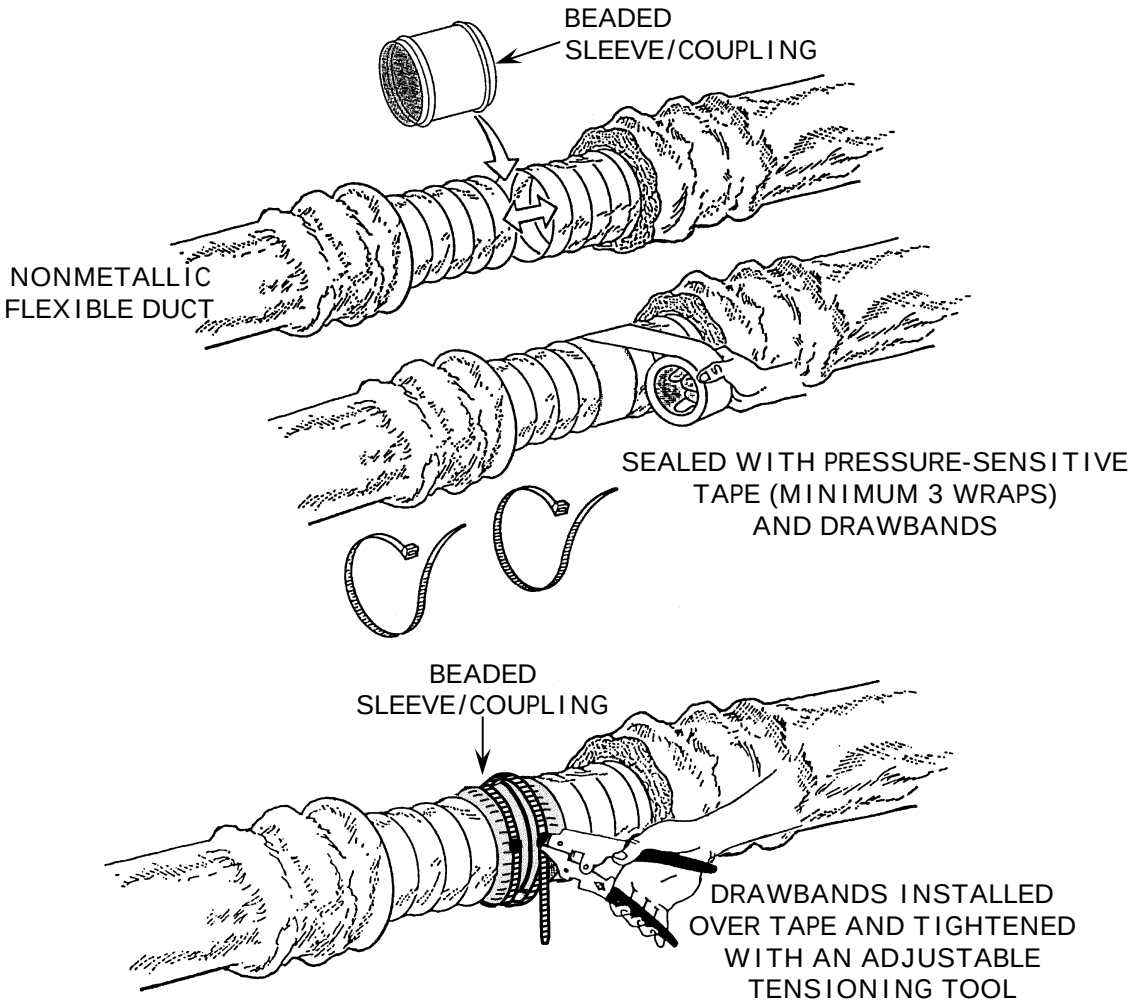

FLEXIBLE DUCT CORE SEALED TO FITTING WITH “181B-FX” TAPE

~~33.MATERIALS FOR DUCT REPAIR AND SEALING~~

~~-All Materials~~

- ~~Maximum flame spread index of 25 and maximum smoke developed index of 50, per ASTM E-84, UL 723 or NFPA 255.~~

~~-Duct Mastic and Mesh Tape~~

- ~~Nontoxic, water-resistant mastic listed per UL 181A or 181B standards and labeled "181A-M" or "181B-M".~~
- ~~Fiberglass mesh tape, minimum 2" wide and 9x9 weave per inch.~~

~~-Metallic Pressure-Sensitive Tape~~

- ~~Aluminum foil tape listed per UL 181A or 181B standards and marked "181A-P" or "181B-FX".~~

~~-Pressure-Sensitive "Butyl Tape"~~

- ~~Aluminum foil tape with minimum 15 mil butyl adhesive, used to seal metal-to-metal connections.~~
- ~~Marked "UL 723" or "181B-FX".~~
- ~~Butyl tape without "181B-FX" marking shall not be used to seal flexible ducts.~~

~~-Cloth-Backed Duct Tapes~~

- ~~Not allowed.~~

~~TABLE 3-2: REQUIRED UL 181 IDENTIFICATION~~

~~UL STANDARD~~	~~SEALING MATERIAL~~	~~REQUIRED UL IDENTIFICATION~~
~~UL 181A APPLIES TO SEALANTS USED ON RIGID FIBERGLASS DUCT BOARD~~	~~PRESSURE SENSITIVE TAPE~~	~~MARKED "181A-P"~~
	~~HEAT ACTIVATED TAPE~~	~~MARKED "181A-H"~~
	~~MASTIC~~	~~LABELED "181A-M"~~
~~UL 181B APPLIES TO SEALANTS USED ON FLEXIBLE DUCTS~~	~~PRESSURE SENSITIVE TAPE~~	~~MARKED "181B-FX"~~
	~~MASTIC~~	~~LABELED "181B-M"~~

~~33. MATERIALS FOR DUCT REPAIR AND SEALING (continued)~~

~~-Insulation~~

- ~~Replacement ducts exceeding 40 linear feet in unconditioned space shall be insulated with an R-value meeting the following guidelines:~~
  ~~-Minimum R-4.2 in CEC Climate Zones 6-8.~~
  ~~-Minimum R-6 in CEC Climate Zones 1-5 and 8-13.~~
  ~~-Minimum R-8 in CEC Climate Zones 14-16.~~

~~-Caulks and Sealants~~

- ~~Caulk/sealant material and installation criteria prescribed in Section 1, Caulking Standards, shall be followed.~~

~~-Foam Board and Foam Sealant~~

- ~~Not allowed as a barrier material or sealant in duct systems.~~

~~-Duct Sealants for Flexible Ducts~~

- ~~Tapes: "181B-FX" shall appear on the tape.~~
- ~~Mastics: "181B-M" shall appear on the label.~~

~~-Drawbands for Flexible Nonmetallic Ducts~~

- ~~Drawbands shall comply with duct manufacturer's installation instructions and the following specifications:~~
  ~~-Weather- and UV-resistant duct straps/ties rated for outdoor use.~~
  ~~-Loop tensile strength of 150 pounds minimum.~~
  ~~-Service temperature rating of 165°F minimum.~~
- ~~Drawbands shall be tightened with an adjustable tensioning tool in accordance with duct manufacturer's instructions.~~

~~-Sheet Metal~~

- ~~Galvanized sheet steel, or sheet aluminum, at least 0.007" thick.~~

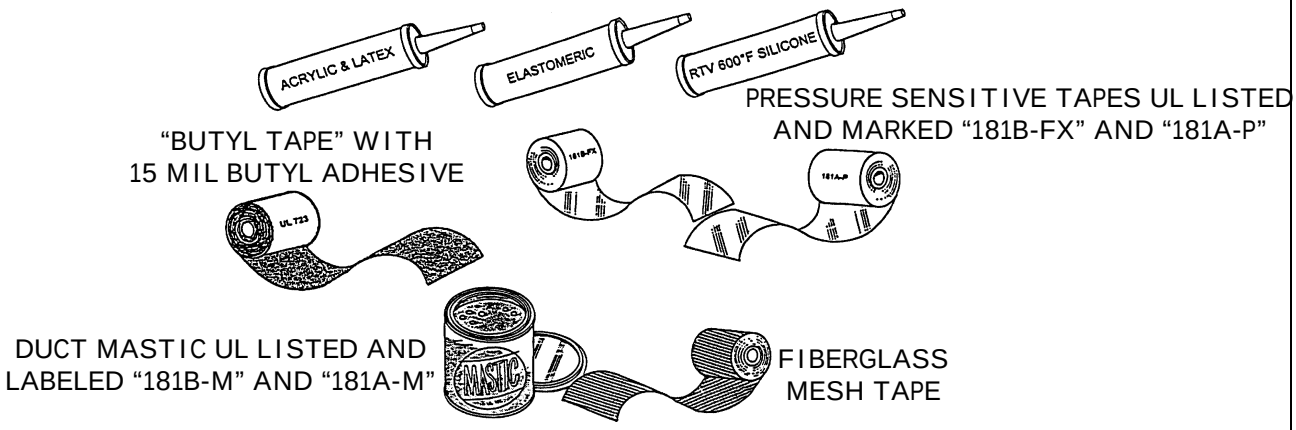

~~33. MATERIALS FOR DUCT REPAIR AND SEALING (continued)~~

~~-New Fittings (Collars, Sleeves, etc.)~~

- ~~All installed fittings shall be minimum 26 gage.~~
- ~~New fittings installed for Flexible Nonmetallic ducts:~~
  - ~~-All fittings shall be beaded.~~
  - ~~-Starting collars: minimum 4" length.~~
  - ~~-Sleeve/couplings: minimum 6" length.~~

~~-Flexible Ducts~~

- ~~Ducts shall conform to NFPA 90B and UL 181 Class 1.~~
- ~~Nonmetallic insulated ducts with air-permeable core not allowed.~~
- ~~Vapor barrier (Jacket):~~
  - ~~-Thickness: 2.5 mils minimum.~~
  - ~~-Permeance: 1.0 perm maximum.~~
  - ~~-Degradation Protection: UV degradation-resistant material (e.g., silver metalized polyester jacket). recommended.~~

~~-Insulation shall have minimum thermal resistance as indicated below, or greater if required by local code.~~

- ~~Natural Gas Heat~~
  - ~~-R-4.2 in CEC climate zones (CZ) 6 – 8.~~
  - ~~-R-6 in CZ 1 – 5 and 9 – 13.~~
  - ~~-R-8 in CZ 14 – 16.~~
- ~~Electric Heat~~
  - ~~-R-8 in all CZ.~~

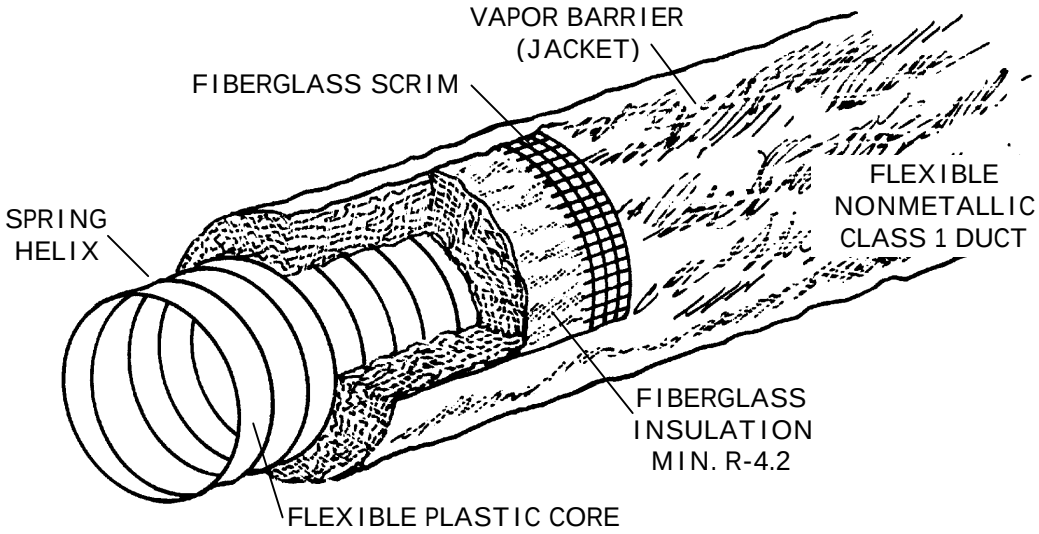

~~34.DUCT CLOSURE SYSTEMS~~

~~-All Closure Systems~~

- ~~Sealants shall be applied per manufacturer's instructions.~~
- ~~A complete, durable seal shall be achieved.~~
- ~~Pressure sensitive tapes shall be marked, and mastic containers shall be labeled, in conformance with:~~
  ~~-UL 181B for flexible metallic and nonmetallic ducts.~~
  ~~-UL 181A or 181B for rigid metal ducts and components.~~
  - ~~Exception: Butyl tape without UL 181 markings may be used to seal rigid metal-to-metal connections, per Item 4.~~

~~-Gap Size and Sealing Materials~~

- ~~Sealing materials shall be selected in conformance with Table 3-3.~~
- ~~Flexible duct connections with gaps wider than 1/4" shall be replaced with properly-sized duct and/or fitting.~~
- ~~For rigid metal ducts, gaps 1" or wider shall be repaired with a sheet metal patch (Item 37) or sleeve.~~
- ~~For rigid fiberglass ducts, repairs shall be:~~
  ~~-Made with duct board or sheet metal and screws, and~~
  ~~-Sealed with mastic or metallic tape.~~

~~TABLE 3-3: GAP SIZE AND APPROVED SEALING MATERIALS~~

~~GAP SIZE~~	~~FLEXIBLE METALLIC & NONMETALLIC DUCTS~~		~~RIGID METAL & FIBERGLASS DUCTS~~	
	~~Sealing with MASTIC~~	~~Sealing with TAPE~~	~~Sealing with MASTIC~~	~~Sealing with TAPE~~
~~£ 1/4"~~	~~Mastic~~	~~Tape~~	~~Mastic~~	~~Tape~~
~~> 1/4" - £ 1"~~	~~Repair Required*~~	~~Repair Required*~~	~~Mastic & Mesh~~	~~Mastic over Tape~~
~~1" or more~~	~~Repair Required*~~	~~Repair Required*~~	~~Metal Patch or Sleeve & Mastic~~	~~Metal Patch or Sleeve & Tape~~

~~*Duct and/or fitting must be replaced with proper size.~~

~~34. DUCT CLOSURE SYSTEMS (continued)~~

~~-Externally-Applied Closure Systems~~

- ~~Sealing materials shall:~~

  ~~-Be centered over the joint or gap, and~~

  ~~-Extend at least 1" onto each of the two joined/sealed surfaces.~~

~~-Internally-Placed Mastic Sealant (Core-to-Fitting Joints)~~

- ~~Mastic may be applied either:~~

  ~~-Inside the duct core, or~~

  ~~-Onto the rigid component over which the core is attached.~~

- ~~Mastic coating shall be at least 1/8" thick and 2" wide.~~

~~-Sealing with Mastic and with Pressure Sensitive Tape~~

- ~~Mastic and Fiberglass Mesh Tape~~

  ~~-Mastic and mesh shall be installed as prescribed in Item 38.~~

- ~~Pressure Sensitive Tapes~~

  ~~-Tape shall be installed as prescribed in Item 39.~~

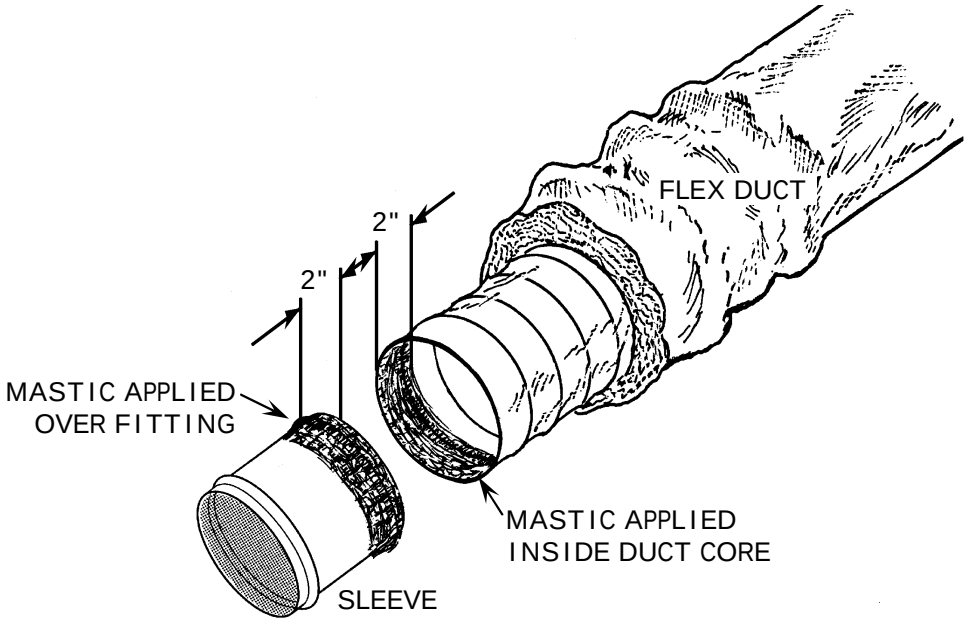

~~35.REPAIRING AND SEALING FLEXIBLE NONMETALLIC DUCTS~~

~~-Attachment of Duct Core to Fitting~~

- ~~At least 2" of duct core shall be pulled onto the fitting, with at least 1" extending past the bead.~~
- ~~Fitting must provide additional 1" wide area beyond duct core for application of tape or externally-applied mastic.~~
- ~~A drawband (duct tie or metal clamp) shall be:~~

  ~~-Placed behind the bead to secure the core onto the fitting.~~
- ~~When a preexisting fitting is not beaded:~~

  ~~-Duct core shall be secured to the fitting with internally-placed mastic and a drawband, or~~

  ~~-The core's wire coil shall be secured to the fitting with evenly-spaced #8 sheet metal screws plus mastic or tape.~~
  - ~~Each screw shall penetrate a 2" x 2" or larger strip of metallic "181B-FX" tape externally applied to the duct core.~~
  - ~~3 screws for fittings under 12", 5 screws for 12" or larger.~~

~~-Sealing Methods~~

- ~~Mastic and Fiberglass Mesh Tape~~

  ~~-Mastic and mesh shall be installed as prescribed in Item 38.~~
- ~~Pressure Sensitive Tapes~~

  ~~-Tape shall be installed as prescribed in Item 39.~~

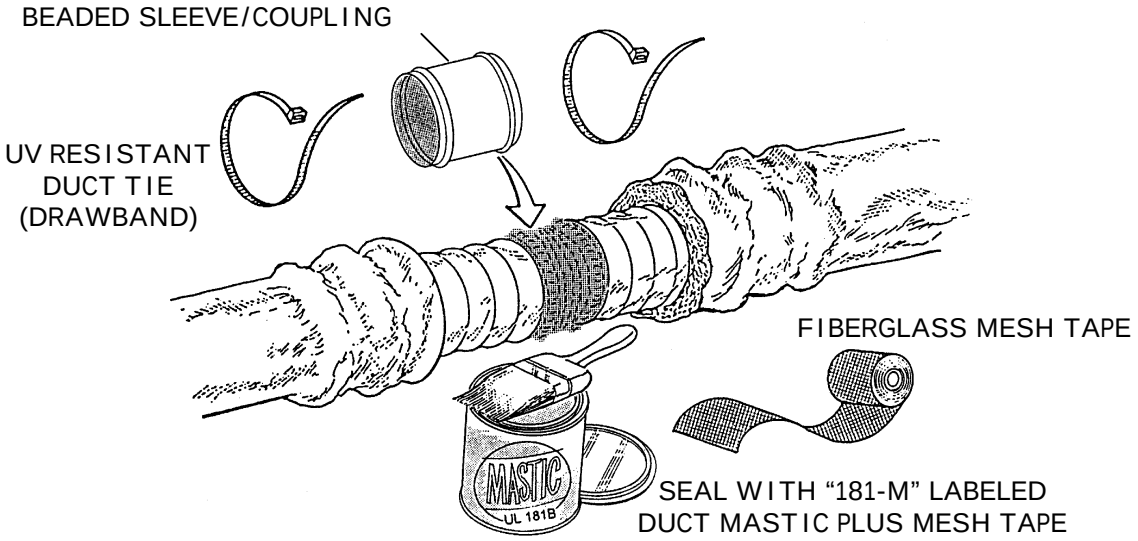

~~35. REPAIR AND SEALING FLEXIBLE NONMETALLIC DUCTS (continued)~~

~~-Insulation and Vapor Barrier~~

- ~~Insulation shall completely cover the duct core and fitting.~~
- ~~The vapor barrier (jacket) shall be pulled back over the insulation.~~

~~-Where two pieces of duct are joined (splices), the two jackets shall overlap at least 2".~~

~~-Vapor barrier shall be secured/sealed with a drawband and/or three staggered wraps of pressure sensitive tape (see Item 39).~~

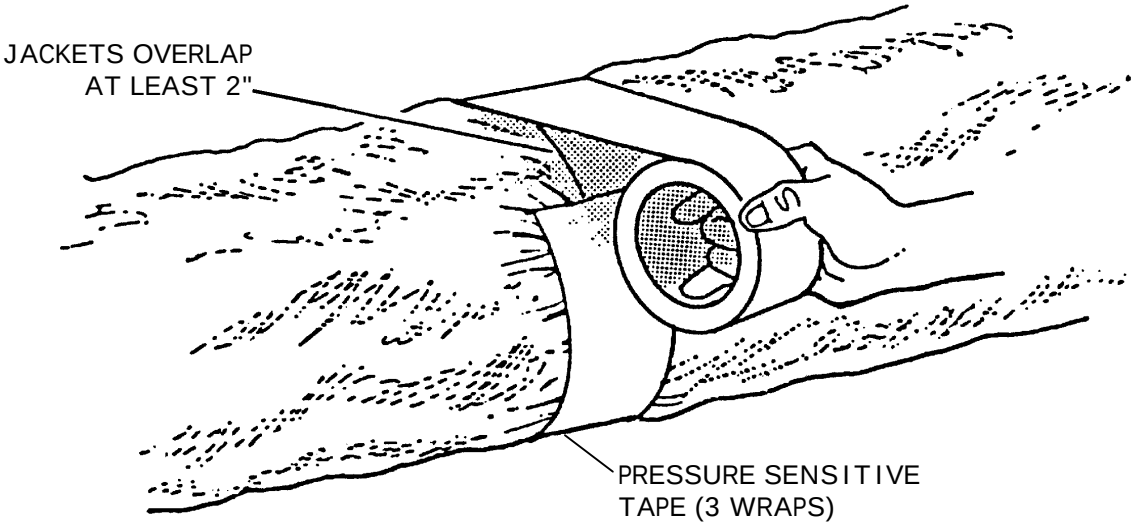

~~36.REPAIRING AND SEALING RIGID METAL DUCTS~~

~~-Attachment of Metal Sections~~

- ~~When two rigid components are joined (e.g., duct and starting collar, or two pieces of duct), they shall overlap at least 1-1/2".~~

~~-Mechanical Fasteners~~

- ~~Connections shall be secured with #8 or larger sheet metal screws equally spaced, or an equivalent fastening method.~~
- ~~Round Ducts~~

  ~~-At least 3 screws for duct diameters up to 14", 4 screws for diameters 15" to 19", and 5 screws for diameters 20" to 24".~~
- ~~Rectangular Ducts~~

  ~~-At least 1 screw per side.~~
- ~~Lapped Seams (e.g., field fabricated metal plenums, etc.)~~

  ~~-Overlapped surfaces shall:~~
  - ~~Be in substantial contact with each other along the entire seam.~~
  - ~~Be securely fastened together (e.g., with 1/2" #8 or larger sheet metal screws at intervals of 12" or less).~~

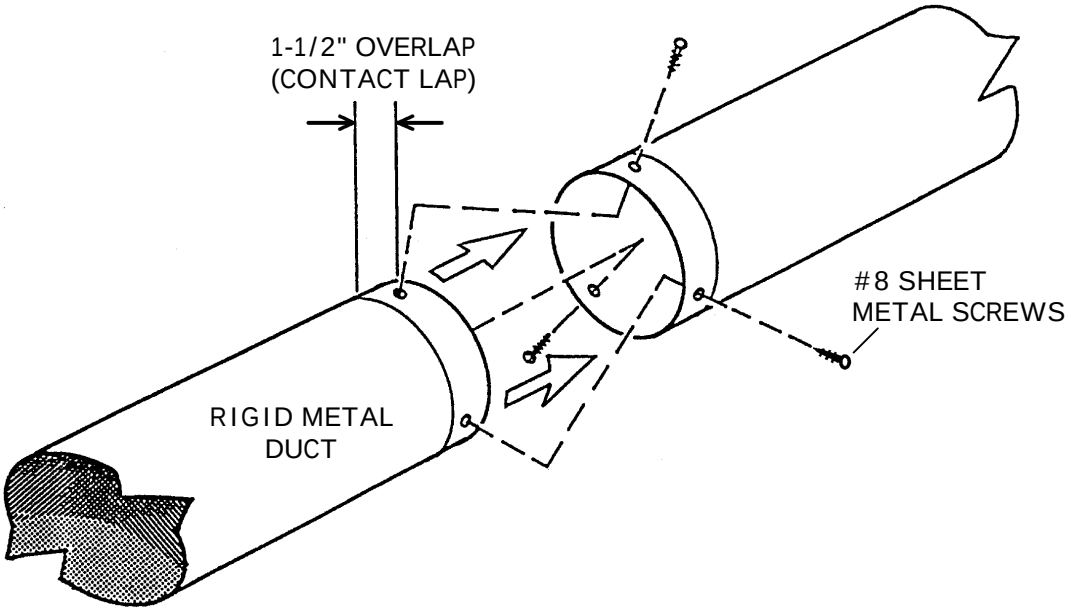

© RHA • 1/1/04 *(Rev. 9/15/05)* *(Rev. 10/6/05)*

~~36. REPAIRING AND SEALING RIGID METAL DUCTS (continued)~~

~~-Gaps 1/4" or smaller may be sealed with:~~

- ~~Duct mastic, or~~
- ~~Metallic pressure sensitive tape.~~

~~-Gaps over 1/4" up to 1" wide shall be sealed with:~~

- ~~Duct mastic with embedded fiberglass mesh, or~~
- ~~Metallic pressure sensitive tape covered with mastic.~~

~~-Gaps over 1" wide shall be repaired with a sleeve or a sheet metal patch (per Item 37) and sealed with mastic or metallic tape.~~

~~-All Connections~~

- ~~Mastic and fiberglass mesh shall be installed per Item 38.~~
- ~~Metallic pressure sensitive tapes shall be installed per Item 39.~~

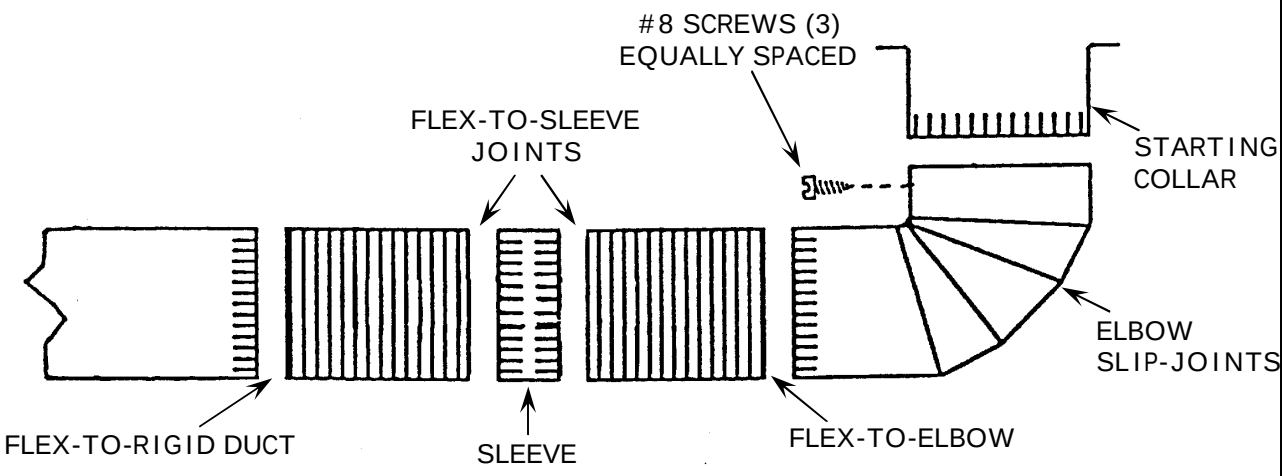

- TAPE OR MASTIC ON GAPS UP TO 1/4"
- MASTIC & MESH, OR METALLIC TAPE COVERED BY MASTIC, ON GAPS OVER 1/4"

~~37.SHEET METAL PATCHES FOR RIGID METAL DUCTS~~

~~**-Material**~~

- ~~Patch material shall match the existing duct material (i.e., galvanized patch for galvanized duct, or aluminum patch for aluminum duct).~~
- ~~Gauge of the patch shall equal or exceed gauge of the existing duct.~~

~~**-Installation**~~

- ~~Patch material shall:~~

  ~~-Extend at least 1" beyond each edge of the gap, and~~

  ~~-Overlap itself by at least 1".~~
- ~~The patch shall be wrapped tightly around the duct and secured with #8 sheet metal screws.~~

  ~~-Where the patch overlaps itself, at least 1 screw shall be installed on each side of the gap.~~

  ~~-At least 2 more screws shall be evenly-spaced around the duct on each side of the gap.~~

~~**-Sealing**~~

- ~~All patch edges/gaps shall be sealed per Item 34.~~

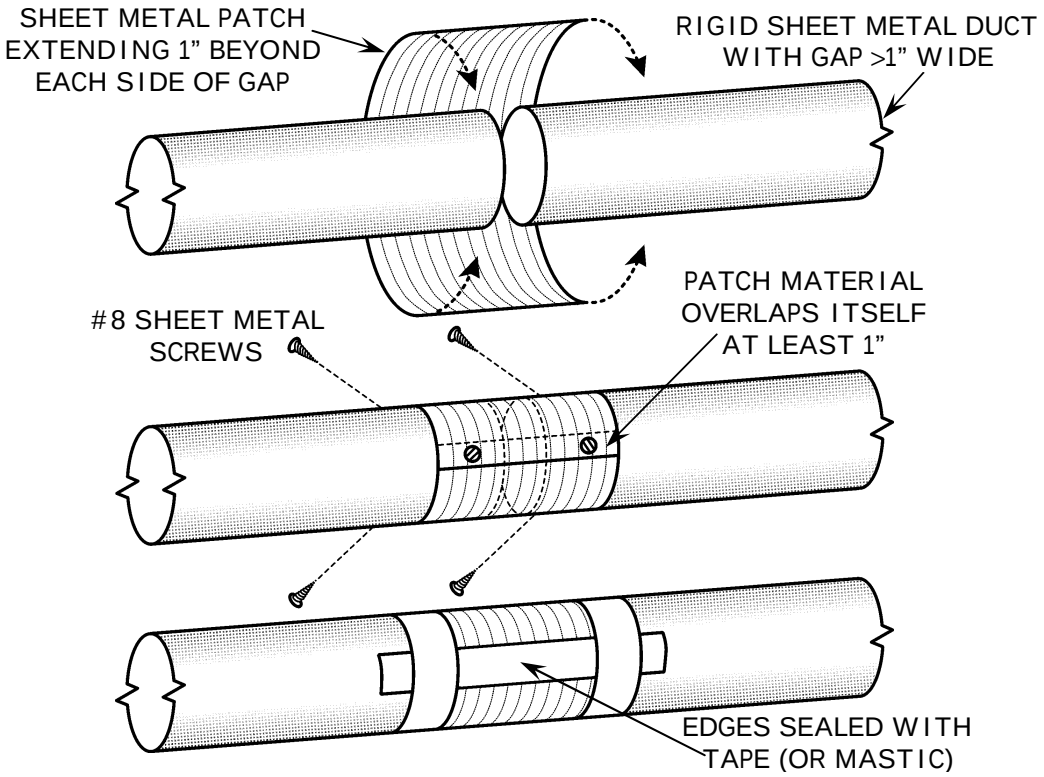

~~38. DUCT MASTIC SEALING PROCEDURE~~

~~**-Rigid Metal Ducts and Components**~~

- ~~Mastic by itself may be used to seal gaps up to 1/8" (e.g., on adjustable elbow joints, seams in wyes, metal duct seams, etc.).~~
- ~~Mastic shall be reinforced with fiberglass mesh tape when used to seal gaps larger than 1/8".~~
- ~~When sealing longitudinal seams in new rigid metal ducts, mastic is required on S-and-drive, snap lock, and government lock seams.~~

~~**-Flexible Metallic and Nonmetallic Ducts**~~

- ~~Mastic used to seal core-to-fitting connections may be:~~

  ~~-Externally applied over the duct core and rigid fitting, or~~

  ~~-Internally placed between the core and the fitting.~~
- ~~Externally-Applied Mastic~~

  ~~-Mastic shall be reinforced with fiberglass mesh tape when:~~
  - ~~A gap greater than 1/8" exists between the duct core and the fitting (starting collar, coupling, elbow, wye, etc.).~~
  - ~~Mastic is used to seal the outer vapor barrier (jacket).~~

© RHA • 1/1/04 *(Rev. 9/15/05)* *(Rev. 10/6/05)*

~~39. SEALING WITH MASTIC~~

~~-Mastic shall be applied as prescribed by manufacturer, including:~~

- ~~Surface preparation/cleaning.~~
- ~~Temperature and moisture limitations.~~
- ~~Thickness and set-up time.~~

~~-Rigid Metal and fiberglass ducts and Components~~

- ~~Mastic by itself may be used to seal gaps up to 1/4".~~
- ~~Mastic shall be reinforced with fiberglass mesh tape when used to seal gaps larger than 1/4".~~
- ~~Gaps larger than 1" wide shall be repaired and sealed:~~

  ~~-Metal ducts per Item 37.~~

  ~~-Fiberglass ducts repaired with fiberglass duct board or sheet metal and screws, and sealed with mastic or metallic tape.~~

~~-Flexible Metallic and Nonmetallic Ducts~~

- ~~Mastic used to seal core-to-fitting connections may be:~~

  ~~-Externally applied over the duct core and rigid fitting, or~~

  ~~-Internally placed between the core and the fitting.~~
- ~~Externally-Applied Mastic~~

  ~~-Mastic shall be reinforced with fiberglass mesh tape when:~~
  - ~~A gap greater than 1/4" up to 1/2" exists between the duct core and the fitting (starting collar, coupling, elbow, wye, etc.).~~
  - ~~Mastic is used to seal the jacket (vapor barrier).~~

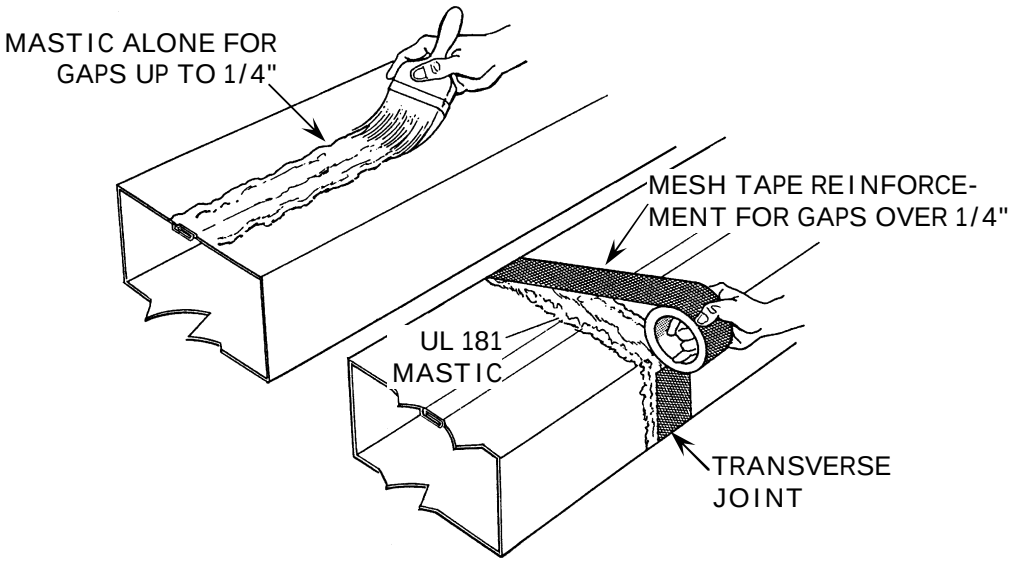

~~38. DUCT MASTIC SEALING PROCEDURE (continued)~~

~~-Reinforcement of Mastic with Fiberglass Mesh Tape~~

- ~~Mesh fabric shall be imbedded between two layers of duct mastic to form a mastic closure system.~~

~~-The first layer of mastic shall:~~

- ~~Be centered over the joint or gap to be sealed.~~
- ~~Extend at least 1" onto each of the joined surfaces.~~
- ~~Extend beyond the width of the mesh.~~

~~-The mesh fabric shall be:~~

- ~~Embedded in the mastic.~~
- ~~Applied at least one layer thick over the entire joint or gap.~~
- ~~Wrapped around the entire circumference on transverse joints (e.g., where two sections of duct are joined together).~~

~~-A second layer of mastic shall be installed over the mesh, filling the scrim pattern completely and covering the mesh.~~

- ~~Mesh Tape~~

~~-Minimum 2" wide.~~

~~-Weave per inch: 0.006" minimum.~~

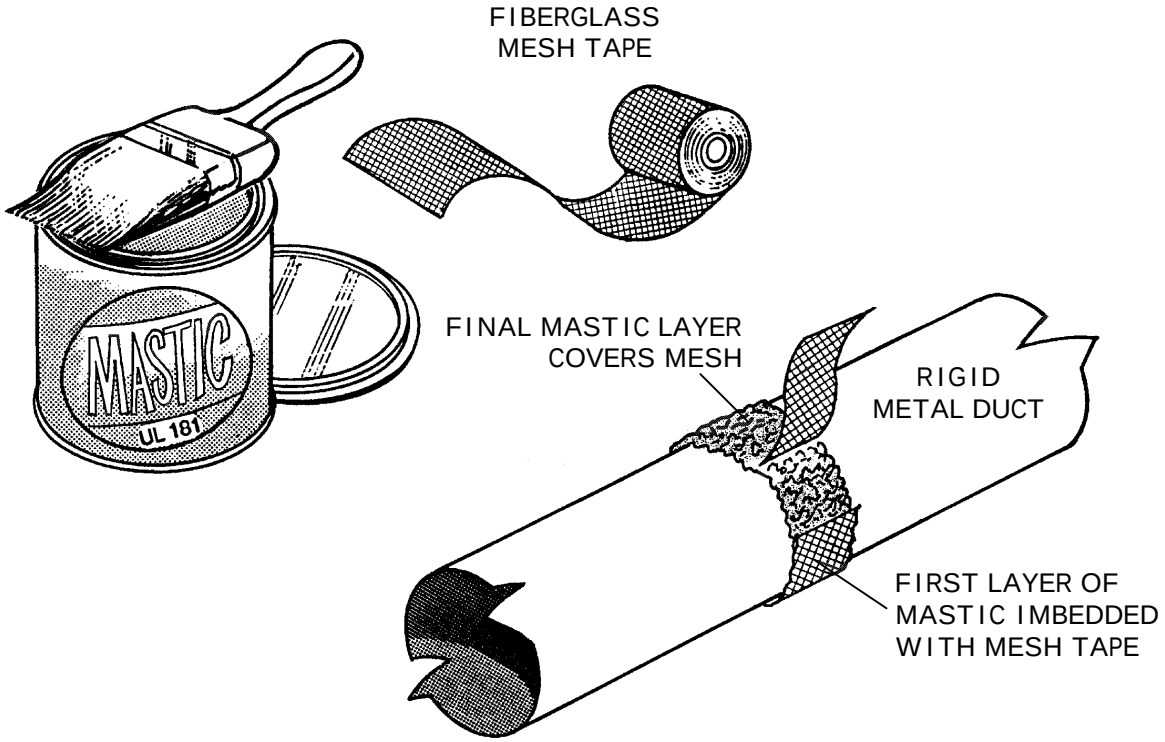

~~**40.SEALING WITH TAPE**~~

~~**-Pressure Sensitive Tapes**~~

- ~~Tapes shall be installed as prescribed by manufacturer.~~
- ~~Successive wraps of tape shall be staggered and should overlap by 50 to 75% of the tape width.~~
- ~~At least three wraps of tape shall be applied when sealing:~~

  ~~-Transverse joints in round or rectangular metal ducts (the joint formed when two pieces of duct are spliced together).~~

  ~~-Flexible duct core-to-fitting attachments (with a drawband also installed to secure the core).~~

  ~~-Vapor barrier (jacket) splices on flexible ducts.~~
- ~~When gaps between 1/4" and 1" are sealed with tape:~~

  ~~-Tape shall be applied as prescribed above and then covered with duct mastic.~~

  ~~-The mastic shall be applied at least 1/8" thick over the installed tape to provide additional strength and durability.~~

  ~~-Mastic shall extend beyond the width of the tape.~~
- ~~Metallic pressure sensitive tape shall be used to seal rigid metal connections.~~

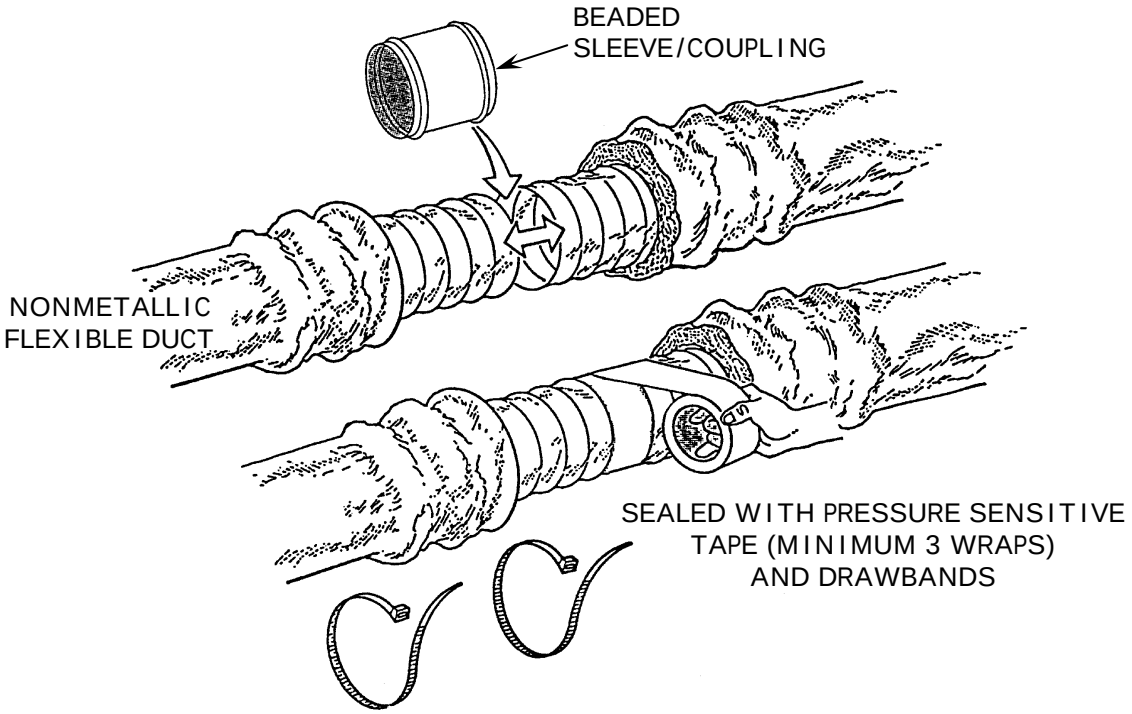

7. DUCT SEALING PROTOCOL

- ***Standards***
  - *Duct repairs and sealing shall be performed in accordance with WIS Section 20, Duct Sealing Standards.*
- **Start Criteria**
  - Duct repair and sealing work may begin only if the *Initial* Total Duct Leakage satisfies the Start Criteria in the Program P&P.
- **Stop Criteria**
  - When the LIEE Duct Sealing maximum leakage criteria must be met, one of the following LIEE P&P requirements shall be satisfied:
    - Target Leakage (stop) criteria, or
    - ~~Economic~~ *Default (*stop*)* criteria~~—~~*all accessible leaks sealed*.
  - When Title 24 criteria maximum leakage must be met:
    - Target Leakage must be met as shown in Table 10-2.
    - Measurement method (C) shall be used only when Target Leakage cannot be met using method (A) or (B).
- **Required data shall be recorded on the data form, including:**
  - Total Duct Leakage (or Leakage to Outside) CFM_{25} from the *Initial* test, performed before starting duct repair and sealing work.
  - Total Duct Leakage (or Leakage to Outside) CFM_{25} from the *Final* test performed after completing duct repair and sealing work.

TABLE 10-2: TITLE 24 DUCT SEALING TARGET LEAKAGE

MEASUREMENT METHOD	TARGET LEAKAGE	T-24 PROCEDURE[1]
(A) Total Duct Leakage	**<15% of System Fan Flow**	**RC.4.3.1**
(B) Duct Leakage Reduction	**>60% Leakage Reduction[2]**	**RC.4.3.4, RC.4.3.6, and RC.4.3.7**
(C) Prescriptive Default	**Target Not Met but All Accessible Ducts are Sealed[3]**	**RC.4.3.5, RC.4.3.6, and RC.4.3.7**

[1]Title 24 ACM Residential Manual Appendix RC-2005

[2]Final duct leakage compared to Initial duct leakage, with a smoke test to confirm that all accessible leaks have been sealed.

[3]When leakage target cannot be met, all accessible leaks must be sealed, as confirmed by a smoke test.

SECTION 15

HARD-WIRED COMPACT FLUORESCENT FIXTURE STANDARDS

1. MATERIALS

- **Fixture must be UL listed and meet ANSI/UL Standard 935 Class-P.**
- **CFLs must be ~~ENERGY STAR® compliant~~ *ENERGY STAR® qualified*.**
- **Compact fluorescent lamp (CFL) tube glass and other housing materials must be UV resistant and heat stable.**
- **Hardwired fixtures and lamps must be fully warranted for one year from date of purchase.**
- **Fixture must allow for lamp replacement *and utilize Title 24-compliant high efficacy (e.g., pin-based) lamps meeting the following standards:***
  - ***40 Lumens/watt — lamps 15 watts or less***
  - ***50 Lumens/watt — lamps over15 watts to 40 watts***
  - ***60 Lumens/watt — lamps over 40 watts***

2. INSTALLATION

- **All fixtures shall be installed:**
  - **In accordance with the current NEC and local codes.**
  - **In a manner which prevents water from entering or accumulating in wiring compartment, lamp holder or electrical parts.**
- **All wiring, conduit, accessories, fasteners, and controls used in exterior locations shall be designed for exterior use.**

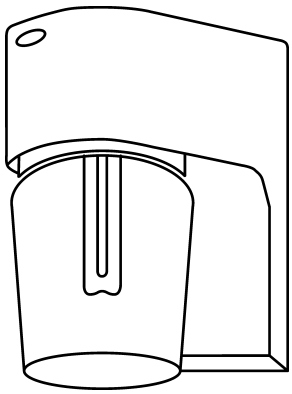

WALL-MOUNT
FLUORESCENT FIXTURE
WITH PHOTO CELL CONTROL

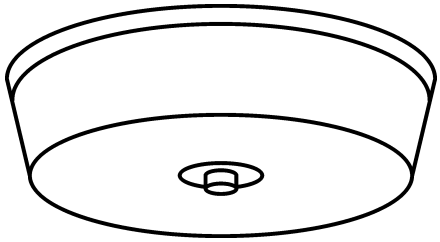

CEILING-MOUNT
COMPACT FLUORESCENT
REPLACEMENT FIXTURE

NATURAL GAS CENTRAL FORCED AIR HEATING SYSTEMS REPAIR AND REPLACEMENT STANDARDS

PART 1: MATERIALS

1. APPROVED MATERIALS

- **All materials shall be in conformance with the CBC and CMC.**
- **Furnaces**
  - All units and components shall be UL listed and AGA certified.
  - All units shall be ENERGY STAR[â] ~~labeled~~*qualified*.
- **Split Systems**
  - Furnace: Minimum AFUE rating of ~~90~~~~80~~*78*%.
  - Air Conditioner, *if replaced in conjunction with furnace*:
    - Minimum EER of 11.~~0~~ *5* and SEER of 13.0, with a Thermostatic Expansion Valve (TXV).
    - EER shall be determined by the coil match as listed in the current ARI Directory.
- **Package Units (Dual Packs):**
  - Furnace: Minimum AFUE rating of ~~80~~*78*%.
  - Air Conditioner: Minimum EER of ~~10~~*11*.5 and SEER of ~~12~~*13*.0.

LISTED

9. THERMOSTATS

- **Location and Mounting**
  - New thermostat shall be installed at existing location unless affected by drafts, heat from direct sun, or adjacent appliances.
  - Thermostat installed in a new location:
    - Shall be mounted with the top of thermostat 60" above the floor when occupants are not handicapped.
    - May be installed as low as 48" above the floor when an occupant uses a wheelchair.
    - *May be installed on the appliance housing at least 48" above the floor when:*
      - *Allowed by the manufacturer, and*
      - *Wall mounting requires wiring that is not feasible (e.g., attic not accessible).*
  - Thermostat shall be located on an interior wall away from direct sunlight, doors, windows, return/supply air, appliances, and sources of electrical interference.
  - Mounting bracket shall be securely attached to wall with screws for wood, or appropriate anchors for drywall and plaster.
  - Any holes or damage to wall from installation or removal of thermostat shall be repaired in a workmanlike manner.

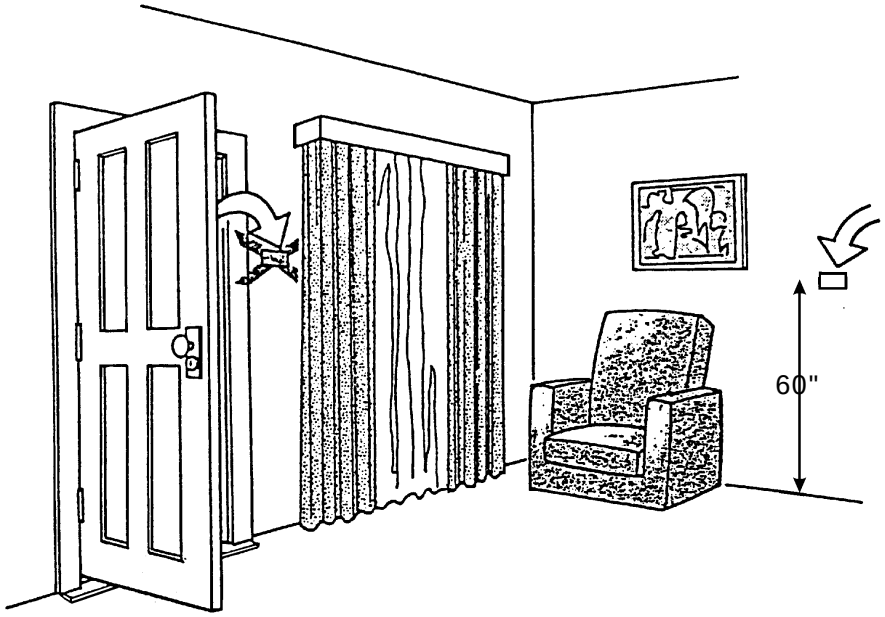

DUCT REPAIR AND SEALING

19. DUCT CLOSURE SYSTEMS

- **All Closure Systems**
  - Sealants shall be applied per manufacturer's instructions.
  - A complete, durable seal shall be achieved.
  - Pressure sensitive tapes shall be marked, and mastic containers shall be labeled, in conformance with:
    - UL 181B for flexible metallic and nonmetallic ducts.
    - UL 181A or 181B for rigid metal ducts and components.
      - Exception: Butyl tape without UL 181 markings may be used to seal rigid metal-to-metal connections, per Item 4.
- **Gap Size and Sealing Materials**
  - Sealing materials shall be selected in conformance with Table 20-3.
  - Flexible duct connections with gaps wider than 1/4" shall be replaced with properly-sized duct and/or fitting.
  - For rigid metal ducts, gaps 1" or wider shall be repaired with a sheet metal patch (Item 28) or sleeve.
  - *For rigid fiberglass ducts, repairs shall be:*
    - *Made with duct board or sheet metal and screws, and*
    - *Sealed with mastic or metallic tape.*

TABLE 20-3: GAP SIZE AND APPROVED SEALING MATERIALS

GAP SIZE	FLEXIBLE METALLIC & NONMETALLIC DUCTS		RIGID METAL & FIBERGLASS DUCT	
	Sealing with MASTIC	Sealing with TAPE	Sealing with MASTIC	Sealing with TAPE
£ 1/4"	Mastic	Tape	Mastic	Tape
> 1/4" - < 1"	Repair Required*	Repair Required*	Mastic & Mesh	Mastic over Tape
1" or more	Repair Required*	Repair Required*	Metal Patch or Sleeve & Mastic	Metal Patch or Sleeve & Tape

***Duct and/or fitting must be replaced with proper size.**

19. DUCT CLOSURE SYSTEMS (continued)

- **Externally-Applied Closure Systems**
  - Sealing materials shall:
    - Be centered over the joint or gap, and
    - Extend at least 1" onto each of the two joined/sealed surfaces.
- **Internally-Placed Mastic Sealant (Core-to-Fitting Joints)**
  - Mastic may be applied either:
    - Inside the duct core, <u>or</u>
    - Onto the rigid component over which the core is attached.
  - Mastic coating shall be at least 1/8" thick and 2" wide.
- ***Sealing with Mastic and with Pressure Sensitive Tape***
  - *Mastic and Fiberglass Mesh Tape*
    - *Mastic and mesh shall be installed as prescribed in Item 20.*
  - *Pressure Sensitive Tapes*
    - *Tape shall be installed as prescribed in Item 21.*

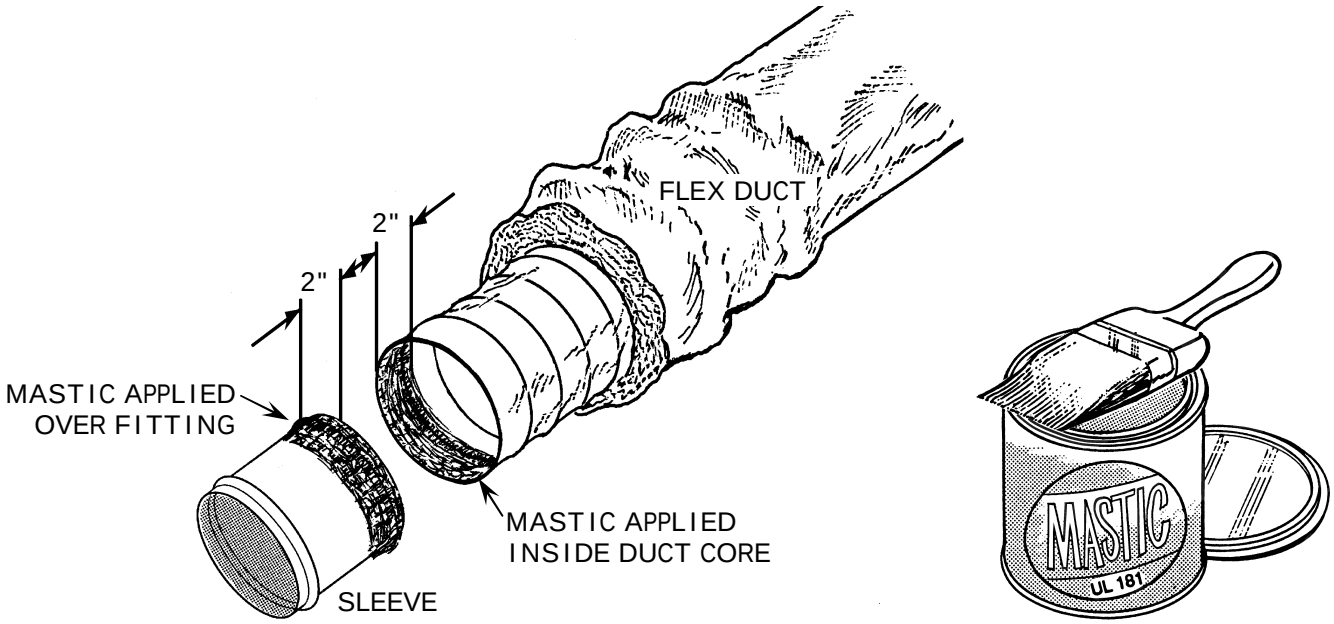

21. SEALING WITH PRESSURE SENSITIVE TAPE
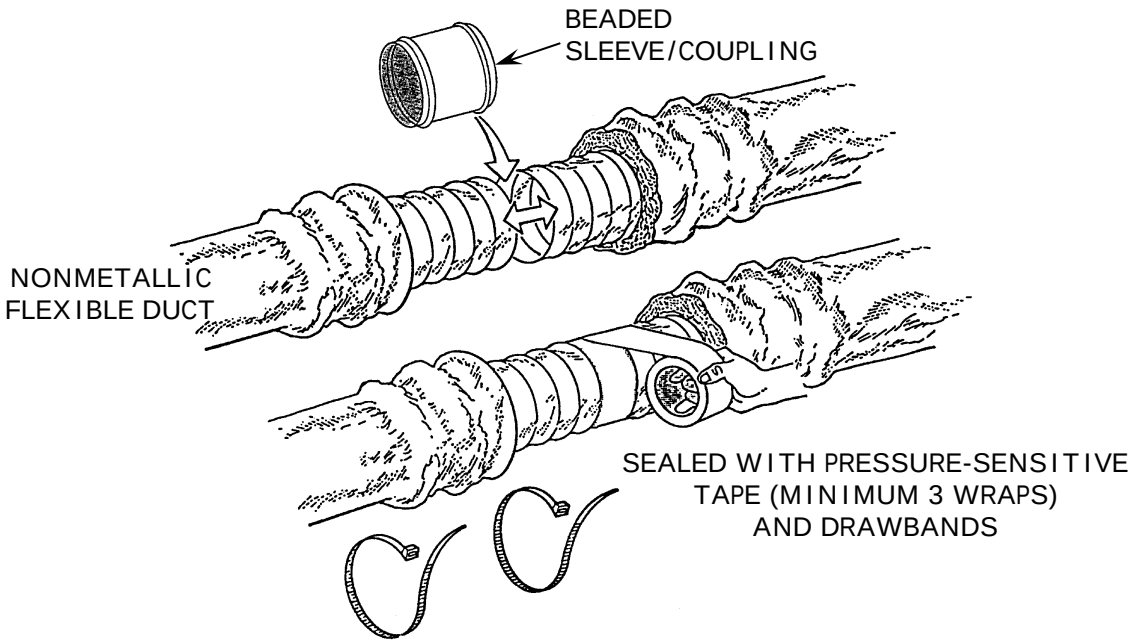
- **All Pressure Sensitive Tapes**
  - Tapes shall be installed as prescribed by manufacturer, including:
    - Surface preparation/cleaning.
    - Application of pressure/rubbing.
    - Temperature and moisture limitations.
  - Successive wraps of tape shall be staggered and should overlap by 50 to 75% of the tape width.
  - At least 3 wraps of tape shall be applied when sealing:
    - Transverse joints at splices and connections in round or rectangular metal ducts.
    - Flexible duct core-to-fitting attachments (with a drawband also installed to secure the core).
    - Jacket (vapor barrier) splices on flexible ducts.
  - When gaps over 1/4" up to <1" wide are sealed with tape:
    - Tape shall be applied as prescribed above and then covered with duct mastic.
    - The mastic shall be applied at least 1/8" thick over the installed tape to provide additional strength and durability.
    - Mastic shall extend beyond the width of the tape.
  - *Gaps 1" or wider shall be repaired and sealed per Item 19.*