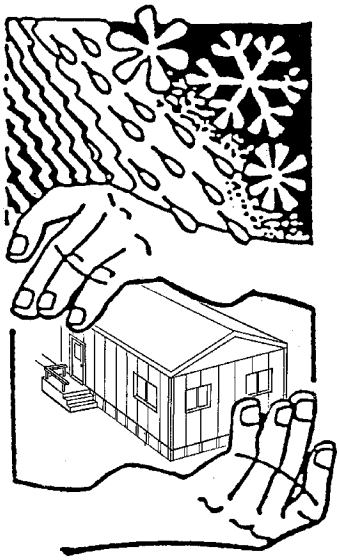

CALIFORNIA MOBILE HOME WEATHERIZATION INSTALLATION STANDARDS

for use in

California's Low Income Energy Efficiency Programs

administered by

San Diego Gas and Electric Company
Southern California Edison
Southern California Gas Company
Pacific Gas and Electric Company

PART 2

SEPTEMBER 15, 2005 –*REVISIONS*– *(WITH EDITS)*

NATURAL GAS CENTRAL FORCED AIR HEATING SYSTEMS REPAIR AND REPLACEMENT STANDARDS

PART 1: APPROVED MATERIALS

1. ALL MATERIALS

- **Materials installed within a manufactured home shall be in compliance with HCD regulations and HUD MHCSS (Code of Federal Regulations, Chapter XX, Part 3280).**
- **Materials installed outside a manufactured home shall be in compliance with HCD regulations or, as applicable, requirements of the local building department.**

2. HVAC EQUIPMENT

- **Furnaces**
  - All units and components shall be UL listed and AGA certified.
- **Split Systems**
  - Furnaces shall be approved for manufactured home installation.
  - Furnace shall have an AFUE rating of at least *78%.*~~90% when available, 80% minimum.~~
  - Air Conditioner*, if replaced in conjunction with furnace*:
    - Minimum EER of 11.~~0~~*5* and SEER of 13.0, with a Thermostatic Expansion Valve (TXV).
    - EER shall be determined by the coil match as listed in the current ARI Directory.
- **Package Units (Dual Packs):**
  - Furnace: Minimum AFUE rating of ~~80~~*78*%.
  - Air Conditioner: Minimum EER of ~~10~~*11*.5 and SEER of ~~12~~*13*.0.

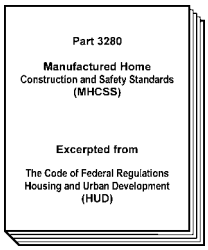

LISTED

LISTED FURNACES AND FLUE SYSTEMS MUST COMPLY WITH HUD MHCSS

3. INSTALLATION COMPONENTS

- **Metal Flue and Vent Pipes**
  - All installed materials shall comply with HUD MHCSS Section 3280.703 and, as applicable, local building department regulations.
  - Flue systems shall be UL listed and in compliance with furnace listing and manufacturer's specifications and instructions.
- **Gas Pipes and Valves**
  - Gas values shall be listed and AGA certified.
  - Gas flexible connectors shall be listed epoxy-coated or stainless steel units.
  - Pilot tubing shall be aluminum (copper not allowed).
  - Fuel-gas piping:
    - Shall be in conformance with manufacturer's instructions, HUD MHCSS Section 3280.705 and, as applicable, requirements of the local building department.
    - Copper gas lines not allowed.
- ***Ducts and Sealants***
  - *Materials shall be in conformance with Section 17, Duct sealing Standards.*

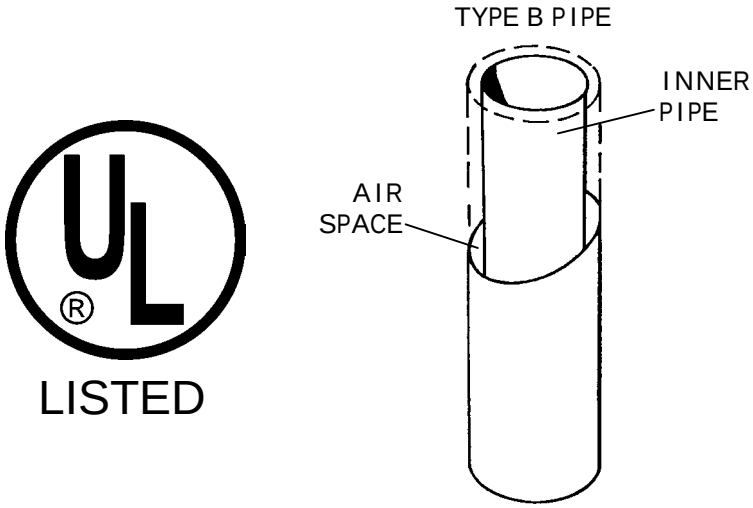

METAL PIPES AND ASSEMBLIES
UL LISTED AND MFR. COMPLIANT

3. INSTALLATION COMPONENTS (continued)

- **Programmable Wall Thermostat**
  - *ENERGY STAR® qualified.*
  - *System powered, not battery powered, on 24 volt systems.*
  - Digital with anti-short-cycle feature.
  - Minimum setback capability of 10°F.
  - At least two setback periods per 24 hour day, with change cycle increments being no greater than 30 minutes.
  - Manual override and standard alkaline battery backup or other program saving backup system.
  - Positive on/off switch that is easily accessible.
  - Compatible with the HVAC equipment.
- **Standard Wall Thermostat**
  - Alternative when customer refuses programmable thermostat.
  - Digital with built in anti-short-cycle feature.
  - Conforms with manufacturer's instructions.
  - Compatible with the HVAC equipment.
  - Includes a positive on/off switch.

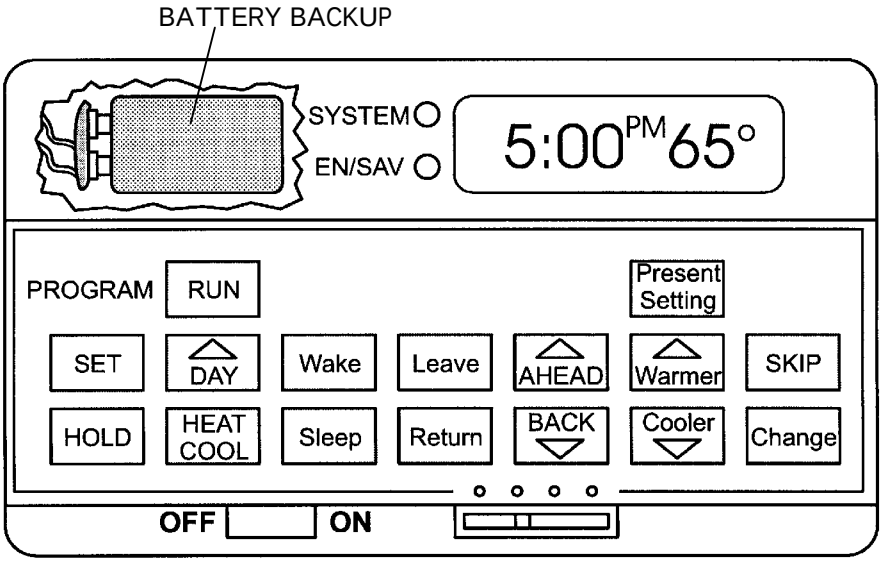

DIGITAL PROGRAMMABLE THERMOSTAT
WITH ON/OFF SWITCH

3. INSTALLATION COMPONENTS (continued)

- **Central Heating and Air Conditioning Air Filters**
  - Shall be washable, UL listed Class 2 filter material in conformance with ARI Standard 680 and UL-900 or UL-1096.
  - "Hog Hair" Type and Other Bonded Fiber
    - 1" thickness shall be used in central HVAC systems.
  - Foam
    - 1/4" single layer foam, 20 to 30 pores per inch (ppi).
    - Foam shall be installed only when bonded fiber is <u>not</u> feasible or is prohibited by the appliance manufacturer.
  - Other Materials
    - "Sock" type foam and other specialty materials may be installed where required by appliance manufacturer.

4. WARRANTY

- **HVAC Unit Installations**
  - Parts and labor shall be covered by a minimum one (1) year written parts and labor warranty.
  - Compressor warranty shall extend to five (5) years.
  - All written warranty information and manufacture's operating and maintenance instructions shall be supplied to the customer.
- **Wall Thermostats**
  - Minimum one-year manufacturer's warranty.
  - Minimum one-year parts and labor contractor's warranty.

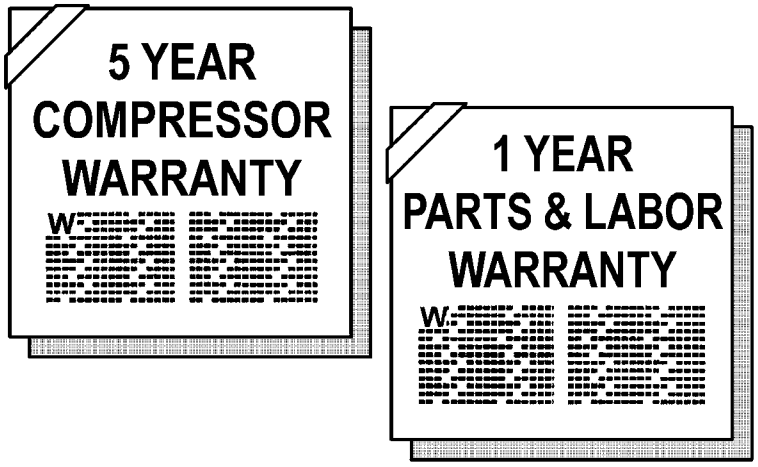

~~5. MATERIALS FOR CATASTROPHIC DUCT REPAIR~~

~~-All Materials~~

- ~~Maximum flame spread index of 25 and maximum smoke developed index of 50, per ASTM E-84, UL 723 or NFPA 255.~~

~~-Caulks and Sealants~~

- ~~Caulk/sealant material and installation criteria prescribed in Section 2, Caulking Standards, shall be followed.~~
- ~~Foam sealants are not allowed for duct repair/sealing.~~

~~-Duct Mastic and Mesh Tape~~

- ~~Nontoxic, water-resistant mastic listed per UL 181A or 181B standards and labeled "181A-M" or "181B-M".~~
- ~~Fiberglass mesh tape, minimum 2" wide and 9x9 weave per inch.~~

~~-Tapes for Sealing Flexible Nonmetallic and Flexible Metallic Ducts~~

- ~~Tapes with markings that include "181B-FX", minimum 2" wide.~~
- ~~Cloth-back *butyl*-adhesive tapes are allowed if CEC-approved for use in California (e.g., indicated by "CA" in the product number).~~

~~-Tapes for Sealing Rigid Metal Ducts and components~~

- ~~Metallic tapes marked "181A-P" and/or "181B-FX", min. 2" wide.~~
- ~~Aluminum foil tape with minimum 15 mil butyl adhesive ("butyl tape") marked "UL 723" or "181B-FX".~~

~~-Tapes Not Allowed:~~

- ~~Cloth-back *rubber*-adhesive tapes.~~

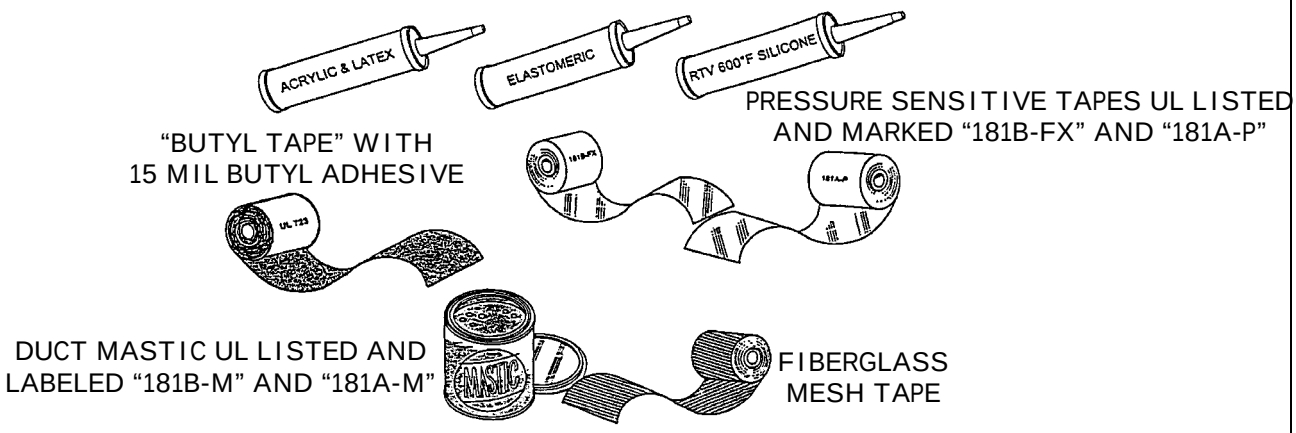

~~4. MATERIALS FOR CATASTROPHIC DUCT REPAIR (continued)~~

~~-Drawbands for Flexible Nonmetallic Ducts~~

~~· Drawbands shall comply with duct manufacturer's installation instructions and the following specifications:~~

~~-Weather- and UV-resistant duct ties.~~

~~-Loop tensile strength of 150 pounds minimum.~~

~~-Service temperature rating of 165°F minimum.~~

~~· Drawbands shall be tightened with an adjustable tensioning tool in accordance with duct manufacturer's instructions.~~

~~-Sheet Metal~~

~~· galvanized sheet steel, or sheet aluminum, at least 0.007" thick.~~

~~-New Fittings (Collars, Sleeves, etc.)~~

~~· All installed fittings shall be minimum 26 gage.~~

~~· New fittings installed for Flexible Nonmetallic ducts:~~

~~-All fittings shall be beaded.~~

~~-Starting collars: minimum 4" length.~~

~~-Sleeve/couplings: minimum 6" length.~~

~~-Foam Board and Foam Sealant~~

~~· Not allowed as a barrier material or sealant in duct systems.~~

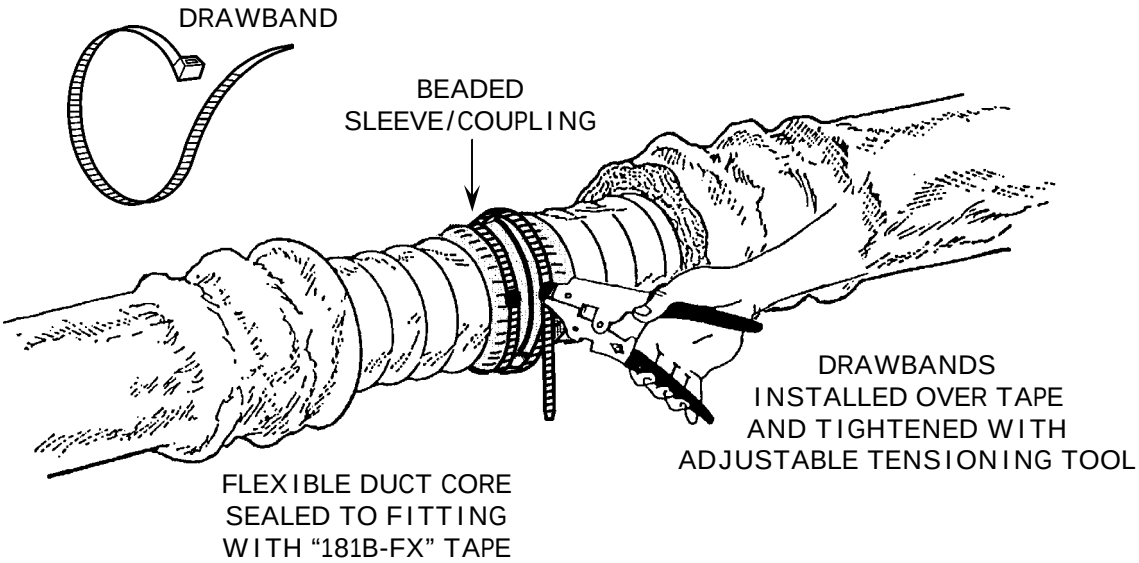

~~4. MATERIALS FOR CATASTROPHIC DUCT REPAIR (continued)~~

~~-Flexible Ducts~~

- ~~In crawl spaces not accessible to animals, flexible ducts may be used to:~~
  - ~~Replace damaged or deteriorated flexible ducts (e.g., crossover ducts).~~
  - ~~Install a new ducted return system.~~
- ~~All ducts shall conform to NFPA-90B and UL-181 Class 1.~~
- ~~Insulating material shall have a minimum thermal resistance of R-4.2, or as jurisdiction requires.~~
- ~~Nonmetallic flexible duct core shall be fabricated with a with a spring steel helix bonded within nonporous material (e.g., molded composite or two-ply lamination of polyester).~~
- ~~Metallic flexible duct core shall be fabricated from minimum 0.0065" thick aluminum material or equivalent.~~
- ~~Vapor barrier (jacket) shall:~~
  - ~~Be rated for mobile home use.~~
  - ~~Have a minimum thickness of 3.5 mils.~~
  - ~~Have a maximum permeance of 1.0 perm.~~

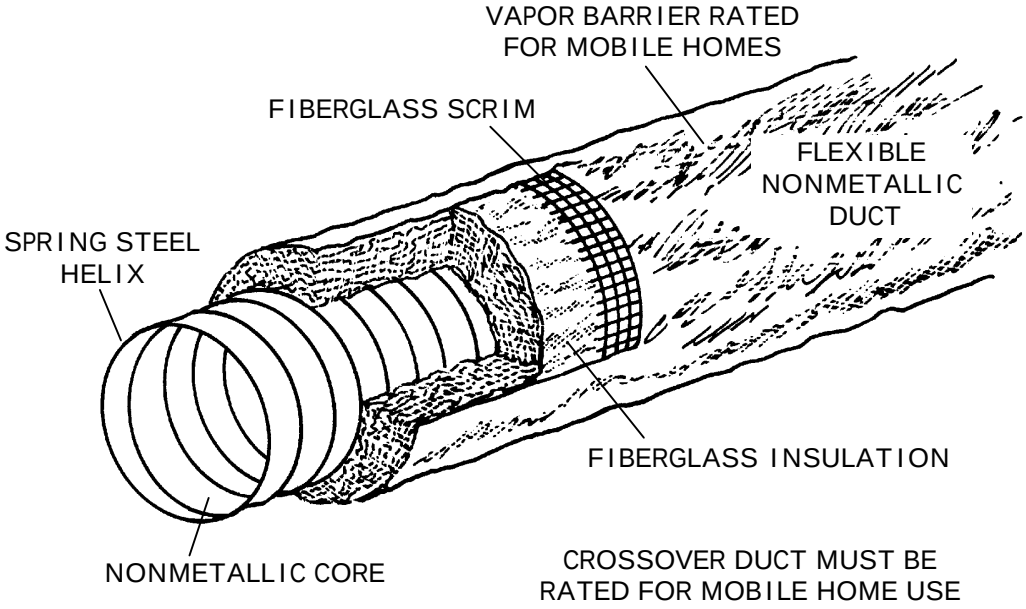

~~6. WARRANTY~~

~~-HVAC Unit Installations~~

- ~~Parts and labor shall be covered by a minimum one (1) year written parts and labor warranty.~~
- ~~Compressor warranty shall extend to five (5) years.~~
- ~~All written warranty information and manufacture's operating and maintenance instructions shall be supplied to the customer.~~

~~-Wall Thermostats~~

- ~~Minimum one-year manufacturer's warranty.~~
- ~~Minimum one-year parts and labor contractor's warranty.~~

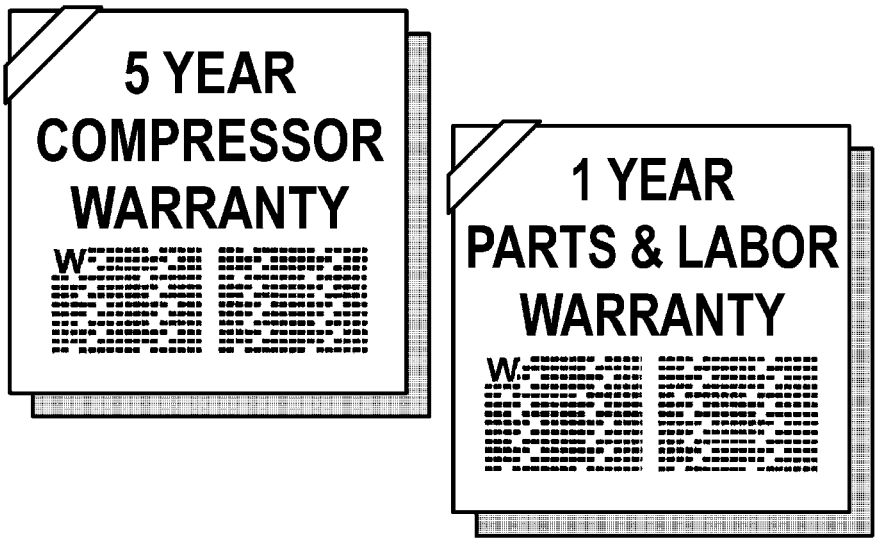

PART 2: NEW FURNACE AND COMBINED FURNACE AND AIR CONDITIONER INSTALLATION

5. GENERAL REQUIREMENTS

- **A permit shall be obtained from and finalized by:**
  - HCD for installations inside the mobile home.
  - HCD or, as applicable, the local building department for installations outside the mobile home.
- **Installation shall be in compliance with manufacturer's instructions and specifications, and, as applicable, with:**
  - HUD MHCSS, the requirements of HCH, and as applicable
  - Requirements of the local building department.
- **Lead-safe practices shall be employed when working with pre-1979 painted materials per state codes T8 Section 1532.1 and T17 Section 36000, et seq.**
- ***Air* Distribution System**
  - Distribution system shall be in conformance with HVAC manufacturer's specifications.
  - Retrofit Units Utilizing Existing Duct System
  - Duct system shall be examined for ~~catastrophic leaks (e.g., partial and complete disconnections).~~ *leaks* ~~and brought into conformance with Title 24 requirements,~~*in accordance with the program Policy and Procedures.*
  - *Testing shall be performed in accordance with WIS Section 10, Duct Testing Standards, and repairs and sealing shall be made in accordance with WIS Section 20, Duct Sealing Standards.*

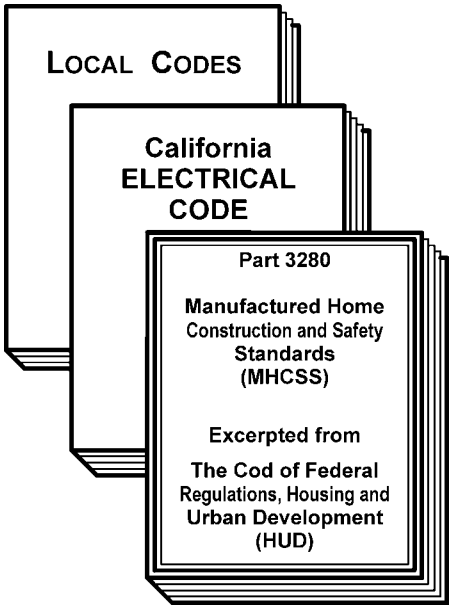

  - The supply and return plenums shall be securely attached to the air handler, with ductwork securely attached to the respective plenums.
  - New ductwork shall be installed in conformance with manufacturer's instructions.

PART 3: NEW FURNACE INSTALLATION

6. LOCATION

- **FAU Enclosure**
  - Enclosure shall be the proper size for required clearances.

7. SYSTEM DESIGN AND PERFORMANCE

- **All Installations**
  - ~~Heating capacity and system design shall be in conformance with standard practices set forth by ACCA (Air Conditioning Contractors of America), Manual J and Manual S.~~
  - *Unit shall be properly sized in accordance with Title 24, HCD requirements, or local code, whichever is ~~more~~ most stringent.*
  - ~~Furnace shall perform as designed~~ *Capacity of the new system should be equal to or smaller than the existing system*.
- **Installations Utilizing Existing Ducts**
  - New FAU shall be compatible with existing duct system.

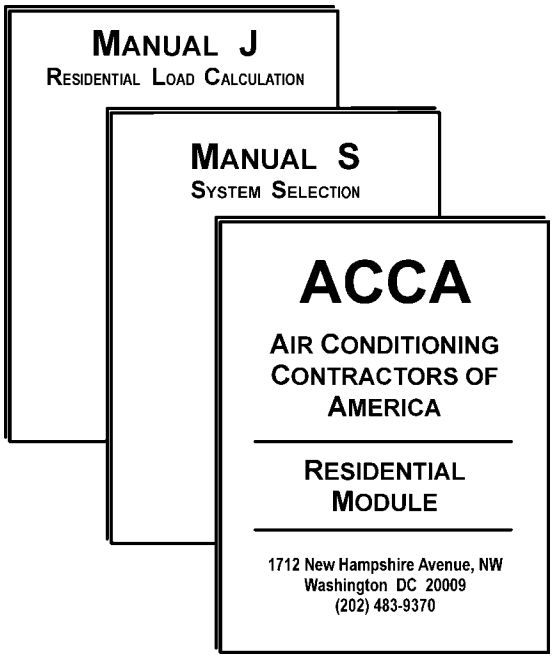

8. NEW FURNACE INSTALLATION

- **Plumbing/Piping**
  - Risers, flexible connectors, fittings and valves shall be installed in conformance with manufacturer's instructions, HUD MHCSS Section 3280.705, and as applicable, requirements of the local building department.
  - Only new parts shall be installed; used parts not allowed.
  - Shutoff valve shall be within 3' of the appliance and in the same room or space where the appliance is located.
- **Wall, Door, and Floor Repairs**
  - Repairs shall blend with surrounding surfaces.
  - Abandoned floor openings shall be closed in a workmanlike manner:
    - Flush with surrounding flooring material, or
    - Recessed to accommodate future installation of floor covering material.
  - All construction debris shall be removed from the crawl space and the premises.

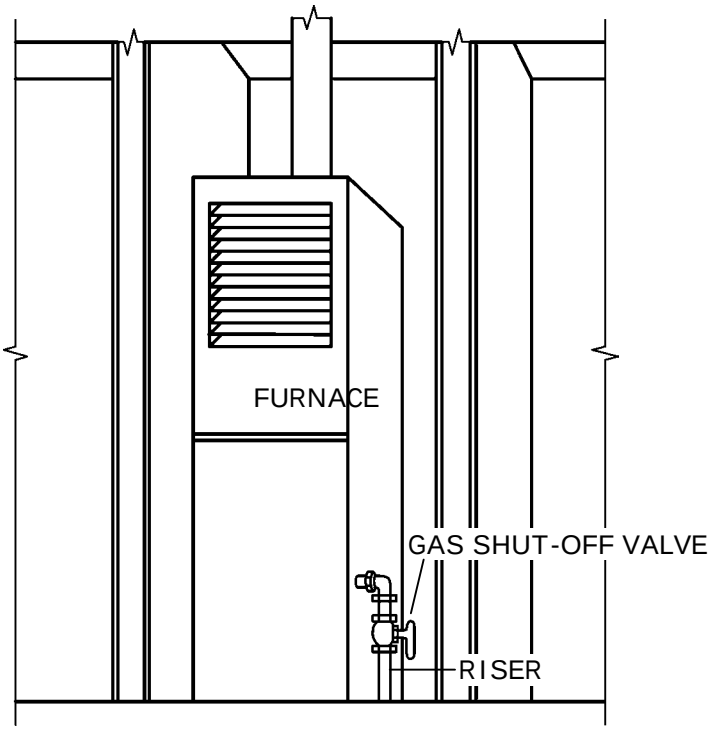

9. COMBUSTION AIR

- **All Furnaces**
  - Combustion air shall be supplied from outdoors in conformance with furnace listing, manufacturer's instructions, and HCD regulations.
- **Furnaces Drawing Combustion Air from Undercarriage Space**
  - Undampered venting shall be present in the skirting.
  - Cross-ventilation shall be present, with venting located on at least two different sides of the mobile home skirting.
  - ~~Net free venting area (NFVA) of skirting vents shall total at least two times the combustion air NFVA requirement.~~
  - Skirting vents on each side shall provide at least 1.5 sq. ft. NFVA for each 25 lineal feat of mobile home length.

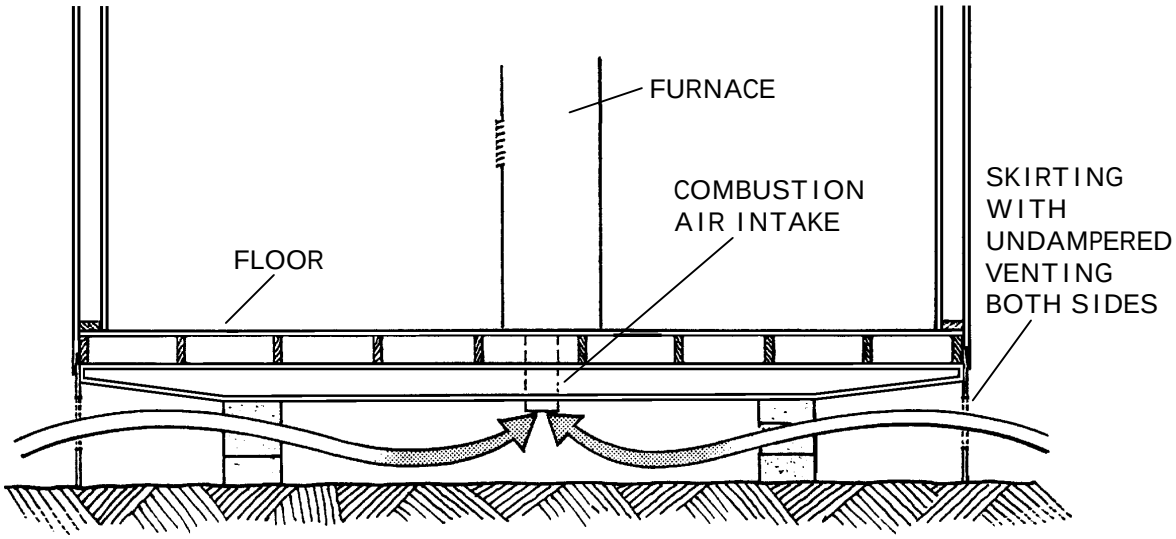

10. ISOLATION OF RETURN AIR

- **The return air system shall <u>not</u> have leaks which:**
  - Depressurize any open combustion appliance enclosure.
  - Draw in combustion air or combustion byproducts from any open combustion appliance (e.g., from the furnace itself or a nearby water heater).
  - Depressurize or draw air from a space where hazardous chemicals are stored or toxic fumes may be present.
- **The following conditions are <u>not</u> allowed:**
  - An open combustion FAU drawing non-ducted return air through a grille in the furnace cabinet.
  - A closed combustion FAU located in an appliance enclosure adjacent to an open combustion water heater when:
    - The furnace enclosure is part of the return system <u>and</u>
    - The two appliances are <u>not</u> separated by an airtight barrier.
- **Any condition which allows pollutants to be drawn into the FAU return shall be corrected.**

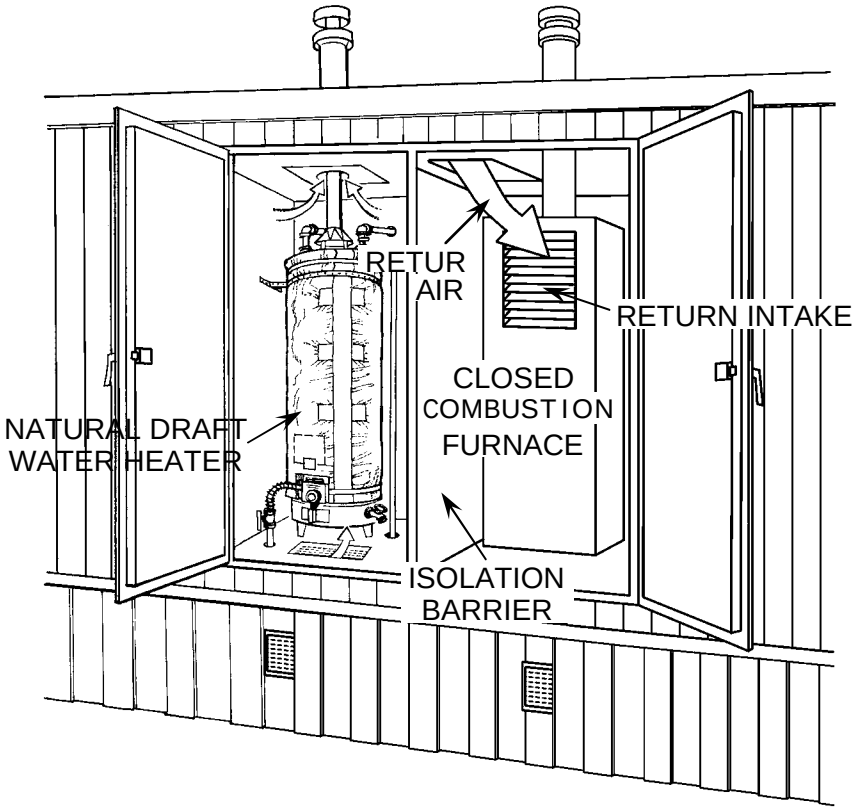

11. AIR DISTRIBUTION SYSTEM

- ***Existing Duct System***
  - *System shall be examined for leaks and disconnections ~~and brought into conformance with LIEE duct leakage requirements~~and repaired as needed in accordance with the program Policy and Procedures.*
  - *Testing shall be performed in accordance with WIS Section 11, Duct Testing Standards, and duct repairs and sealing shall be made in accordance with WIS Section 17, Duct Sealing Standards.*
- ***Return System***
  - *Belly-Cavity and Roof-Cavity Returns*
    - *In accordance with the program Policy and Procedures:*
      - *Existing belly-cavity return shall be abandoned, and a new ducted central return shall be installed.*
      - *Existing leaky roof-cavity return shall be repaired as applicable, and replaced with a new central return when repair is needed but not feasible.*
  - *New central return shall be designed and installed in conformance with~~applicable standards~~ WIS Section 17 and HCD requirements.*
- ***Cabinet and Plenum***
  - *Components shall be mechanically attached and sealed around the perimeter (cabinet-to-duct connector, cabinet-to-plenum) using materials and methods prescribed in ~~on~~ WIS Section 17.*
  - *Plumbing and wiring penetrations into the evaporator coil box and return air chamber shall be sealed with cork tape.*
- ***New Ductwork***
  - *Components shall be installed in conformance with manufacturer's instructions.*

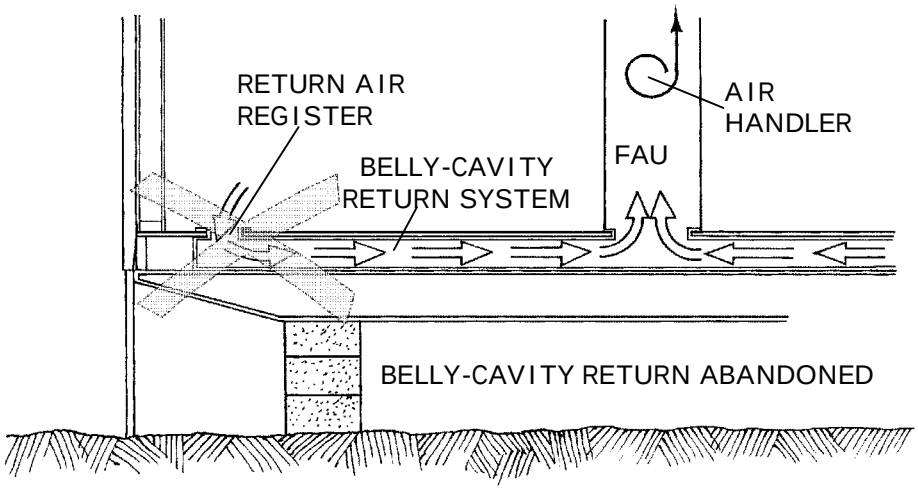

~~13. DUCTS AND PLENUMS~~

- ~~**Disconnections and catastrophic leaks shall be repaired in accordance with Part 8 (Items 51–59).**~~
- ~~**Return System**~~
  - ~~Belly-Cavity and Roof-Cavity Returns~~
    - ~~Belly cavity shall not be utilized for return air.~~
    - ~~Existing belly-cavity return shall be abandoned, and a new ducted central return shall be installed.~~
    - ~~Existing leaky roof-cavity return shall be repaired as needed, and shall be replaced with a new central return when repair is not feasible.~~
  - ~~New central return shall be designed and installed in conformance with applicable standards.~~
- ~~**Cabinet and Plenum**~~
  - ~~Components shall be mechanically attached and sealed around the perimeter (cabinet-to-duct connector, cabinet-to-plenum) using materials and methods prescribed in Item 4.~~
  - ~~Plumbing and wiring penetrations into the evaporator coil box and return air chamber shall be sealed with cork tape.~~

12. FLUE AND VENT SYSTEMS

- **Listing specifications, manufacturer's instructions, and HCD regulations shall be followed for:**
  - Installation of a new flue/vent system.
  - Connection to an existing flue/vent system.
- **Existing flue/vent system shall be replaced unless it:**
  - Is in good condition (free of leaks, deterioration, damage, etc.).
  - Meets listing requirements of the replacement furnace.
  - Is in conformance with furnace manufacturer’s instructions.

13. ELECTRICAL WIRING

- **All electrical wiring shall be installed in conformance with manufacturer's instructions, HUD MHCSS Section 3280, Subpart I, and as applicable, requirements of the local building department.**
- **Service Disconnect**
  - For installations inside the mobile home, requirements of HCD shall be met.
  - For installations outside the mobile home:
    - Requirements of HCD and as applicable, requirements of the local building department shall be met.
    - An independent means of disconnect within view of the equipment shall be provided when required (e.g., for a new split system condenser).

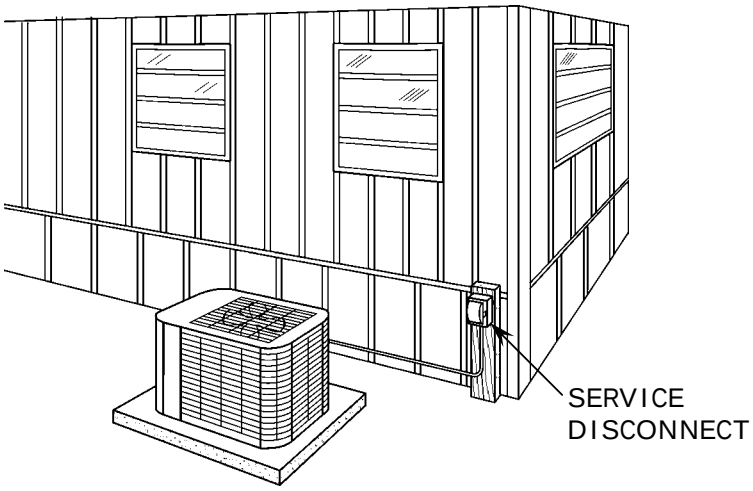

SPLIT SYSTEM REPLACEMENT CONDENSER UNIT

14. GAS LINES, FITTINGS AND VALVES

- **All Installations**
  - All gas piping (e.g., risers, flexible connectors, fittings and valves) shall be installed in conformance with manufacturer's instructions, HCD requirements, and local code.
    - Gas shut-off valve shall be in good condition and in conformance with Item 3.
    - Gas flexible connector shall be new (existing shall not be reused).
  - All new and affected lines and components shall be checked for gas leaks by a method approved by the authority having jurisdiction, such as one of the following:
    - Commercial leak detection liquid.
    - Electronic leak detector.
    - Pressure test of the line.

15. CENTRAL AIR CONDITIONERS COMBINED WITH FURNACE

- **Equipment shall be installed as prescribed in Part 5.**

16. WALL THERMOSTATS

- **When required by the Program Policy and Procedures, a programmable thermostat shall be installed as prescribed in Part 6.**

ELECTRONIC LEAK DETECTOR

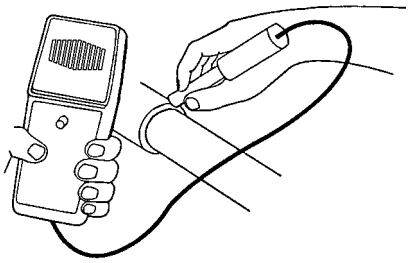

LIQUID LEAK DETECTION METHOD

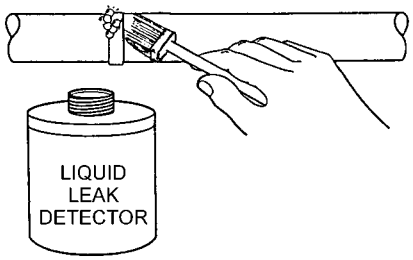

GAS LINE FITTINGS, VALVES, AND CONNECTORS CHECKED FOR GAS LEAKS

PART 4: FURNACE REPAIRS

17. PRELIMINARY EXAMINATION

- **The furnace shall be checked for the presence of defects, such as the following:**
  - Gas leaks at valves, fittings, joints, or flexible gas connectors.
  - Presence of copper gas line or butt-soldered joints.
  - Heat exchanger defects (e.g., cracks, holes, deterioration).
  - Excessive rust in the draft hood or heat exchanger.
  - Flue/vent system defects, such as:
    - Disconnections, leaks, obstructions, etc.
    - Defective/missing cap.
    - Misaligned, defective or multiple draft hoods.
    - Inadequate clearance from combustibles.
    - Improper termination.
    - Single-wall pipe used where double-wall is required (e.g., extending beyond ceiling.
  - Burner defects, such as:
    - Excessive soot or rust.
    - Dirty or improperly adjusted.
    - Flame impingement and/or abnormal flame.
    - Delayed or rollout ignition.
    - Incorrect orifice.
    - Over- or under-fired.

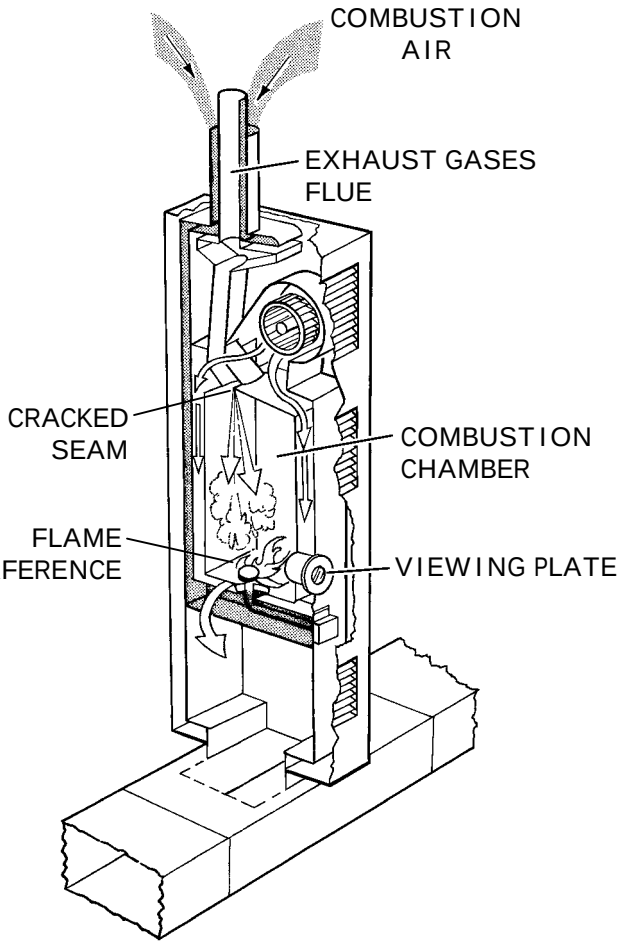

17. PRELIMINARY EXAMINATION (continued)

- **The furnace shall be checked for the presence of defects, such as the following:**
  - Improper position of thermocouple/pilot generator, pilot or flame.
  - Inadequate/improper combustion air venting.
  - Controls
    - Electrical disconnection or defect.
    - Improper adjustment.
  - Distribution System
    - Return leaks that could draw in combustion products or other pollutants.
    - Furnace-to-floor/plenum gaps/leaks.
    - Dirty, defective, or missing ~~furnace~~ *HVAC unit air* filter.
  - Blower Chamber
    - Need for cleaning or lubrication of blower.
    - Loose or unsafe wiring.
  - Evaporator Coil Box
    - Dirty or damaged evaporator coil.
    - Air leaks at plumbing or wiring penetrations.
  - Heating unit integrity:
    - Loose or hazardous wiring.
    - Loose or missing components.
    - Improper alteration of the heating unit.

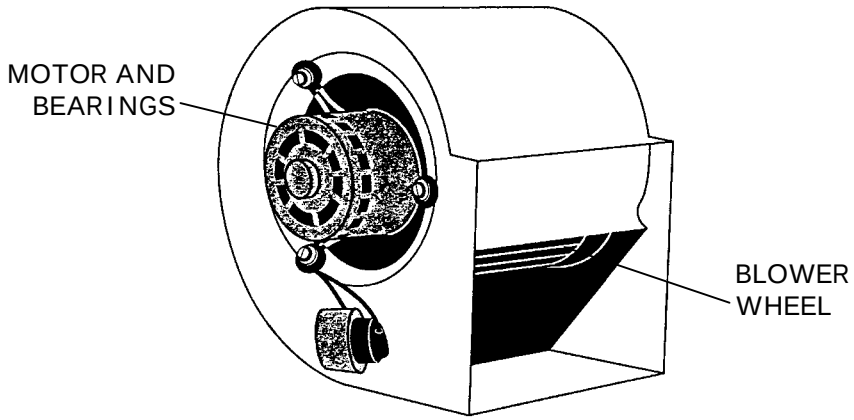

18. ~~CATASTROPHIC~~ DUCT ~~LEAKS~~*TESTING AND SEALING*

- **Duct system shall be ~~checked~~ *examined* for ~~catastrophic~~ leaks and disconnections *and* ~~brought into conformance with LIEE requirements,~~ *repaired as needed in accordance with the program Policy and Procedures*.**
- ~~**Repairs shall be made in accordance with Part 8 (Items 51–59).**~~ ***Testing shall be performed in accordance with WIS Section 11, Duct Testing Standards, and repairs and sealing shall be made in accordance with the Section 17, Duct Sealing Standards.***

19. ~~FURNACE~~ *HVAC UNIT AIR* FILTERS

- **All filters shall be properly installed and clean.**
- **Unframed filters shall be properly supported to prevent being drawn toward the air handler, as prescribed in Part 7.**

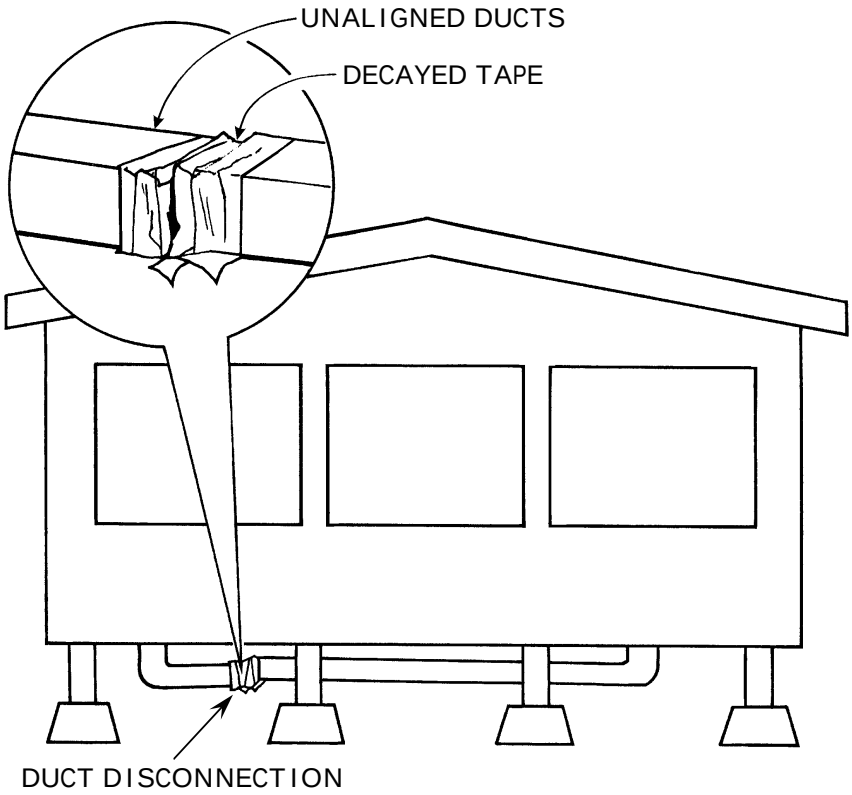

20. HEATING UNIT INTEGRITY

- **Loose items shall be tightened (e.g., screws, bolds, panels, etc.).**
- **Missing, defective or damaged components critical to proper operation shall be replaced or repaired (e.g., access door, roll-out shield, observation plate/gasket, etc.).**
- **Improper alterations that adversely affect unit operation or safety shall be corrected.**

21. RETURN AND SUPPLY

- **Return leaks in plenum/cabinet/duct that could draw in combustion products or other pollutants shall be repaired.**
- **Dirty blower chamber and fan blades shall be cleaned.**
- **Evaporator Section**
  - Evaporator coil shall be clean.
  - Penetrations shall be sealed (i.e., with cork tape).

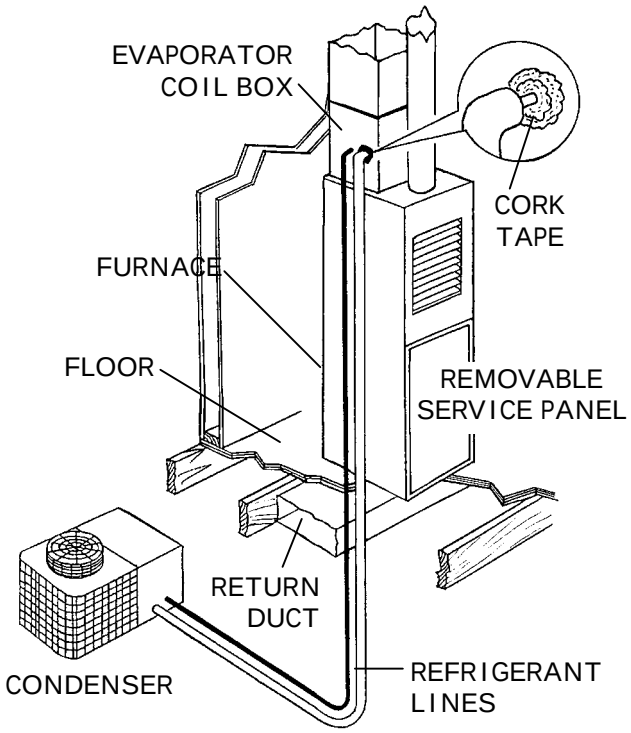

22. GAS CONTROL VALVE

- **The valve shall turn properly and be free of leaks and electrical defects (e.g., short or open).**
- **Gas pressure shall comply with manufacturer's specifications.**

23. GAS PIPING AND VALVES

- **Joints, fittings, appliance line valve, rigid and flexible connector, and gas control valve shall be checked for gas leaks by:**
  - Leak detection liquid/spray, <u>or</u>
  - Electronic leak detector.
- **Nonconforming items, including the following, shall be replaced with materials conforming to applicable code requirements:**
  - Defective gas shutoff valve or pipe fittings.
  - Rigid or flexible copper connector.
  - Butt-soldered joints.

24. WIRING

- **Unit shall be free of wiring defects (e.g., frayed or burned wires, loose or improper connections, etc.).**
- **Splices shall be:**
  - Located in junction boxes.
  - Secured with pressure splicing connectors (e.g., wire nuts).
- **Aluminum/copper splices shall <u>not</u> be made *unless:***
  - Splicing connectors used are identified for that purpose.
  - Conditions of use are met (e.g., application of antioxidant).

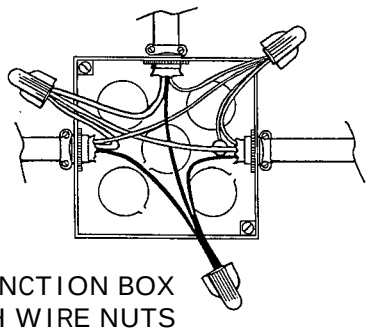

SPLICES IN JUNCTION BOX
SECURED WITH WIRE NUTS

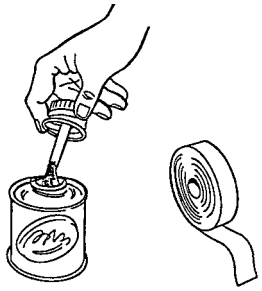

ANTIOXIDANT AND
ELECTRICIAN'S TAPE

25. PILOT AND THERMOCOUPLE OR PILOT GENERATOR

- **Thermocouple or pilot generator shall be correctly positioned in pilot flame.**
- **Pilot flame shall be properly adjusted.**
- **Voltage output shall be within specifications for proper operation of the Gas Control Valve.**

26. THERMOSTATS AND CONTROLS

- **Wall thermostat shall function properly:**
  - Anticipator correctly set to 24 volt heating control circuit amperage, when applicable.
  - Wiring connections correct and tight.
  - Unit level and securely installed.
- **Furnace controls, including limit switch and blower fan switch, shall operate in accordance with manufacturer's specifications.**
- **Power switches shall function properly, including:**
  - Blower access lockout/safety switch.
  - Switch controlling power to the unit (disconnect).
  - Blower speed control switch.

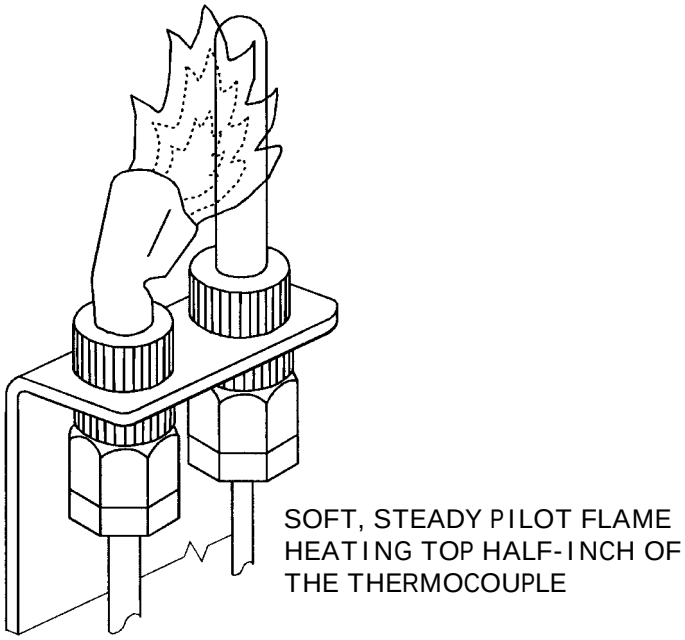

27. HEAT EXCHANGER

- **Heat exchanger shall be visually inspected for evidence of damage, deterioration, obstruction, etc.**
  - Mirror and a light shall be used, at a minimum.
  - A more sophisticated analysis shall be performed when necessary (e.g., smoke bomb or heat exchanger removal).
- **Observation shall be made for flame interference when blower starts.**

28. FLUE/VENT SYSTEM

- **Flue and vent systems shall:**
  - Be in conformance with MHCSS and HCD requirements.
  - Terminate at least 3' from an evaporative cooler intake.
- **Flue and vent system defects, including those listed below, shall be corrected.**
  - All Furnaces
    - Obstructions, disconnections, deterioration, leaks, etc.
    - Damaged/missing cap, or improper termination.
    - Inadequate clearance from combustibles.
    - Single-wall pipe used where double-wall is required.
  - Open Combustion Furnaces
    - Misaligned, defective, or multiple draft hoods.
    - Excessive soot or rust in or near the draft hood.

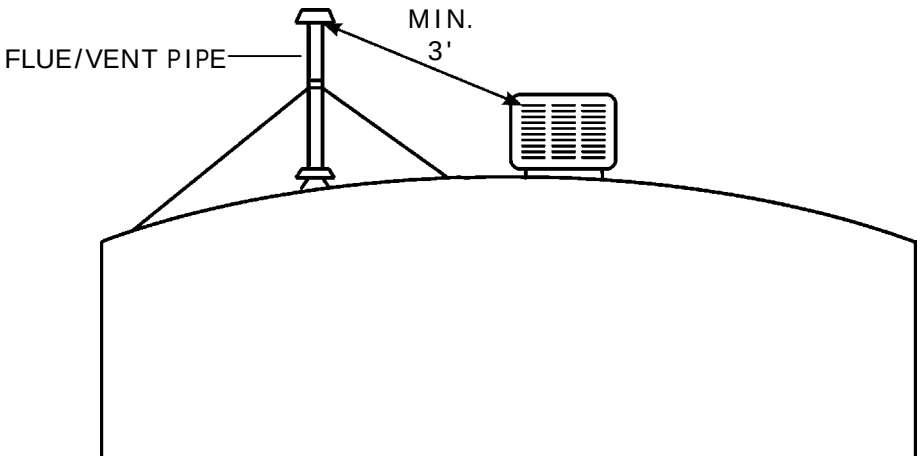

28. FLUE/VENT SYSTEM (continued)

- **Flue/Vent Pipe Connections**
  - All connections shall be secure.
  - Single-wall pipe connections shall be mechanically secured with three evenly-spaced sheet metal screws when:
    - New components are installed.
    - Existing connections are found to be loose/unsafe.
  - Double-wall pipes shall not be drilled or have screws installed, *except* as permitted/specified by the manufacturer.

29. COMBUSTION AIR

- **Adequate combustion air shall be available to the furnace in accordance with Item ~~109~~.**
- **Combustion air for open combustion appliances shall be isolated from FAU return air in accordance with Item 10.**

30. BLOWER SECTION

- **The following conditions shall be corrected as needed to ensure proper operation of the unit:**
  - Dirty blower chamber and/or fan blades.
  - Evidence of loose or unsafe wiring.
  - Bearings in need of lubrication.

31. EVAPORATOR SECTION

- **Evaporator coil shall be clean.**
- **Plumbing and wiring penetrations shall be sealed with cork tape.**

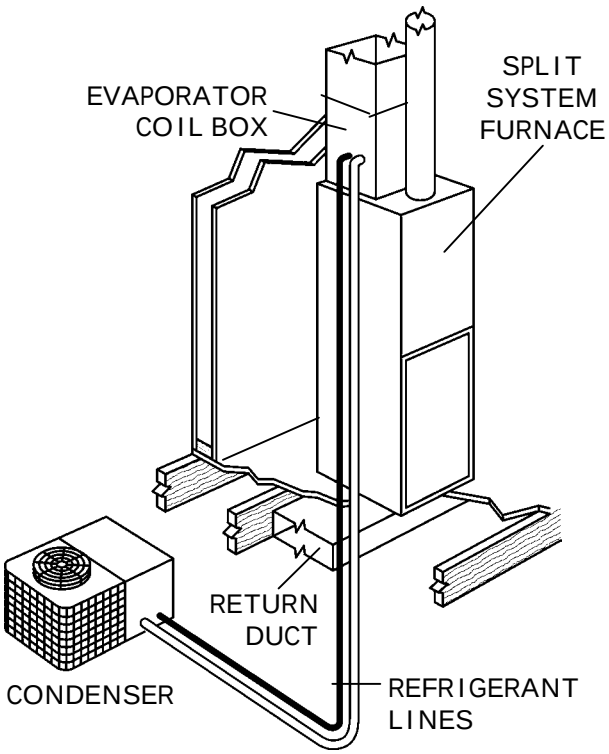

32. BURNERS

- **The furnace shall be checked for evidence of combustion problems, such as the following, and necessary corrections shall be made.**
- ***Burner Performance***
  - *When the burner(s) ignite, checks shall be made for:*
    - *Delayed ignition.*
    - *Excessive roll-out.*
  - *Burner(s) shall be examined for flame abnormalities, including:*
    - *Large yellow flame (more than 50% yellow).*
    - *Soft lazy flame or smothering flame.*
- ***Carbon and Rust***
  - *The top of the burner(s), the heat exchanger, draft hood and flue/vent pipe shall be examined for excessive amounts of carbon or rust.*

  ~~· Presence of excessive soot or rust.~~

  ~~· Abnormal flame impingement and/or odor of aldehydes.~~

  ~~· Large yellow flame, soft lazy flame, or other abnormality.~~

  ~~· Delayed ignition, or rollout ignition.~~
- **Burners and venturies shall be clean, and ports shall be unobstructed.**
- **Burners shall be correctly aligned/positioned.**
- **Burner Operation**
  - Air shutters shall be clean and adjusted for correct air/gas mixture.
  - Gas pressure shall comply with manufacturer's specifications.
  - Burner shall not be under- or over-fired.
  - CO in flue gas shall be within limits specified by:
    - Manufacturer's instructions, and
    - ~~The~~ LIEE ~~Policies & Procedures~~*WIS Section 1, NGAT*.

33. APPLIANCE DRAFT

- **Open Combustion Natural Draft Furnaces**
  - Drafting shall be checked and verified to be acceptable, utilizing a Visual/Smoke Draft Test in accordance with WIS Section 1.

[Graphic temporarily moved to next page]

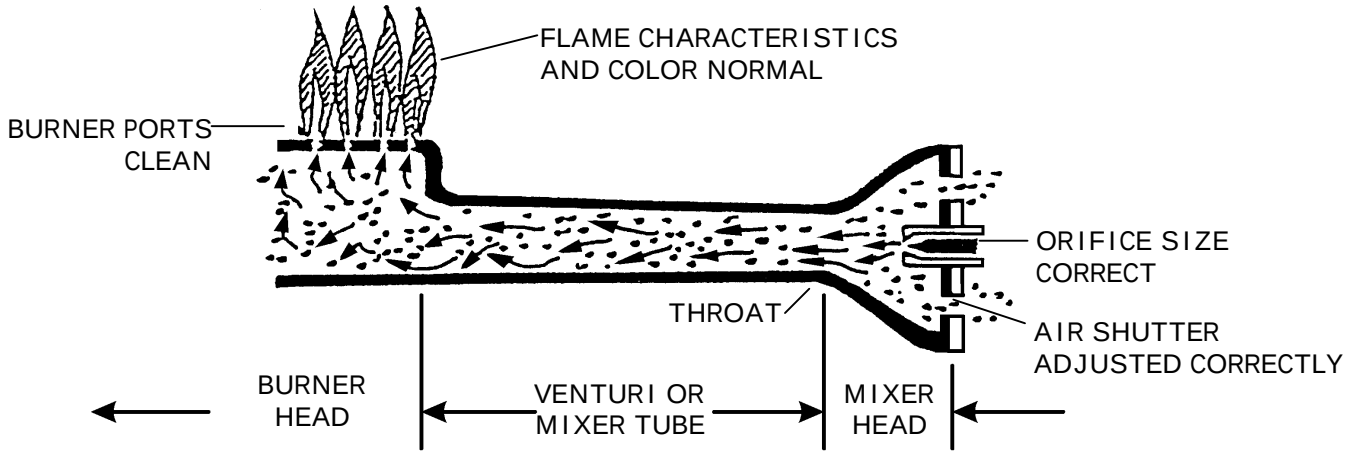
FLAME CHARACTERISTICS
AND COLOR NORMAL
BURNER PORTS
CLEAN
ORIFICE SIZE
CORRECT
THROAT
AIR SHUTTER
ADJUSTED CORRECTLY
BURNER
HEAD
VENTURI OR
MIXER TUBE
MIXER
HEAD

PART 5: NEW AIR CONDITIONER INSTALLATION WHEN COMBINED HEATING AND AIR CONDITIONING SYSTEM IS REPLACED

34. SIZING CRITERIA

- **System Size**
  - Unit shall be properly sized ~~by the Contractor in accordance with ACCA Manual J and Manual S procedures.~~*in accordance with Title 24, HCD requirements, or local code, whichever is most stringent.*
  - *Exception:* The tonnage of the new system should ~~never~~ be *equal to* ~~larger~~ *or smaller* than the existing system.
- **Refrigerant Lines**
  - Shall be properly sized per manufacturer's specifications.
  - Shall provide the rated EER for the combination condenser and evaporator coil match.

35. EVAPORATOR (INDOOR) COIL AND CONDENSER (OUTDOOR) COIL

- **Split Systems**
  - An evaporator coil shall be installed which is verified to be a rated match with the condenser unit, as listed in current ARI Directory.
  - The coil label shall be visible.
  - Condenser coil and evaporator coil shall be verified to function properly.
  - An access panel shall be provided for cleaning.
- **Evaporator Coil Replacement**
  - Prior to charging, vacuum shall be drawn on the refrigerant lines to test for leaks and remove water vapor.
  - Depth of vacuum and length of time shall be as specified by the manufacturer.

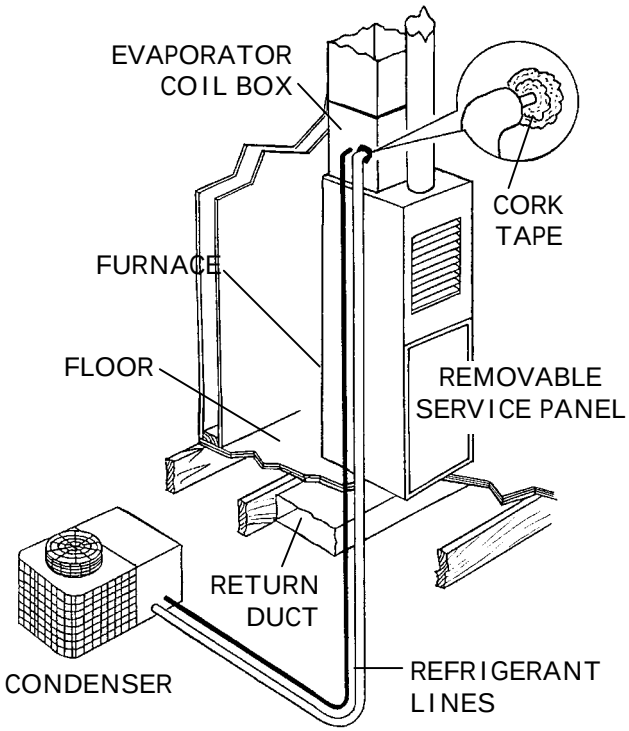

36. OPERATIONAL REQUIREMENTS

- **Air Flow**
  - Air flow through the indoor coil shall be adequate to meet manufacturer's specifications.
- **Refrigerant System Charging**
  - Refrigerant system shall be properly charged using methods specified by the manufacturer.
  - Refrigerant recovery shall be performed in accordance with Federal law.
    - A recovery device shall be used.
    - Ventilation to the atmosphere is not allowed.
  - Technicians performing evacuation and charging must have EPA-approved certification as a Type II or Universal technician.

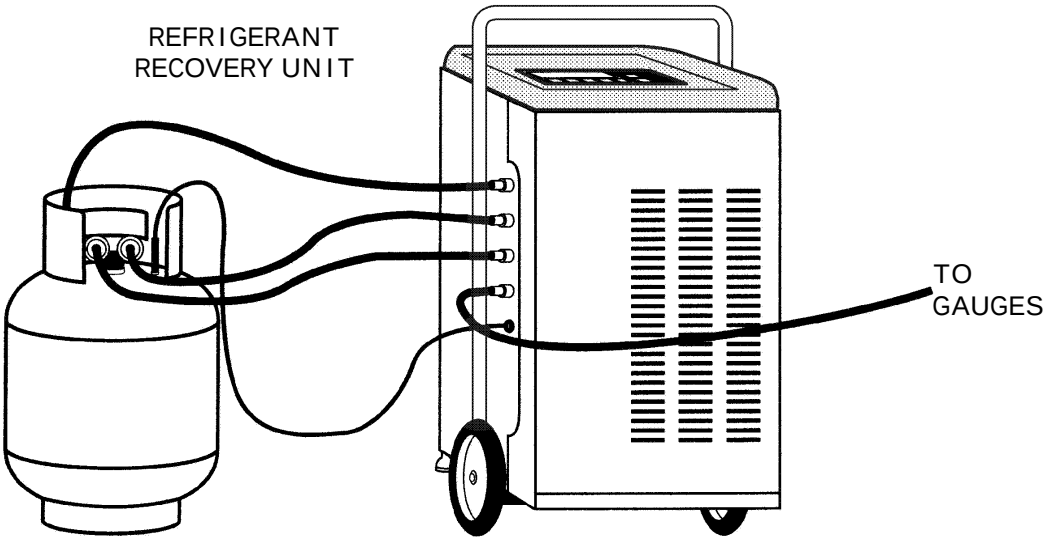

37. AIR DISTRIBUTION SYSTEM

- ***Existing Duct System***
  - *System shall be examined for leaks and disconnections and~~brought into conformance with LIEE duct leakage requirements~~ repaired as needed in accordance with the program Policy and Procedures.*
  - *Testing shall be performed in accordance with WIS Section 11, Duct Testing Standards, and duct repairs and sealing shall be made in accordance with WIS Section 17, Duct Sealing Standards.*
- ***Return System***
  - *Belly-Cavity and Roof-Cavity Returns*
    - *In accordance with the program Policy and Procedures:*
      - *Existing belly-cavity return shall be abandoned, and a new ducted central return shall be installed.*
      - *Existing leaky roof-cavity return shall be repaired as applicable, and replaced with a new central return when repair is needed but not feasible.*
  - *New central return shall be designed and installed in conformance with~~applicable standards~~ WIS Section 17 and HCD requirements.*
- ***Cabinet and Plenum***
  - *Components shall be mechanically attached and sealed around the perimeter (cabinet-to-duct connector, cabinet-to-plenum) using materials and methods prescribed in ~~on~~ WIS Section 17.*
  - *Plumbing and wiring penetrations into the evaporator coil box and return air chamber shall be sealed with cork tape.*
- ***New Ductwork***
  - *Components shall be installed in conformance with manufacturer's instructions.*

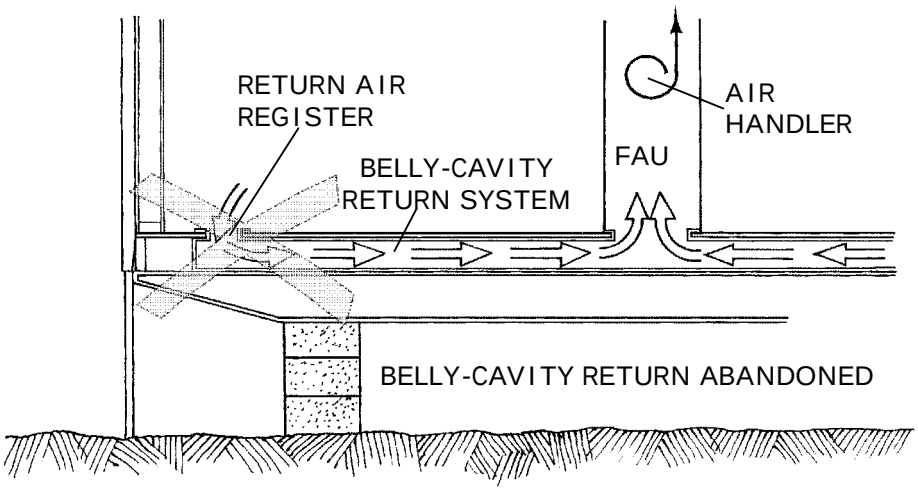

38. SELF-CONTAINED AIR CONDITIONERS

- ***Installation of a self-contained air conditioner sharing a common supply duct system with the furnace shall comply with the following requirements:***
  - *Automatic Dampers*
    - *Furnace shall have an automatic damper installed to prevent cold air from entering the furnace when the HVAC system is in cooling mode.*
    - *Air conditioner shall have an automatic damper installed to prevent hot air from entering the air conditioning unit when the HVAC system is in heating mode.*
  - *Function Control*
    - *Controls shall prevent the air conditioner and furnace from coming on at the same time.*

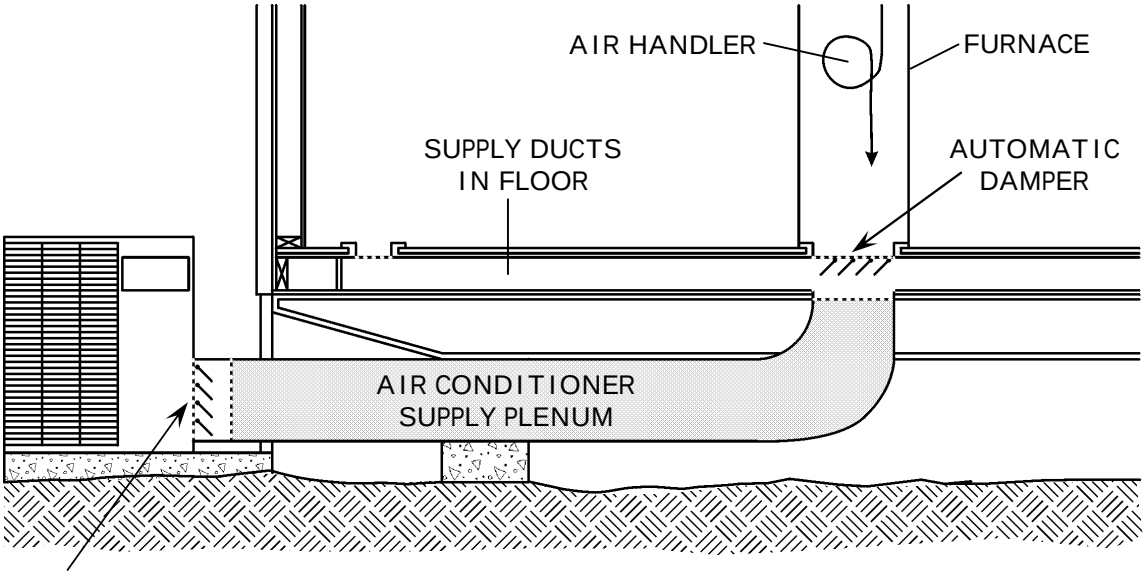

SELF-CONTAINED AIR CONDITIONER
WITH SIDE-BY-SIDE SUPPLY & RETURN PLENUMS

39. ELECTRICAL WIRING, GROUNDING, AND ACCESSIBILITY

- **Electrical wiring, grounding, and unit accessibility shall be in conformance with:**
  - *Manufacturer's instructions,*
  - *HUD MHCSS, Section 3280, Subpart I, and/or as applicable*
  - *Requirements of the local building department.*

40. UNIT DISCONNECTING MEANS (SERVICE DISCONNECT)

- **Outdoor Installations (Split System Condenser or Self-Contained Air Conditioner)**
  - *A disconnecting means which is capable of disconnecting the air-conditioning equipment from the circuit feeder shall be installed in conformance with NEC Article 440, Part B, Disconnecting Means.*
- **Location**
  - *The service disconnect:*
    - *Shall be located within sight from and readily accessible from the air-conditioning equipment or as required by the local jurisdiction.*
    - *May be installed on or within the air-conditioning equipment.*
- **Rating**
  - *The rating of the installed fuses or circuit breakers shall not exceed:*
    - *The overcurrent rating of the installed air-conditioning equipment.*
    - *The rating of the box in which they are located.*

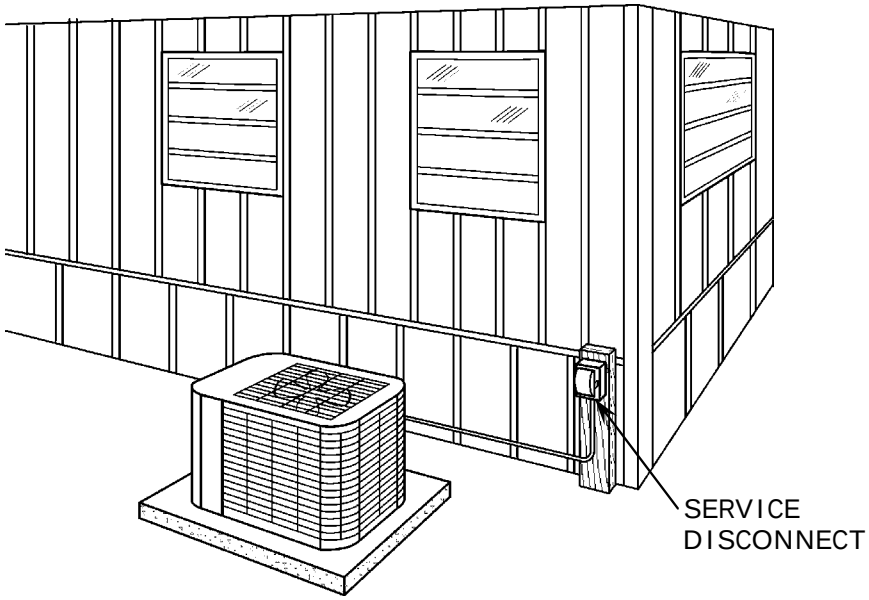

SPLIT SYSTEM REPLACEMENT CONDENSER UNIT

41. BRANCH-CIRCUIT PROTECTION

- ***General Requirements***
  - *Air-conditioning equipment shall be provided with:*
    - *Overcurrent protection per NEC Article 240.*
    - *Disconnecting means per NEC Article 440, Part B.*
    - *Branch-circuit short-circuit and ground-fault protection per NEC Article 440, Part C.*
- ***Protection Device Type***
  - *The overcurrent protection device shall be the type specified on the air-conditioning equipment nameplate (see Table 21-1).*
  - *When nameplate specifies an HACR circuit breaker, the installed circuit breaker shall be listed and labeled HACR type (suitable for use with heating, air-conditioning and refrigeration equipment).*
- ***Protection Device Rating***
  - *The branch-circuit protection device shall not exceed the maxi-mum amperage rating specified on the nameplate of the air-conditioning unit.*

TABLE 18-1: OVERCURRENT PROTECTION SELECTION GUIDE

HEAT PUMP UNIT NAMEPLATE MARKED:	OVERCURRENT PROTECTION DEVICE* MUST BE:
"Maximum Fuse Size _X_ Amps"	An _X_ Amp Fuse
"Maximum Fuse or HACR Circuit Breaker _X_ Amps"	An _X_ Amp Fuse or HACR-Type Circuit Breaker
"Maximum Fuse, HACR Circuit Breaker, or Circuit Breaker _X_ Amps"	An _X_ Amp Fuse, HACR-Type Circuit Breaker, or Standard Circuit Breaker
"Maximum Overcurrent Protection Device _X_ Amps"	An _X_ Amp Fuse, HACR-Type Circuit Breaker, or Standard Circuit Breaker

***Amperage rating of the device must not exceed that specified on the nameplate.**

42. BRANCH CIRCUIT CONDUCTORS

- **Ampacity and Rating of Conductors**
  - Minimum wire size shall, as applicable, be:
    - Selected from NEC Tables 310-16 through 310-19, or
    - Calculated in accordance with NEC Section 310-15.
- **Voltage Drop and Wire Length**
  - Circuits shall be installed in conformance with NEC Section 210, Branch Circuits and Section 215, Feeders.
  - The voltage drop over the branch-circuit conductor should not exceed 2%. (See NEC Section 210-19(a) (Fine Print Note No. 4).)
  - In 240v circuits, the maximum conductor length should not exceed the values given in the Table 18-2.

TABLE 18-2: MAXIMUM LENGTH OF CIRCUIT (IN FEET)

WIRE SIZE	AMPACITY OF CIRCUIT			
AWG	15	20	30	40
12	160'	120'	–	–
10	250'	190'	130'	–
8	300'	225'	150'	115'

Notes:

- **The table is based on a 4.6v drop (230v X 2% = 4.6v).**
- **The table applies to non-plated (uncoated) solid wire copper conductors at 75°C (167°F) ambient temperature.**
- **For alternate conditions or conductors, use applicable CEC Tables (e.g., see Article 210, "Branch Circuits"; Article 215, "Feeders"; and Chapter 9, Table 8, "Conductor Properties").**

43. MOUNTING OF OUTDOOR EQUIPMENT

- ***Ground Mount***
  - *Air-conditioning equipment shall be installed in conformance with UMC Section 1106.0.*
  - *The unit shall rest on concrete or other approved base extending at least 3" above the adjoining ground level.*
- ***Protection***
  - *Units subject to mechanical damage shall be protected in conformance with UMC Section 308.*
  - *Unit shall be attached to base with seismic straps, when required by applicable code.*
- ***Overhead Clearance***
  - *Overhead clearance shall be provided in conformance with manufacturer's specifications and local code.*

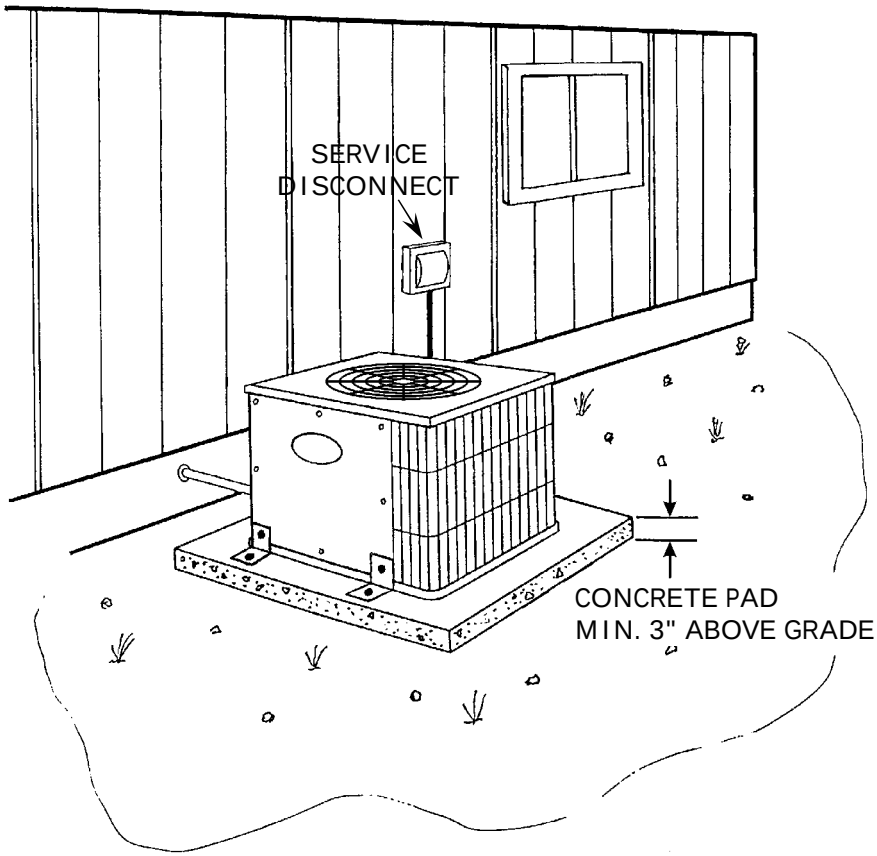

44. FUEL-GAS PIPING

- ***All Installations***
  - *Gas lines, fittings and valves shall be free of leaks.*
  - *New lines shall be pressure-tested.*

45. COMBUSTION APPLIANCE REQUIREMENTS

- ***Flue and Vent Systems***
  - *New flue/vent system shall be selected, installed and secured in conformance with listing specifications, manufacturer's instructions, and HCD requirements.*
- ***Combustion Air***
  - *Combustion air for installed units, and all other appliances sharing the same space/enclosure, shall be supplied in conformance with manufacturer's instructions and HCD requirements.*
  - *Combustion air vents shall be free of obstructions that interfere with proper venting.*

ELECTRONIC LEAK DETECTOR

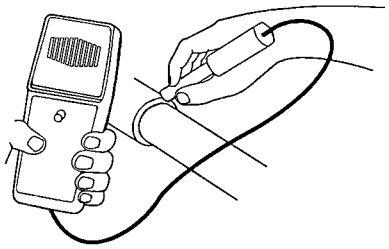

BUBBLE LEAK DETECTION

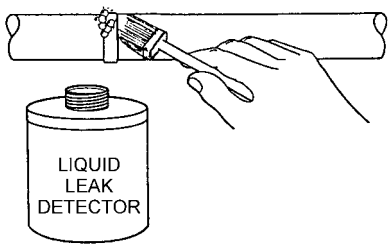

METHODS FOR FINDING LEAKS IN
GAS LINES, FITTINGS, AND VALVES

~~39. ELECTRICAL WIRING~~

~~-All electrical wiring shall be installed in conformance with manufacturer's instructions, HUD MHCSS Section 3280, Subpart I, and, as applicable, requirements of the local building department.~~

~~-Service Receptacle~~

~~·A 120-volt service receptacle shall:~~

~~-Be located within 25' of the equipment.~~

~~-Be on the same level as the equipment.~~

~~-Not be connected on the load side of the disconnect.~~

~~-Grounding~~

~~·Exposed noncurrent-carrying metal parts shall be grounded in compliance with CEC Article 250, Part J., Grounding Conductors (Sections 250-91 through 250-99), and Part K., Grounding Conductor Connections (Sections 250-112 through 250-119).~~

~~·Parts of the equipment capable of carrying electrical current shall be grounded to the service ground by a continuous:~~

~~-metal raceway,~~

~~-wire, or~~

~~-appropriate conductor in a cable assembly.~~

~~·Connections and splices in the grounding conductor shall:~~

~~-Be made in compliance with the CEC and HCD.~~

~~-Provide a continuous path to the service ground with all disconnects and controllers in the open position.~~

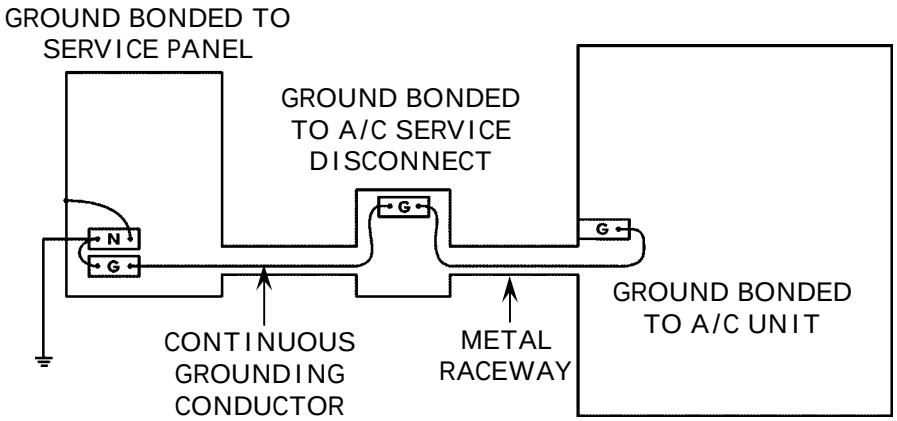

CONTINUOUS GROUNDING PATH FROM SERVICE PANEL TO A/C UNIT PROVIDED BY CONDUCTOR OR RACEWAY

~~40. UNIT DISCONNECTING MEANS (SERVICE DISCONNECT)~~

~~**-All Installations**~~

~~· A disconnecting means which is capable of disconnecting the air-conditioning equipment from the circuit feeder shall be installed in conformance with NEC Article 440, Part B, Disconnecting Means.~~

~~**-Location**~~

~~· The service disconnect:~~

~~-Shall be located within sight from and readily accessible from the air-conditioning equipment or as required by the local jurisdiction.~~

~~-May be installed on or within the air-conditioning equipment.~~

~~**-Rating**~~

~~· The rating of the installed fuses or circuit breakers shall not exceed:~~

~~-The overcurrent rating of the installed air-conditioning equipment.~~

~~-The rating of the box in which they are located.~~

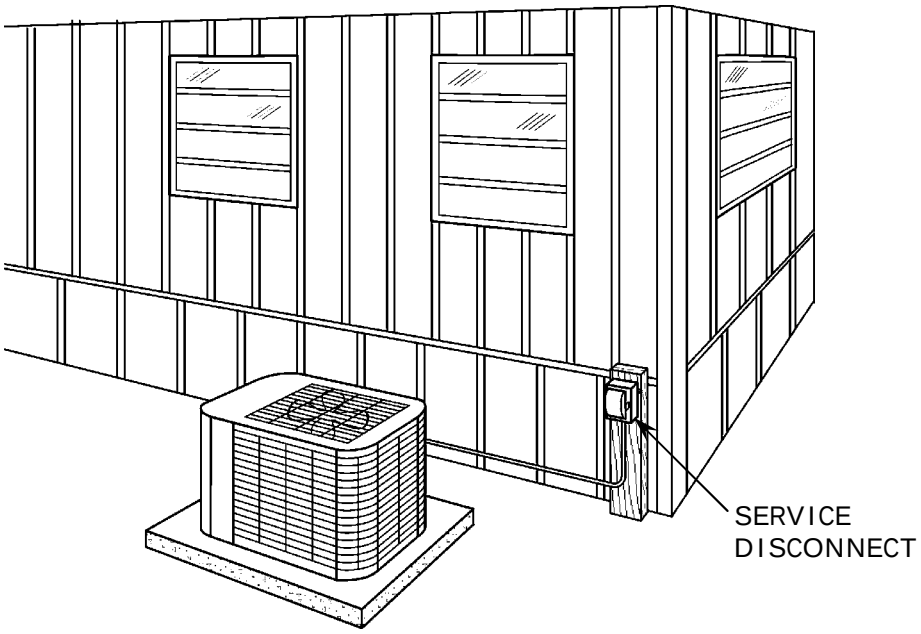

SPLIT SYSTEM REPLACEMENT CONDENSER UNIT

~~41. BRANCH-CIRCUIT PROTECTION~~

~~-General Requirements~~

~~· Air-conditioning equipment shall be provided with:~~

~~-Overcurrent protection per NEC Article 240.~~

~~-Disconnecting means per NEC Article 440, Part B.~~

~~-Branch-circuit short-circuit and ground-fault protection per NEC Article 440, Part C.~~

~~-Protection Device Type~~

~~· The overcurrent protection device shall be the type specified on the air-conditioning equipment nameplate (see Overcurrent Protection Selection Guide below).~~

~~· When nameplate specifies an HACR circuit breaker, the installed circuit breaker shall be listed and labeled HACR type (suitable for use with heating, air-conditioning and refrigeration equipment).~~

~~-Protection Device Rating~~

~~· The branch-circuit protection device shall not exceed the maxi-mum amperage rating specified on the nameplate of the air-conditioning unit.~~

~~OVERCURRENT PROTECTION SELECTION GUIDE~~

~~HEAT PUMP UNIT NAMEPLATE MARKED:~~	~~OVERCURRENT PROTECTION DEVICE* MUST BE:~~
~~"Maximum Fuse Size _X_ Amps"~~	~~An _X_ Amp Fuse~~
~~"Maximum Fuse or HACR Circuit Breaker _X_ Amps"~~	~~An _X_ Amp Fuse or HACR-Type Circuit Breaker~~
~~"Maximum Fuse, HACR Circuit Breaker, or Circuit Breaker _X_ Amps"~~	~~An _X_ Amp Fuse, HACR-Type Circuit Breaker, or Standard Circuit Breaker~~
~~"Maximum Overcurrent Protection Device _X_ Amps"~~	~~An _X_ Amp Fuse, HACR-Type Circuit Breaker, or Standard Circuit Breaker~~

~~*Amperage rating of the device must not exceed that specified on the nameplate.~~

~~42. BRANCH CIRCUIT CONDUCTORS~~

~~-Ampacity and Rating of Conductors~~

~~· Minimum wire size shall, as applicable, be:~~

~~-Selected from NEC Tables 310-16 through 310-19, or~~

~~-Calculated in accordance with NEC Section 310-15.~~

~~-Voltage Drop and Wire Length~~

~~· Circuits shall be installed in conformance with NEC Section 210, Branch Circuits and Section 215, Feeders.~~

~~· The voltage drop over the branch-circuit conductor should not exceed 2%. (See NEC Section 210-19(a) (Fine Print Note No. 4).)~~

~~· In 240v circuits, the maximum conductor length should not exceed the values given in the table below.~~

~~MAXIMUM LENGTH OF CIRCUIT (IN FEET)~~

~~WIRE SIZE~~	~~AMPACITY OF CIRCUIT~~				
~~AWG~~	~~15~~	~~20~~	~~30~~	~~40~~	~~50~~
~~12~~	~~160'~~	~~120'~~	~~80'~~	~~–~~	~~–~~
~~10~~	~~250'~~	~~190'~~	~~130'~~	~~95'~~	~~–~~
~~8~~	~~300'~~	~~225'~~	~~150'~~	~~115'~~	~~90'~~

~~**Notes:**~~

- ~~**The table is based on a 4.6v drop (230v X 2% = 4.6v).**~~
- ~~**The table applies to non-plated (uncoated) solid wire copper conductors at 75°C (167°F) ambient temperature.**~~

~~**For alternate conditions or conductors, use applicable NEC Tables (e.g., see Article 210, "Branch Circuits"; Article 215, "Feeders"; and Chapter 9, Table 8, "Conductor Properties").**~~

~~43. SELF-CONTAINED AIR CONDITIONERS~~

~~**Installation of self-contained air conditioner sharing a common duct system with heating system shall comply with the following requirements:**~~

- ~~Furnace shall have automatic damper installed to prevent cold air from entering when system is in cooling mode.~~
- ~~Air conditioner shall have an automatic damper installed to prevent hot air from entering when system is in heating mode.~~
- ~~Controls shall prevent air conditioner and furnace from operating simultaneously.~~

~~44. MOUNTING OF EQUIPMENT~~

~~-Ground Mount~~

~~· Air-conditioning equipment shall be installed in conformance with UMC Section 1504.~~

~~· The unit shall rest on concrete or other approved base extending at least 3" above the adjoining ground level.~~

~~-Protection~~

~~· Units subject to mechanical damage shall be protected in conformance with UMC Section 508.~~

~~· Unit shall be attached to base with seismic straps.~~

~~-Overhead Clearance~~

~~· Overhead clearance shall be provided in conformance with manufacturer's specifications and local code.~~

~~45. PACKAGE UNIT FUEL-GAS PIPING~~

~~**-Gas lines, fittings, and valves shall be in conformance with Item 15.**~~

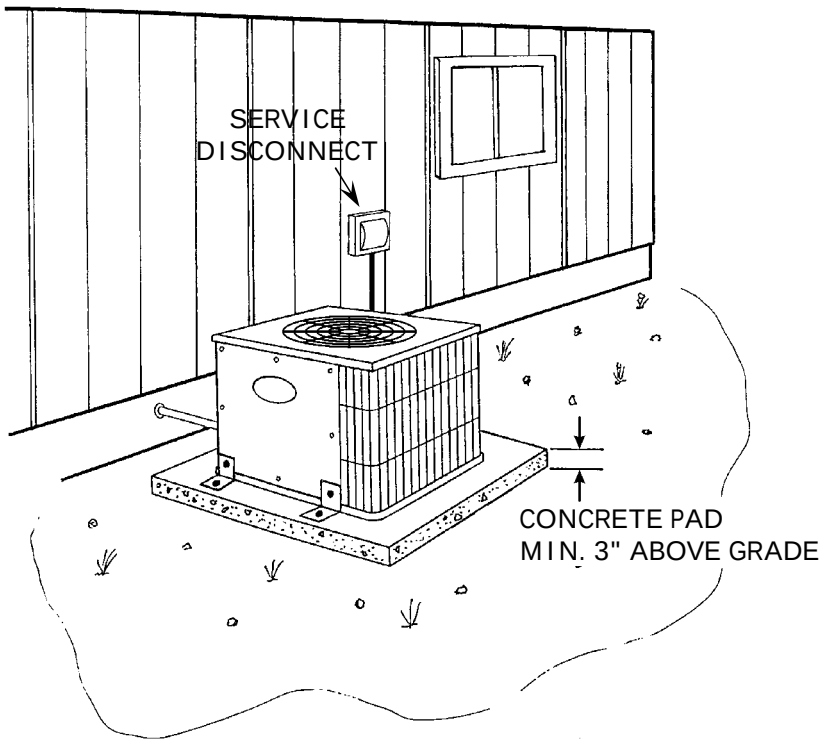

PART 6: WALL THERMOSTAT INSTALLATION

46. THERMOSTAT INSTALLATION

- **Location and Mounting**
  - New thermostat shall be installed at existing location unless affected by drafts, heat from direct sun, or adjacent appliances.
  - Thermostat installed in a new location:
    - Shall be mounted with the top of thermostat 60" above the floor when occupants are not handicapped.
    - May me installed as low as 48" above the floor when an occupant uses a wheelchair.
  - Thermostat shall be located away from direct sunlight, doors, windows, return/supply air, appliances, and sources of electrical interference.
  - Mounting bracket shall be securely attached to wall with screws for wood, or appropriate anchors for drywall and plaster.
  - Any holes or damage to wall from installation or removal of thermostat shall be repaired in a workmanlike manner.
- **Wiring**
  - All wiring shall be a minimum of 18 gauge and conform to manufacturer's specifications and ~~local codes~~*HCD requirements.*.
  - ~~All wiring shall be installed inside wall cavities when possible.~~
  - ~~When not inside a wall,~~ Exposed wiring shall be enclosed in a raceway.

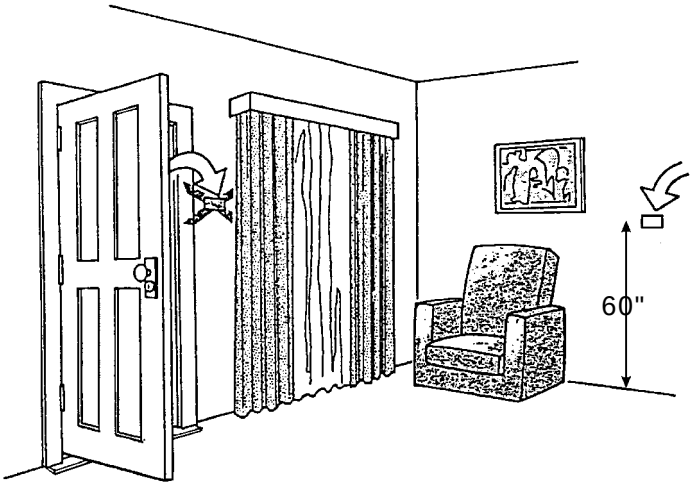

46. THERMOSTAT INSTALLATION (continued)

- **Programming and Operation**
  - Thermostat shall be cycled to insure proper operation of all functions.
  - Setbacks shall be programmed in accordance with customer's wishes.
- **Instructions and Warranty**
  - Customer shall be provided with:
    - A demonstration with verbal instructions for operating the thermostat and installing batteries.
    - The manufacturer's written instructions and warranty.

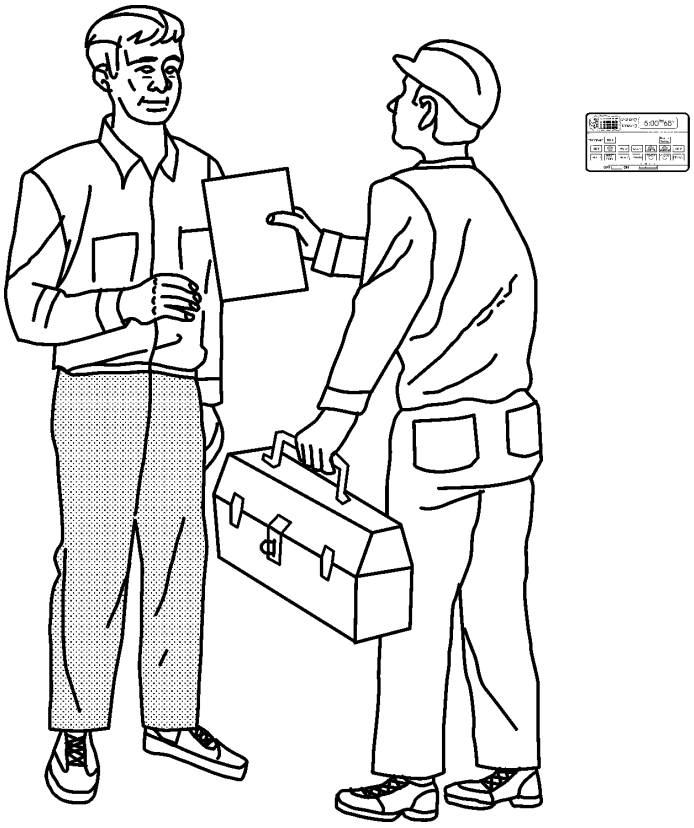

INSTRUCTIONS AND WARRANTY
PROVIDED TO CUSTOMER

PART 7: CENTRAL HEATING AND AIR CONDITIONER AIR FILTER INSTALLATION

47. HVAC UNITS

- **Reusable (Washable) Filters**
  - A reusable filter shall be installed when:
    - A proper filter retaining device is available.
    - Filter is not prohibited by the appliance manufacturer.
  - Filters shall be sized, supported, and installed per Items 48 and 49.
- **1" Bonded fiber**
  - Filter shall be installed only on:
    - Natural gas upflow furnaces equipped with air conditioning.
    - Electric furnaces and heat pumps.
  - The air handler shall be rated by the manufacturer for a 1" filter.
  - The return shall accommodate a 1" filter, which can be properly secured with standard retainer.
- **1/2" Bonded Fiber and Foam**
  - 1/2" bonded fiber shall be installed on downflow units when:
    - The return can accommodate the material.
    - It can be properly secured with standard retainer.
  - Foam shall be installed when:
    - The return will not accommodate 1/2" bonded fiber.
    - Bonded fiber is prohibited by the manufacturer.

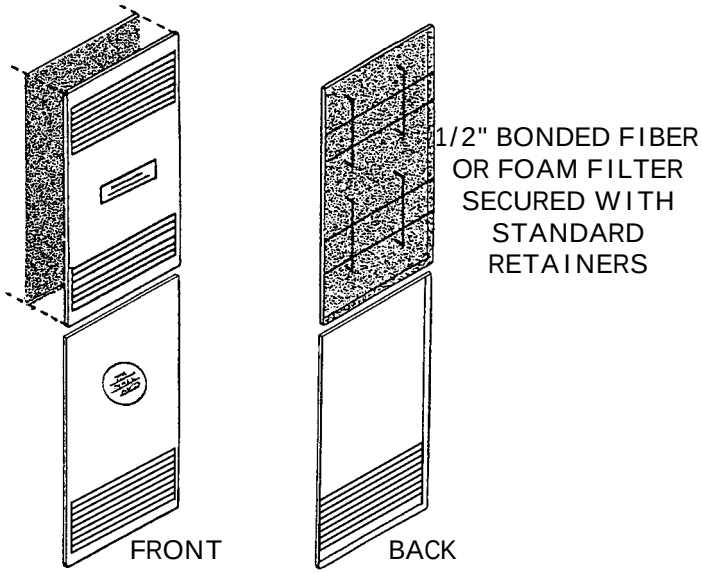

48. FILTER SIZE AND INSTALLATION

- **Size**
  - Unframed filters shall be cut for a snug fit with maximum 1/4" tolerance.
  - Framed filters shall fit within the filter housing without crimping or buckling.
- **Installation**
  - All filters shall be installed in conformance with appliance and filter manufacturer's instructions.
  - The coarse (“hairy”) side of “hog hair” type bonded fiber filters shall always face the incoming air.

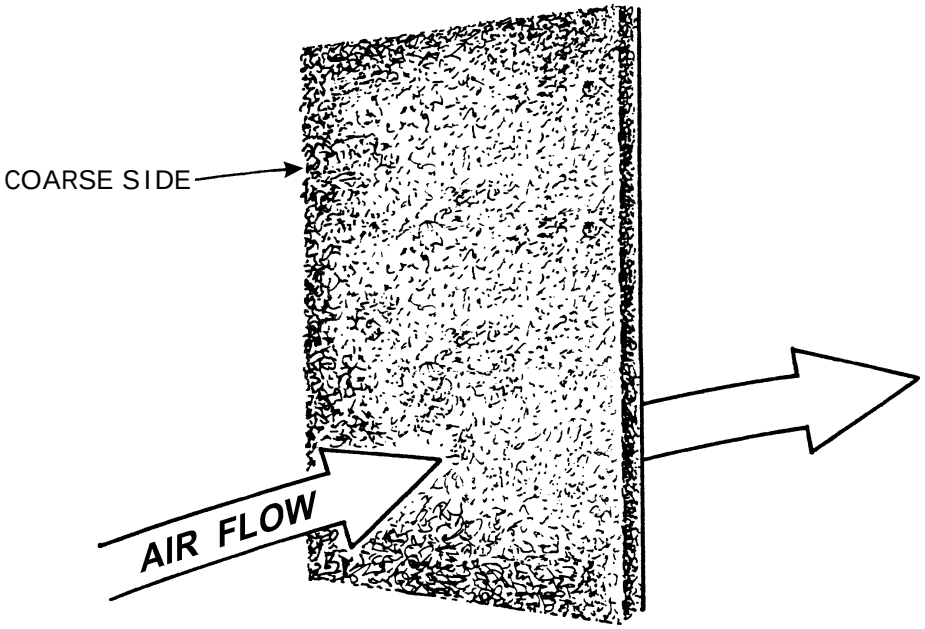

“HOG HAIR” TYPE
BONDED FIBER FILTER

49. UNFRAMED FILTER SUPPORTS

- **All Unframed Filters**
  - Unframed filters shall be supported, as needed, to prevent being drawn toward the air handler.
  - Manufacturer's instructions shall be followed.
- **1" Bonded Fiber Filters**
  - When not in conflict with appliance or filter manufacturer's instructions, steel rods (galvanized recommended) shall be internally installed, as needed, to stiffen filters over 20" long in either direction.
    - Support rods shall be:
      - Adequate gauge to provide the necessary stiffness.
      - Spaced a maximum of 20" on center.
      - Sized to fully extend from one edge of the filter to the other.
      - Inserted into the coarse filter layer near the netting side of “hog hair” type.
      - Inserted in the center of the filter medium, or per manufacturer's instructions, for other types.
  - At least one rod shall be positioned so that both ends are supported by a solid surface.
- **Other Materials**
  - Materials thinner than 1" shall be secured externally.
  - Filters shall not be installed when adequate support cannot be provided.

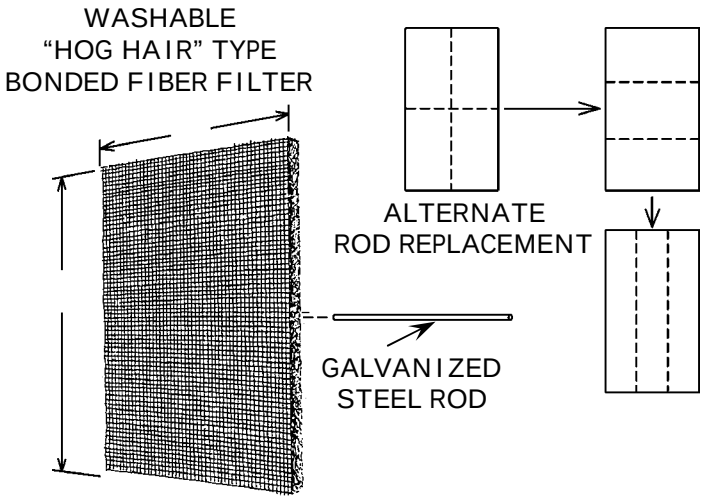

50. DUCTED HORIZONTAL AND VERTICAL 1" BONDED FIBER FILTERS

- **All Filters**
  - Filters shall be sized, supported, and installed per Items 48 and 49.
- **Unframed**
  - Internal support shall be installed as needed.
- **Framed**
  - Internal support not required.

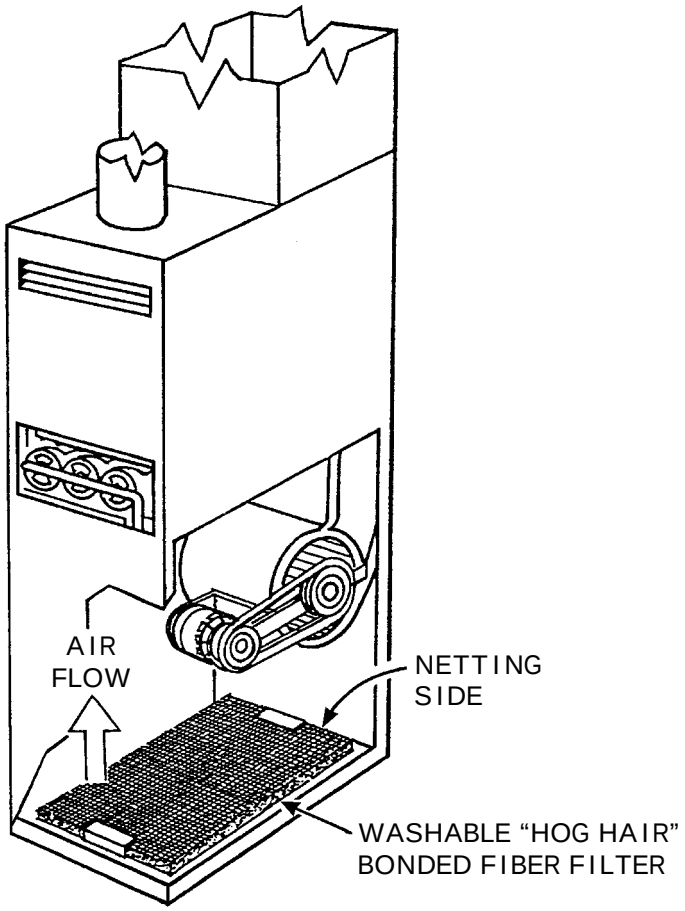

51. DUCTED RETURN INTAKES

- **All Filters**
  - Filters shall be sized, supported, and installed per Items 48 and 49.
- **Unframed**
  - Internal support shall be installed as needed.
- **Framed**
  - Internal support <u>not</u> required.

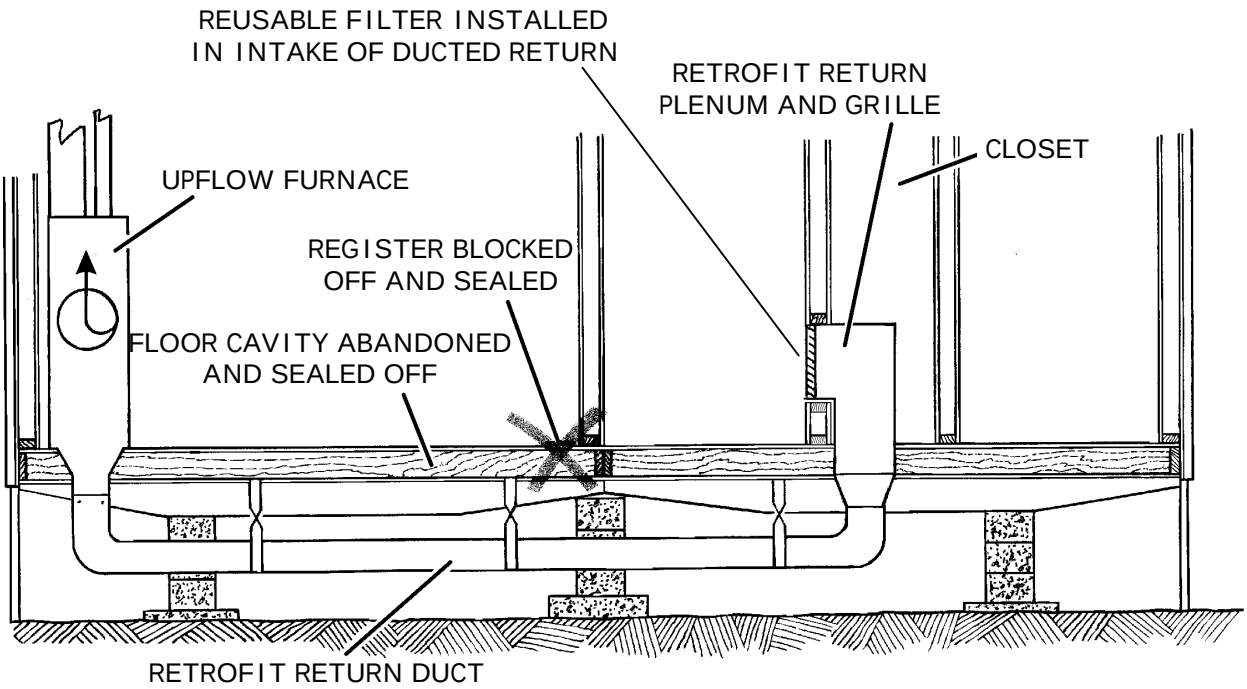

~~PART 8: CATASTROPHIC DUCT LEAKS AND DISCONNECTIONS~~

~~52. DUCTWORK INSPECTION~~

~~-The duct system shall be inspected for damage, disconnections and catastrophic leaks.~~

~~53. REPLACEMENT OF DAMAGED DUCTS~~

~~-Replacement Ducts~~

~~· Ducts shall be sized, installed and connected as prescribed in this section, HUD MHCSS Section 3280.715, and HCD regulations.~~

~~-Duct Supports~~

~~· All replacement ducts shall be installed and supported above the ground in conformance with manufacturer's instructions.~~

~~· Flexible ducts shall be supported at intervals not exceeding 4'.~~

~~-Metal support straps shall be at least 1-1/2" wide.~~

~~-Straps shall not constrict the internal diameter of the duct.~~

~~-Sag shall not exceed 2" between supports.~~

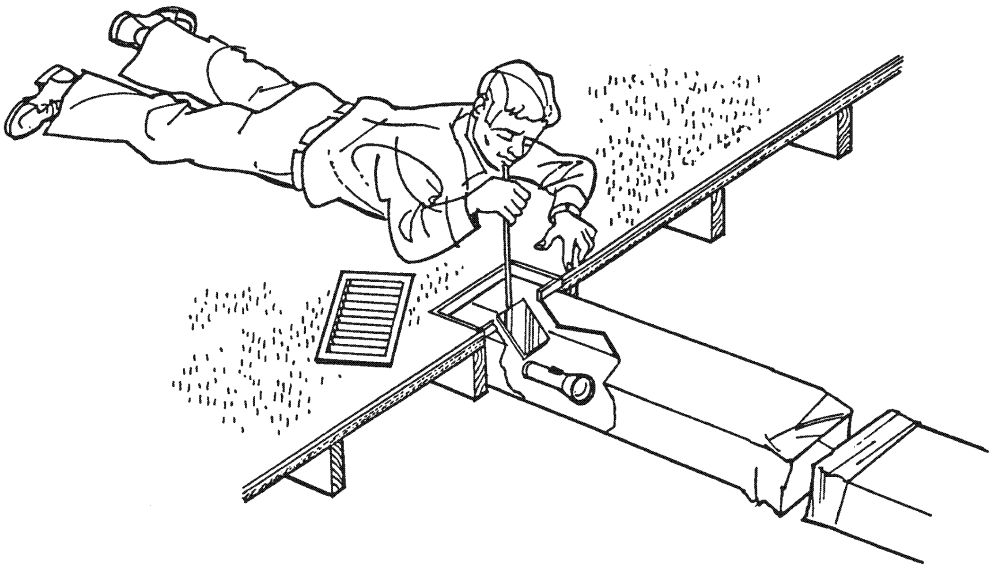

METHOD TO INSPECT FOR LEAKS AND DAMAGE
AND TO VIEW COMPLETED REPAIRS

~~54. SEALING WITH DUCT MASTIC~~

- ~~**Mastic shall be installed as prescribed by manufacturer:**~~
  - ~~With proper surface preparation/cleaning.~~
  - ~~Within temperature and moisture limitations.~~
  - ~~With proper setup time.~~
- ~~**Application**~~
  - ~~Gaps up to 1/8": Duct mastic alone may be used.~~
  - ~~Gaps over 1/8": Mastic shall be reinforced with fiberglass mesh tape.~~

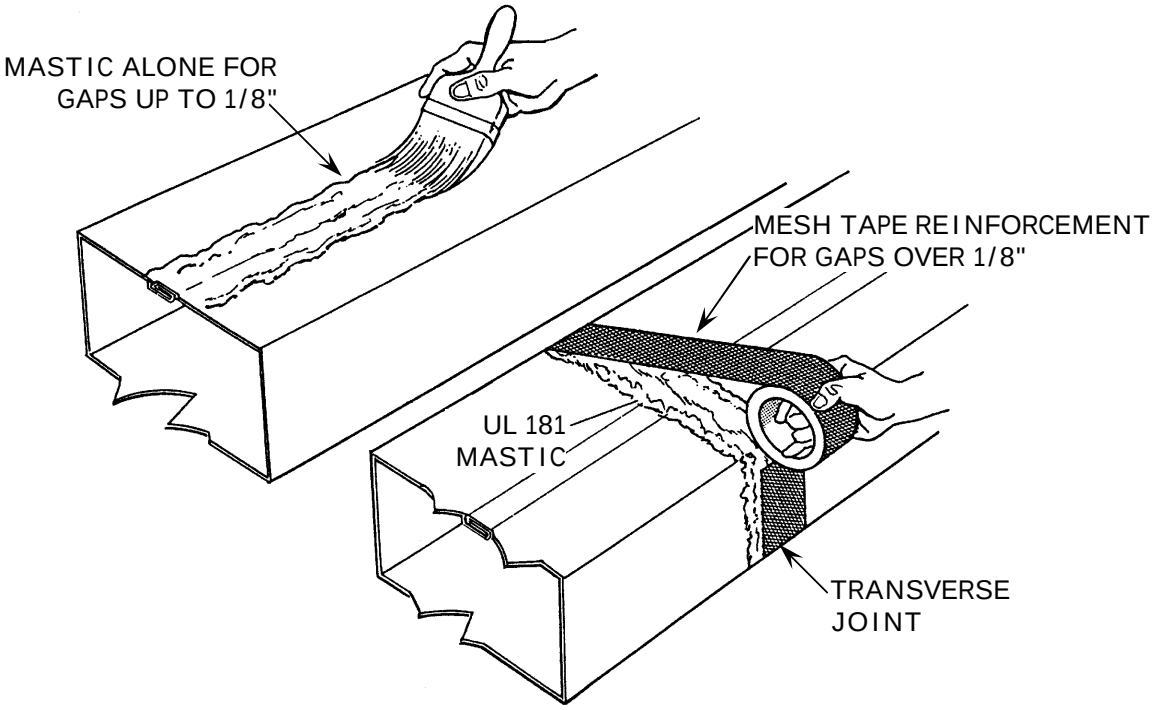

~~55. SEALING WITH PRESSURE-SENSITIVE TAPE~~

- ~~**Tapes shall be installed as prescribed by the manufacturer:**~~
  - ~~With proper surface preparation/cleaning.~~
  - ~~With recommended amount of pressure applied.~~
  - ~~Within temperature and moisture limitations.~~
- ~~**Application**~~
  - ~~At least three wraps of tape shall be applied when sealing:~~
    - ~~Joints in round or rectangular metal ducts.~~
    - ~~Flexible duct core-to-fitting attachments (with a drawband also installed to secure a nonmetallic flexible duct core).~~
    - ~~Vapor barrier (jacket) splices on flexible ducts.~~
  - ~~Successive wraps of tape shall be staggered and should overlap by 50 to 75% of the tape width.~~
- ~~**Gaps wider than 1/4" sealed with tape:**~~
  - ~~Duct mastic shall be applied at least 1/8" thick over the installed tape to provide additional strength and durability.~~
  - ~~Mastic shall extend beyond the width of the tape.~~

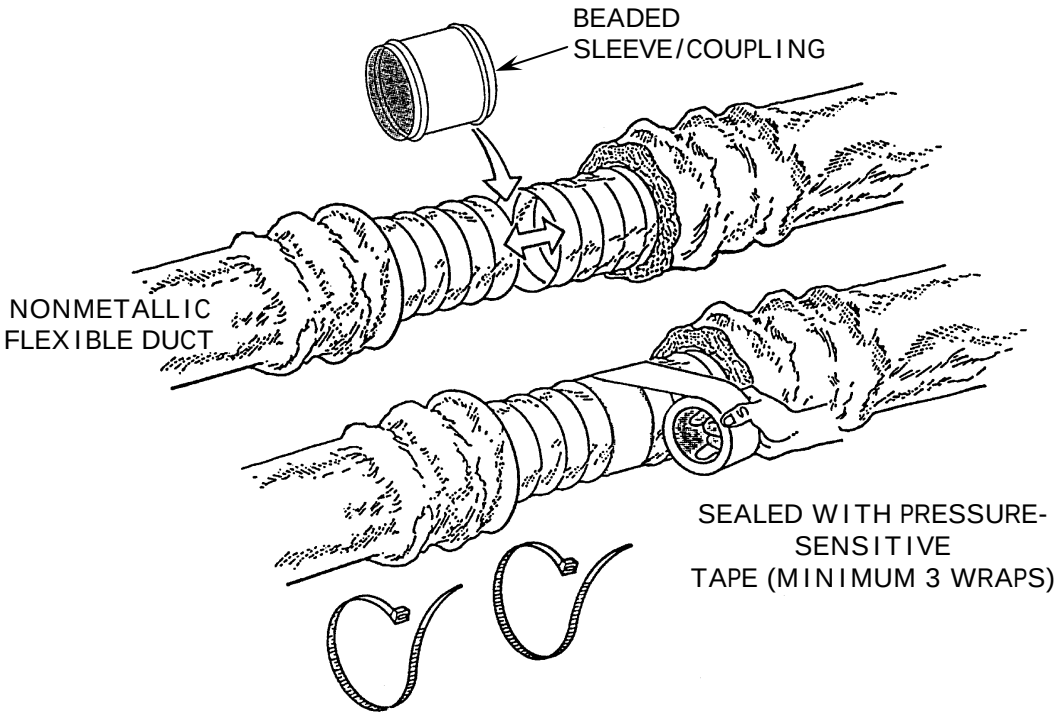

~~56. REPAIRING AND SEALING FLEXIBLE DUCTS~~

~~-Attachment of Nonmetallic Duct Core to *Beaded* Fitting~~

- ~~At least 2" of duct core shall be pulled onto fitting, with at least 1" extending past the bead.~~
- ~~Fitting must provide additional 1" wide area beyond duct core for application of tape or externally-applied mastic.~~
- ~~A drawband (or metal clamp) shall be:~~
  - ~~Placed behind the bead to secure the core onto the fitting.~~
  - ~~Tightened with an adjustable tensioning tool.~~

~~-Attachment of Nonmetallic Duct Core to Existing *Non-beaded* Fitting~~

- ~~Duct core shall be secured to the fitting with internally-placed mastic and a drawband, or~~
- ~~The core's wire coil shall be secured to the fitting with evenly-spaced #8 sheet metal screws installed through 181B-FX tape:~~
  - ~~3 screws for diameters up to 12".~~
  - ~~5 screws for diameters over 12".~~

~~-Flexible Metallic Duct Connections~~

- ~~Core shall be mechanically secured with evenly-spaced #8 sheet metal screws:~~
  - ~~3 screws for diameters under 12".~~
  - ~~5 screws for diameters 12" and over.~~

~~-Sealants shall be applied as prescribed in this section.~~

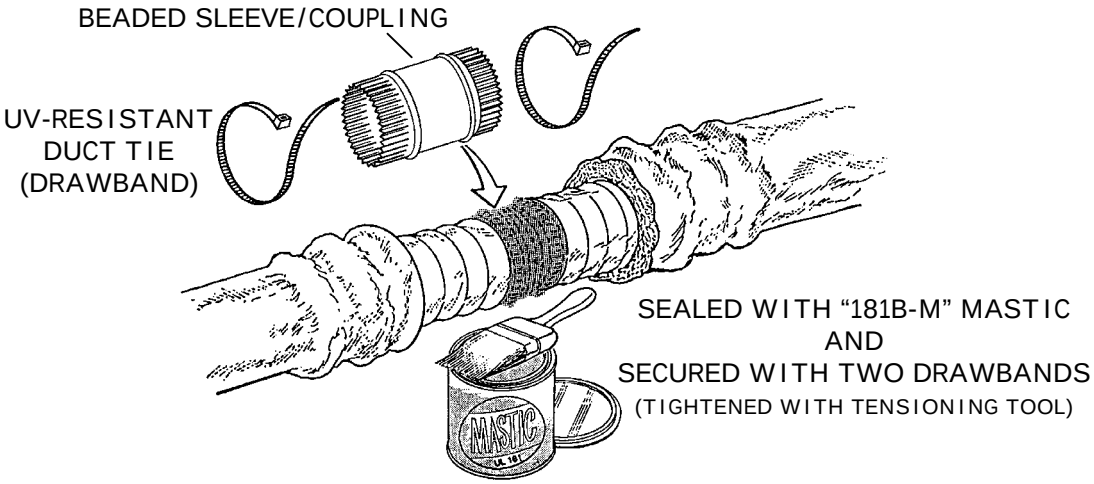

~~55. REPAIR AND SEALING FLEXIBLE DUCTS (continued)~~

~~**-Insulation and Vapor Barrier**~~

~~· Insulation shall completely cover the duct core and fitting.~~

~~· The vapor barrier (jacket) shall be pulled back over the insulation.~~

~~-Where two pieces of duct are joined (splices), the two jackets shall overlap at least 2".~~

~~-Vapor barrier shall be secured/sealed with a drawband and/or three staggered wraps of pressure-sensitive tape.~~

~~**-Core Repairs**~~

~~· Holes/damage in the duct core shall be repaired by removal of the damaged section and insertion of a sleeve/coupling.~~

~~**-Jacket Repairs**~~

~~· Rips and holes in the vapor barrier shall be repaired with pressure-sensitive tape or with mastic and mesh tape.~~

~~· When duct core is air permeable:~~

~~-Ends of the jackets shall be overlapped at least 2" at splices and shall be secured and sealed at all joints with:~~

~~· 181B-FX pressure-sensitive tape, or~~

~~· Drawbands, mastic, and mesh tape.~~

~~-All breaches in the outer vapor barrier shall be similarly sealed.~~

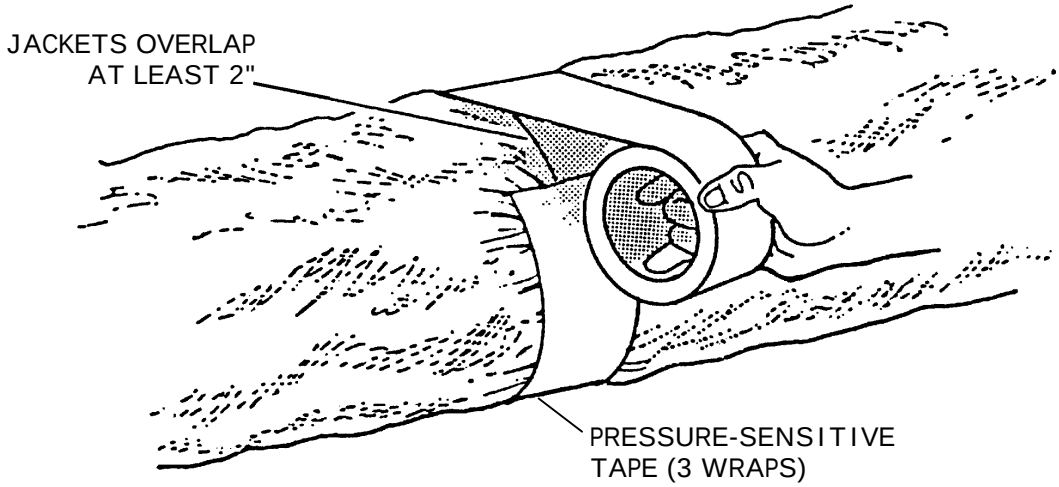

~~57. REPAIRING AND SEALING RIGID METAL DUCTS~~

~~-Rigid Metal Disconnections~~

- ~~Disconnected components shall be rejoined, overlapped when possible, mechanically secured, and sealed with duct tape and/or mastic.~~
- ~~Connections shall be secured with equally-spaced #8 or larger sheet metal screws.~~
  - ~~-Round ducts:~~
    - ~~At least 3 screws for duct diameters up to 12".~~
    - ~~5 screws for diameters over 12".~~
  - ~~-Rectangular ducts: At least 1 screw per side.~~
- ~~When disconnected components cannot be rejoined completely:~~
  - ~~-The gap shall first be mechanically secured (e.g., with metal straps fastened across the gap) and then sealed.~~
  - ~~-Gaps up to 3/8" wide may be sealed with butyl tape and/or duct mastic applied at least 1/8" thick.~~
    - ~~Gaps up to 1/8" may be sealed with butyl tape or mastic.~~
    - ~~Gaps 3/16" to 1/4" may be sealed with butyl tape alone, or with mastic and mesh tape.~~
    - ~~Gaps 5/16" to 3/8" shall be sealed with butyl tape covered by mastic, or with mastic and mesh tape.~~
  - ~~-Gaps 7/16" or wider shall be:~~
    - ~~Repaired with sheet metal that is mechanically secured with screws.~~
    - ~~Sealed with UL listed metallic duct tape or duct mastic.~~

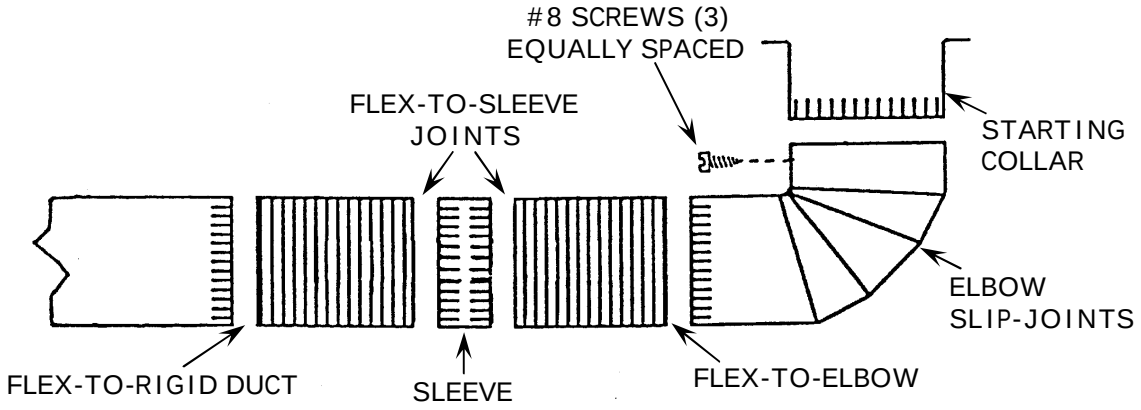

- MASTIC ALONE ON ELBOW SLIP JOINTS & OTHER TAPS UP TO 1/8"
- MASTIC & MESH, OR PRESSURE-SENSITIVE TAPE, ON GAPS OVER 1/8"

~~58. REGISTER BOOT/RISER REPAIR AND SEALING~~

- ~~**Duct boots and risers that are very loose or detached from the floor shall be reattached and mechanically secured (e.g., with screws, staples, or nails).**~~
- ~~**Boot/riser termination shall be then be sealed to the floor.**~~
  - ~~Gaps up to 1/8" wide may be sealed with:~~
    - ~~Elastomeric caulk (e.g., polyurethane or silicone), or~~
    - ~~Duct mastic applied at least 1/8" thick.~~
  - ~~Gaps over 1/8" wide:~~
    - ~~Gaps shall be sealed when possible with butyl tape, or with duct mastic reinforced with mesh tape.~~
    - ~~Elastomeric caulk and metallic tape may be used together where a thinner repair is required.~~
- ~~**Risers that are very loose or disconnected from the trunk shall be re-attached, secured, and sealed (e.g., with butyl tape).**~~

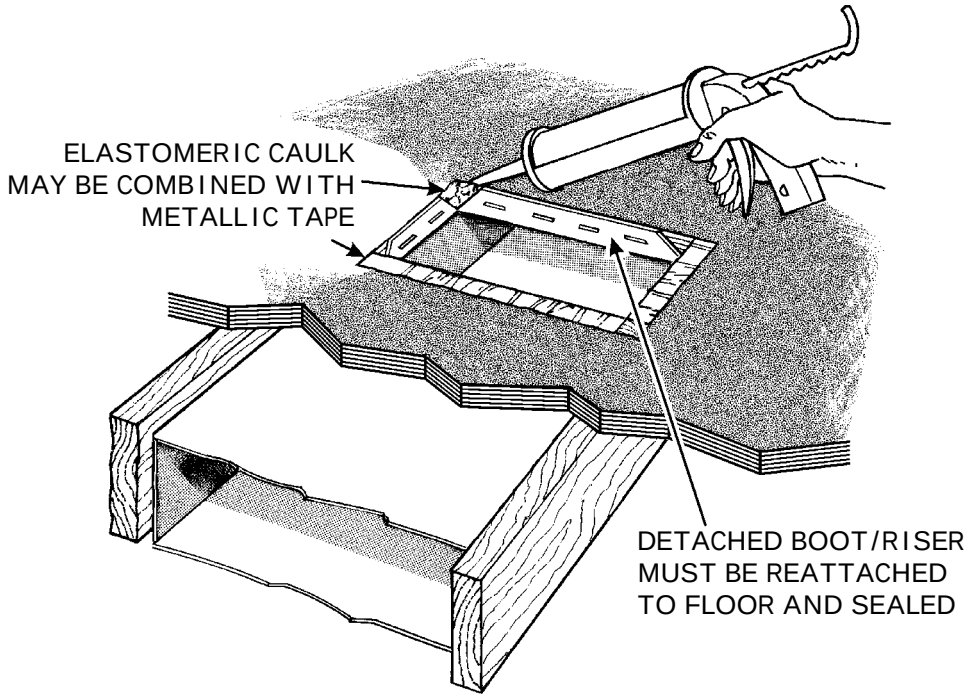

~~59. REPAIRING LEAKY DUCT TERMINATIONS~~

- ~~**A duct termination (dead end) that is open shall be:**~~
  - ~~Repaired and sealed, or~~
  - ~~Securely blocked (e.g., with a sheet metal dam) and permanently sealed.~~
- ~~**Sheet Metal Dams**~~
  - ~~Dams shall be:~~
    - ~~Placed as far from the register opening as feasible.~~
    - ~~Attached securely (mechanically when possible).~~
  - ~~Dams may be attached/sealed with:~~
    - ~~Butyl tape, or~~
    - ~~Mastic and mesh tape.~~

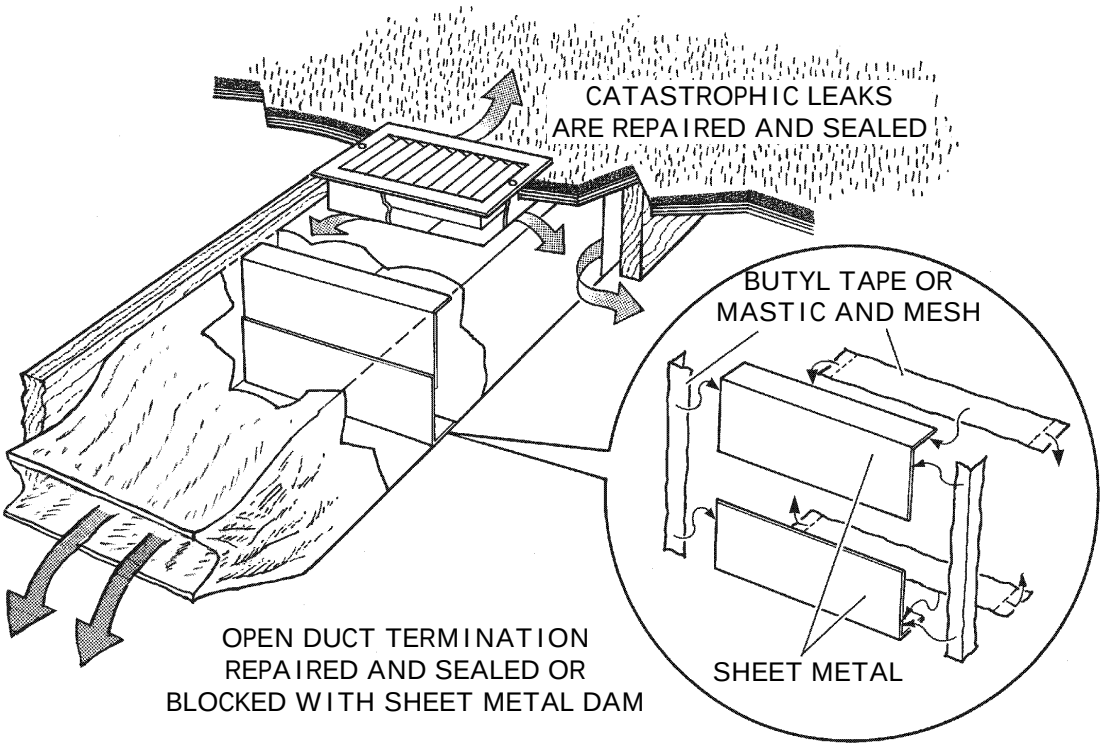

~~60. CROSSOVER DUCTS~~

- ~~Disconnections shall be reconnected, mechanically secured, and sealed.~~
- ~~Other major leaks that are repairable shall be repaired and sealed.~~
- ~~Disconnected and damaged duct components that cannot be feasibly repaired shall be replaced.~~
- ~~Ducts shall be installed, secured, supported, and sealed as prescribed in this section.~~
  - ~~Flexible ducts shall be sealed with UL 181B listed and labeled tapes and mastics.~~
  - ~~All ducts shall be installed above the ground in accordance with Item 52.~~

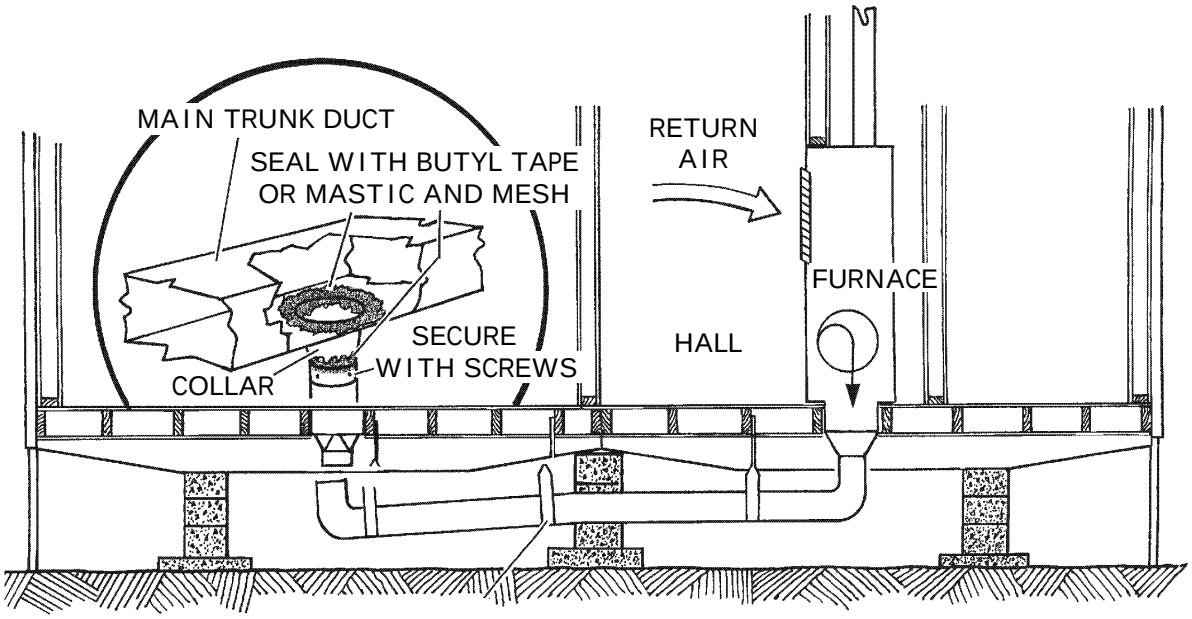

DISCONNECTED/DAMAGED CROSSOVER DUCT REPIRED/REPLACED,
LOOSE CONNECTION TO TRUNK REPAIRED AND SEALED

PART ~~9~~8: POST-INSTALLATION/REPAIR

52. POST-INSTALLATION/REPAIR REQUIREMENTS

- **Appliance Operation**
  - The installed unit shall be tested for proper operation.
  - Proper operation shall be explained and demonstrated to the customer, including:
    - Operation of all user-accessible controls.
    - Filter replacement.
    - Routine maintenance recommended by manufacturer.
  - Manufacturer's written instructions and warranty documents shall be supplied to the customer.
- **Cleanup and Disposal**
  - Paint dust and chips, scraps, and other debris resulting from weatherization activities shall be cleaned up and removed from the premises—utilizing lead-safe practices when applicable.
  - All packing materials and installation debris shall be cleaned up and removed from the premises.
  - All replaced equipment and parts shall be removed from the premises and properly disposed of unless specified otherwise in the home improvement contract.
  - Refrigerant shall be recovered and all hazardous waste materials shall be disposed of in conformance with federal, state and local codes.

INFORMATION ABOUT HANDLING REFRIGERANT AND OTHER HAZARDOUS MATERIALS IS AVAILABLE FROM EPA'S STRATOSPHERIC OONE INFORMATION HOT LINE

9. REPLACEMENT MATERIALS

- **Material Requirement**
  - Windows shall be In conformance with *one or more of the following:*
    - AAMA/NWWDA 101/I.S.2-97*; NWWDA I.S. 2-93, 3-95, or 8-95; or ANSI/AAMA 101-93.*
  - Window unit shall be of a design which is appropriate for mobile home installation.
- **Thermal Performance**
  - Window unit shall have a U-value of 0.75 or lower. *Conformance with Title 24 standards recommended (Table 12-1).*
  - Window shall bear an NFRC thermal performance label *and a permanent label attached to the frame*.
- **Replacement Selection**
  - Flanged windows shall be replaced with flanged windows.
  - Horizontal sliders shall be replaced with horizontal sliders.
  - Vertical sliders shall be replaced with vertical or horizontal sliders.
  - Picture windows (fixed sash) shall be replaced with picture windows or sliders.
  - Jalousies shall be replaced with vertical or horizontal sliders.
- **Insect Screens**
  - All openable windows shall be equipped with insect screens.

TABLE 4-1: TITLE 24 REPLACEMENT WINDOW MINIMUM REQUIREMENTS

EFFICIENCY FACTOR	CLIMATE ZONE	MAXIMUM VALUE
Solar Heat Gain Coefficient (SHGC)	2, 4, & 7 – 15	0.40
	1, 3, 5, 6, 16	No Requirement
U-Factor	16	0.55
	1, 2, 10 – 16	0.57
	3 – 9	0.67

ELECTRIC WATER HEATERS

15. THERMOSTATS AND IDENTIFICATION LABEL

- **Upper and Lower Thermostats *and ID Label***
  - **Locations shall be identified and made easily accessible.**
    - **Blanket shall be cut on sides and bottom to create a top-hinged flap over each thermostat cover plate.**
    - **Flap shall be held closed with tape installed along bottom slit.**
    - **Each flap shall be labeled in permanent ink: "Thermostat" *or "ID Label"*.**
- **Identification Label**

  ~~•The location shall be:~~

  ~~-Marked but not cut.~~

  - **~~Labeled in permanent ink to identify the item: (i.e., Lighting Instructions, Model Number, etc.).~~**

  · ***Flaps shall be held closed with tape.***
  - ***A minimum of one tape strip shall be installed along slit opposite flap hinge.***
  - ***All slits longer than 12" shall be secured with tape installed lengthwise along the slit.***

  · ***Flaps shall be labeled in permanent ink to identify what is underneath.***

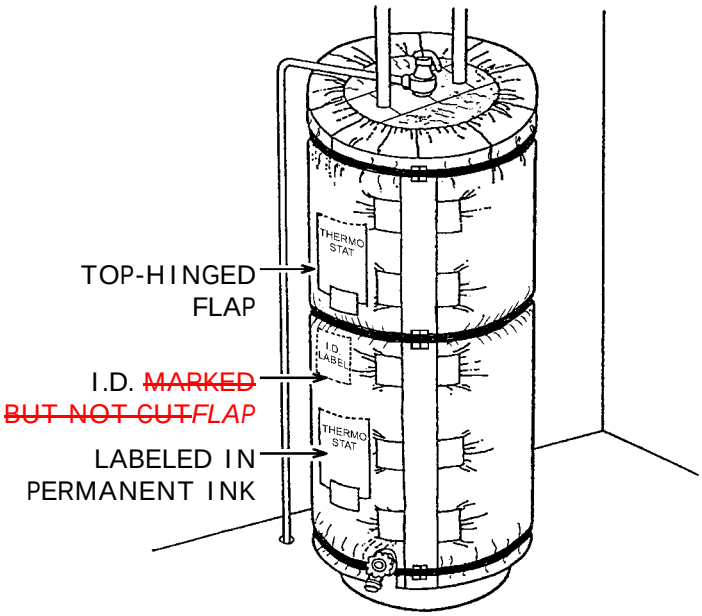

WATER HEATER PIPE INSULATION STANDARDS

1. APPROVED MATERIALS

- **All Materials**
  - Maximum flame-spread index of 25 and maximum smoke-developed index of 50, per ASTM E84, or UL 723, or NFPA 255.
- **Insulation**
  - Preformed foam (e.g. closed cell polyethylene) conforming to ASTM C534.
  - Inside diameter of preformed material shall be appropriate for the size pipe being insulated.
  - Minimum thermal performance rating of 180°F.
- **Tape**
  - Tape specified by insulation manufacturer, or
  - Minimum 2" wide pressure-sensitive metallic tape meeting or exceeding strength and adhesive requirements of UL 181A-P or UL 181B-FX.
  - Cloth duct tape and electrical tape are <u>not</u> allowed.
- ***Ties***
  - *Plastic cable ties.*

PREFORMED FOAM PIPE INSULATION

2. **R-VALUE *OF PIPE INSULATION***
   - **R-4 minimum for pipes less than or equal to 2" in diameter.**
     - *Minimum 1" insulation wall thickness.*
     - *Exception: 3/4" wall thickness acceptable if R-value requirement is met.*

   ~~**-R-6 minimum for pipes greater than 2" in diameter.**~~
   ~~**-1" or greater wall thickness.**~~

3. **SHEET OR SEMI-MOLDED INSULATION**
   - **All Units**
     - Not allowed.

4. **HEAT TAPE OR STRAP INSULATION**
   - **All Units**
     - Not allowed.

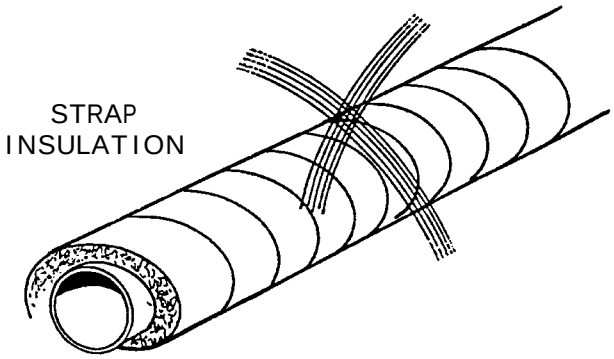

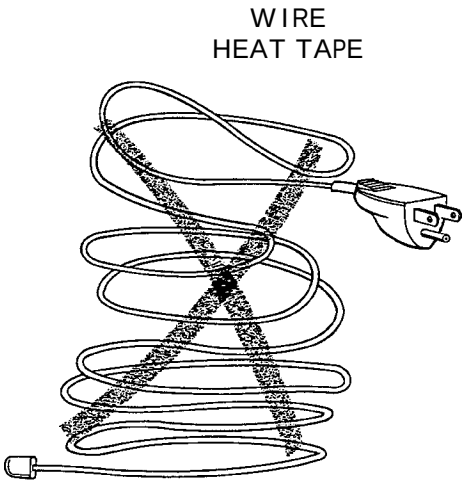

© RHA • 1/1/04 *(Rev. 9/15/05)*

10. GENERAL ATTACHMENT REQUIREMENTS

- **Insulation shall be firmly secured with plastic ties ~~(e.g., UV-resistant cable ties)~~, tape, wire, or sleeves.**
- **All slits and joints shall be glued or taped to achieve complete closure.**
- **All material shall be corrosion-resistant.**
- **Tape shall be used on bends, 90° elbows, and joints.**

11. GLUE FOR ATTACHMENT

- **Glue shall be compatible with insulation and manufacturer's instructions.**

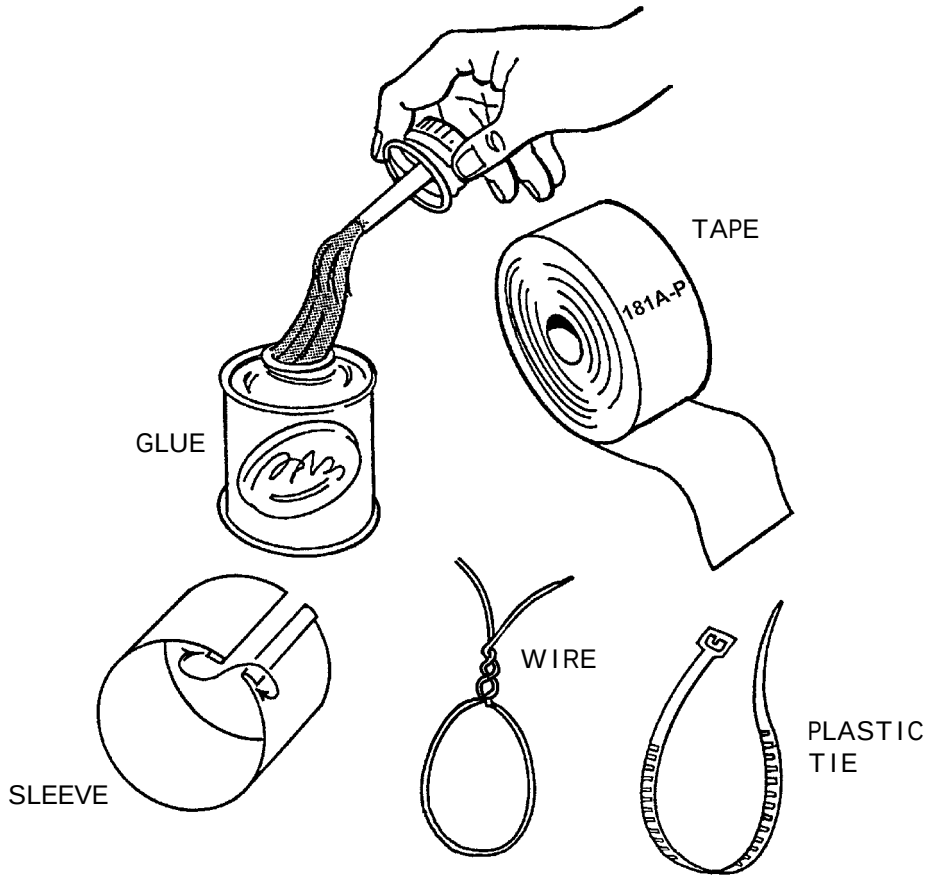

© RHA • 1/1/04 *(Rev. 9/15/05)*

ENERGY-SAVER SHOWERHEAD AND FAUCET AERATOR STANDARDS

1. APPROVED MATERIALS

- **Showerheads and Aerators**
  - Conformance to ~~ANSI/~~ASME A112.18.~~-22031M~~.
  - Compliance with CEC (Title 24) Residential Manual ~~Part 2.6.1~~*Section 5.2.5*.
- **Showerheads**
  - "Self-cleaning" type or cleanable without being unscrewed from the showerarm.
  - Non-aerating type.
  - Ball joint shall be metal (e.g., chrome-plated brass).
  - Ball joint shall be made of the same material as showerarm.
- **Showerarm Adapters**
  - Adapter shall be metal (e.g. chrome-plated brass).
  - Minimum 5/8" long male pipe threads with a minimum taper of 3% on showerhead end.
- **Aerators**
  - Shall be metal (e.g., chrome-plated brass).

2. WARRANTY

- **Showerheads and Aerators**
  - Minimum three-year warranty.

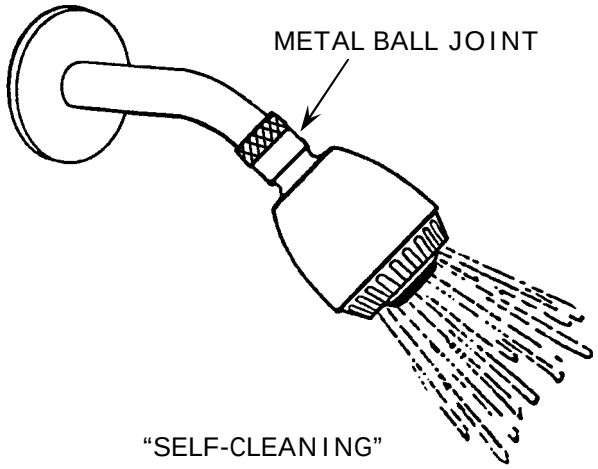

"SELF-CLEANING"
2.5 GPM SHOWERHEAD

3. FLOW RATE

- **Showerheads**
  - Maximum flow rate: 2.50 gpm at 80 psi.
  - Minimum flow rate: 2.0 gpm at 40 psi.
- **Faucet Aerators**
  - Maximum flow rate: ~~2.50~~*2.2* gpm at ~~40~~ *60* psi.

4. SHOWERHEAD FLOW CONTROL

- **Flow-restricting devices shall be factory-installed and mechanically-retained (e.g., with a retaining ring or expansion seat), requiring 8 lbs. or more of pulling force to remove.**
- **Removable flow restrictors are <u>not</u> allowed.**

5. INSTALLATION

- **Functional Showers**
  - Energy-saver showerheads shall be installed on all functional showers that have flow rates greater than 3.0 gpm.
- **Nonfunctional Showers**
  - Energy-saver showerheads shall <u>not</u> be installed on showers which are <u>not</u> functional due to plumbing or physical defects.

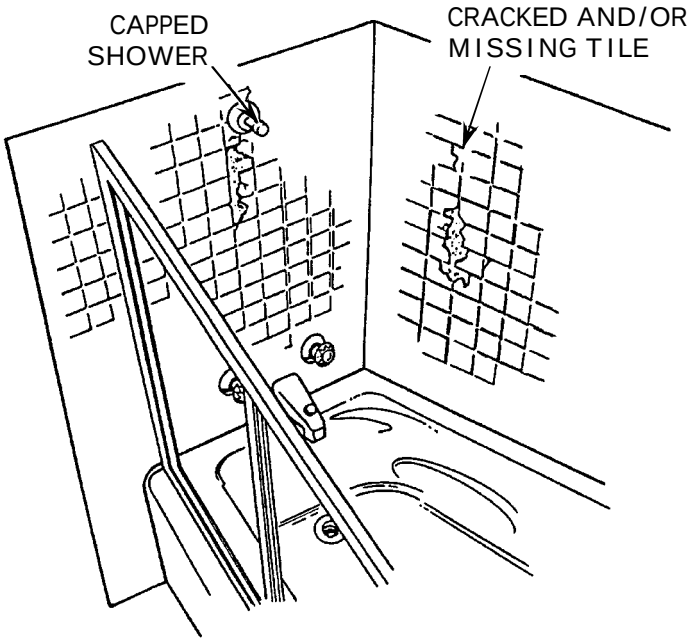

NONFUNCTIONAL SHOWER

SECTION 12

THREAD-BASED COMPACT FLUORESCENT LAMP STANDARDS

1. **MATERIALS**
   - **Compact Fluorescent Lamps (CFLs) must be:**
     - ~~**ENERGY STAR® compliant**~~***ENERGY STAR® qualified*****.**
     - **Warranted for one year from date of purchase.**

2. **INSTALLATION**
   - **All Types**
     - **All lamps, without exception, shall be installed by the contractor.**
     - **Only incandescent and halogen lamps shall be replaced.**
     - **Manufacturer's recommendations shall be followed.**

ALL UNITS MUST MEET OR EXCEED
ENERGY STAR PROGRAM EFFICIENCY STANDARDS

~~**5. TABLE LAMPS**~~

~~**-Shades**~~

- ~~**Harp extensions or expanders shall be installed when needed.**~~
- ~~**The harp shall expand to fit snugly.**~~

~~**5. TABLE LAMPS (continued)**~~

~~**-Height Limitation**~~

- ~~**The height of the lamp shall not exceed 3 times the width of the base.**~~

~~7. CLUSTER LIGHTING~~

~~-All Types~~

- ~~CFLs shall not be installed in chandeliers or other cluster lighting fixtures unless the CFL is specifically designed for such applications.~~

~~8. DIMMERS, PHOTOSENSORS, AND OCCUPANCY SENSORS~~

~~-All Types~~

- ~~Only CFLs rated for use with dimmers, photosensors, and occupancy sensors shall be installed in fixtures controlled by such devices.~~

~~9. TIMERS~~

~~-Mechanical~~

- ~~CFLs may be installed in fixtures equipped with mechanical timers.~~

~~-Solid State~~

- ~~CFLs shall not be installed in fixtures equipped with solid state timers.~~

7. CLUSTER LIGHTING

- ***All Types***
  - ***CFLs shall <u>not</u> be installed in chandeliers or other cluster lighting fixtures unless the CFL is specifically designed for such applications.***
  - ***The fixture shall remain level after installation of the CFL.***

8. DIMMERS, PHOTOSENSORS, AND OCCUPANCY SENSORS

- ***All Types***
  - ***Only CFLs rated for use with dimmers, photosensors, and occupancy sensors shall be installed in fixtures controlled by such devices.***

9. TIMERS

- ***Mechanical***
  - ***CFLs may be installed in fixtures equipped with mechanical timers.***
- ***Solid State***
  - ***CFLs shall <u>not</u> be installed in fixtures equipped with solid state timers.***

10. LAMP CORD SUPPORTED

- **All Types**
  - **CFLs shall <u>not</u> be installed in fixtures supported only by a lamp cord unless the manufacturer allows the use of CFLs in such fixtures.**

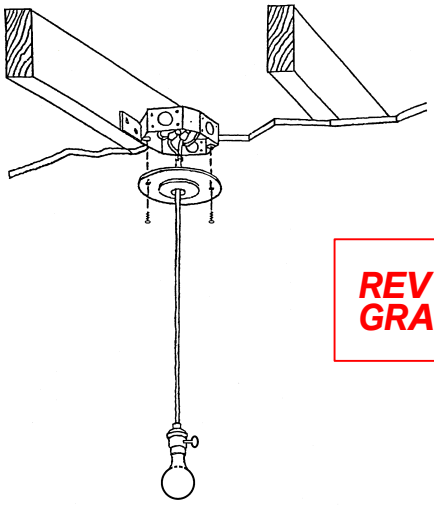

REVISED GRAPHIC

HARD-WIRED COMPACT FLUORESCENT FIXTURE STANDARDS

1. MATERIALS

- **Fixture *ballast* must be UL listed *(UL 935)* ~~and meet ANSI/UL Standard 935~~ Class-P.**
- **CFLs must be ~~ENERGY STAR®~~ ~~compliant~~*ENERGY STAR® qualified*.**
- **Compact fluorescent lamp (CFL) tube glass and other housing materials must be UV resistant and heat stable.**
- **Hardwired fixtures and lamps must be fully warranted for one year from date of purchase.**
- **Fixture must allow for lamp replacement.**

2. INSTALLATION

- **All fixtures shall be installed:**
  - In accordance with the current NEC and local codes.
  - In a manner which prevents water from entering or accumulating in wiring compartment, lamp holder or electrical parts.
- **All wiring, conduit, accessories, fasteners, and controls used in exterior locations shall be designed for exterior use.**

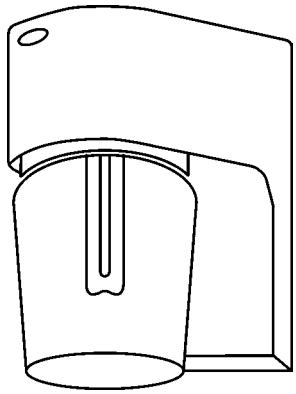

WALL-MOUNT
FLUORESCENT FIXTURE
WITH PHOTO CELL CONTROL

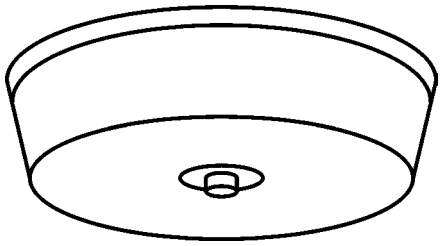

CEILING-MOUNT
COMPACT FLUORESCENT
REPLACEMENT FIXTURE

12. COOLER SUPPORTS (continued)

- **Platform Supports**
  - **Platform shall:**
    Be braced and stable.
    Rest on concrete pad or masonry supports.
  - **Materials for wooden platforms shall be:**
    Exterior grade.
    Sealed with exterior primer and paint.
    Separated from the earth (e.g., by concrete).

13. ATTACHMENTS

- **Units shall be attached with noncorrosive screws or lag bolts.**
  - **Nails and molly bolts <u>not</u> allowed.**
  - ***Anchors shall penetrate framing members a minimum of 3/4" (1" if self-drilling screws).***

~~-Anchors shall penetrate framing members a minimum of 3/4".~~

- **Attachment shall comply with manufacturer's minimum specifications, however:**
  - **Noncorrosive screws or lag bolts shall be used.**
  - **Nails and molly bolts are <u>not</u> allowed.**
- **~~Anchors shall penetrate framing members a minimum of 3/4" (1" if self-drilling screws).~~**

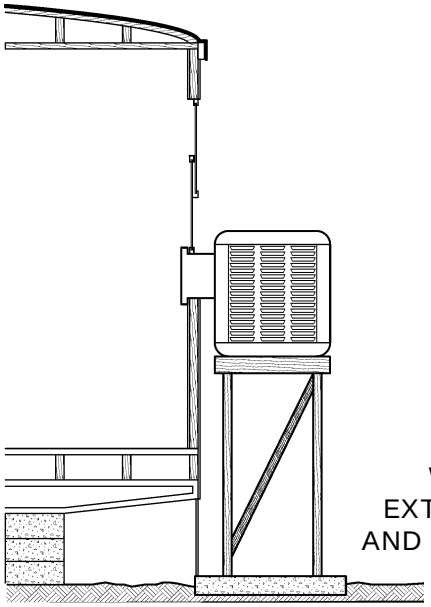

WOODEN PLATFORM
EXTERIOR GRADE, SEALED,
AND SEPARATED FROM EARTH

21. PRE-OPERATION CHECK (continued)

- **Water system shall be checked for:**
  - **Proper flow and no leaks.**
  - **Proper float and splash shield adjustment.**
  - **Even water distribution over pads.**
- **Pump and screen shall be checked for:**
  - **Properly installed screen.**
  - **Debris-free inlet with proper clearance from obstructions.**
  - **Proper pump impeller operation (turns freely).**
- **Blower fan shall be checked to assure:**
  - **Proper clearance from housing.**
  - **Free rotation.**
  - **Proper operation of both motor and fan.**
- **Drain line shall be checked to determine that it:**
  - **Is properly installed and free of leaks.**
  - **Terminates correctly.**
- **Other procedures recommended by manufacturer shall be followed.**

SAMPLE PRE-OPERATION CHECKLIST

	✓	ITEMS TO BE VERIFIED (CHECK OFF EACH AS IT IS COMPLETED)
1.	❑	Installation requirements
2.	❑	Electrical circuitry
3.	❑	Blower and motor
4.	❑	Water system
5.	❑	Pump and screen
6.	❑	Drain line
7.	❑	Other…

SECTION 15

REPLACEMENT REFRIGERATOR STANDARDS

1. REPLACEMENT REFRIGERATOR

- **All units shall be:**
  - **UL listed.**
  - **~~ENERGY STAR® labeled~~*ENERGY STAR® qualified*.**
  - **Frost free.**
- **19 cubic foot capacity maximum. (Exception: Two refrigerators and/or freezers exchanged for a single unit may be replaced with a unit no larger than 23 cu ft.)**

2. WARRANTY

- **All Units**
  - **Shall have a minimum 1 year warranty parts and labor.**

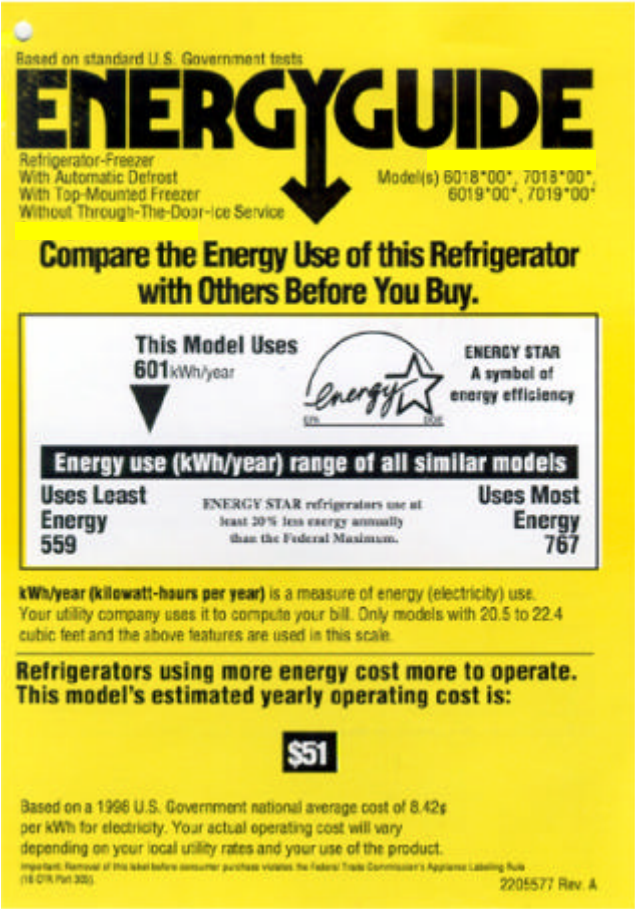

ENERGY GUIDE LABEL
WITH
ENERGY STAR® LOGO

6. ELECTRICAL REQUIREMENTS

- **Electrical Circuit**
  - **Overcurrent protection and size of conductors shall be in conformance with manufacturer's specifications and local code.**
  - **A GFCI-protected circuit or receptacle shall not be used.**
- **Electrical Outlet**
  - **Refrigerator shall be plugged into its own individual electrical outlet (not shared with another appliance).**
  - **The receptacle and cover plate shall be in good condition.**
  - **The receptacle shall be properly grounded in conformance with the California Electrical Code (CEC) and local code.**
- **Extension Cord**
  - **~~One~~ *An* extension cord may be used when allowed by manufacturer's instructions *and with prior approval of Program Manager*.**
  - **Extension cord shall be:**
  - **UL listed, 3-conductor cord, with 3-prong plug and receptacle.**
  - **Minimum 14 AWG.**
  - **Maximum 6' in length.**
- **Appliance cord and extension cord shall not be located where either can create a walking hazard (where people can trip).**

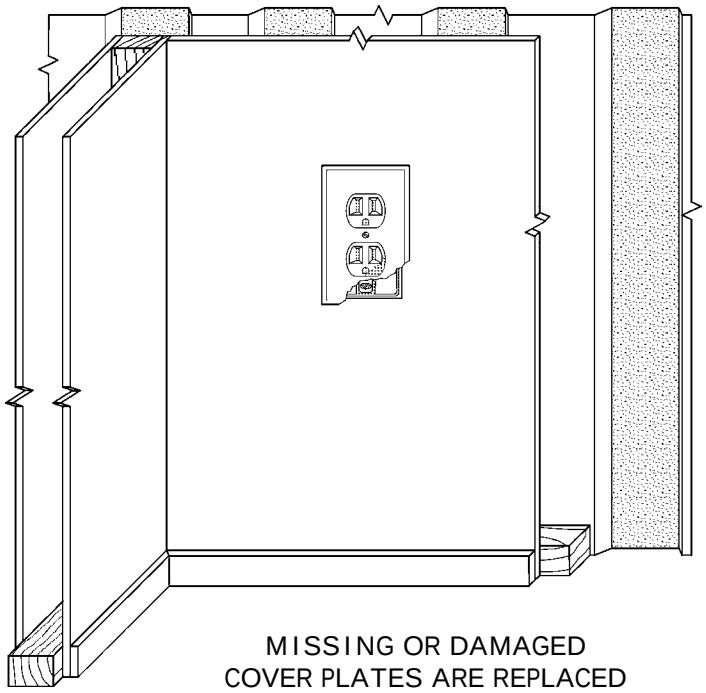

MISSING OR DAMAGED
COVER PLATES ARE REPLACED

SECTION 19

WALL AND WINDOW AIR CONDITIONER STANDARDS

1. MATERIALS

- **All Units**
  - **Unit shall be UL listed and equipped with:**
    - **Minimum two-speed fan.**
    - **Adjustable thermostat with a minimum of six positions.**
    - **Removable, washable foam filler.**
    - **Air directional control, minimum four-way.**
  - **Must be ~~ENERGY STAR® labeled~~ *ENERGY STAR® qualified*.**
  - **Must have a minimum EER rating of 10.7.**
- **Wall Units**
  Must be equipped with thru-the-wall chassis (sleeve).

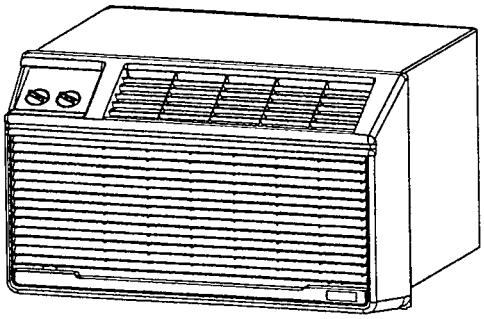

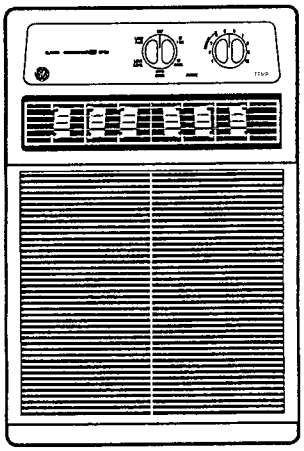

~~9.~~*10.* EGRESS WINDOWS (continued)

- **Air conditioner shall not be installed in egress windows <u>unless</u>:**
  - **Allowed by customer, and**
  - **One of the following is present in the same room:**
    - **Another operable window which meets egress requirements, <u>or</u>**
    - **An operable exterior door which meets egress requirements.**

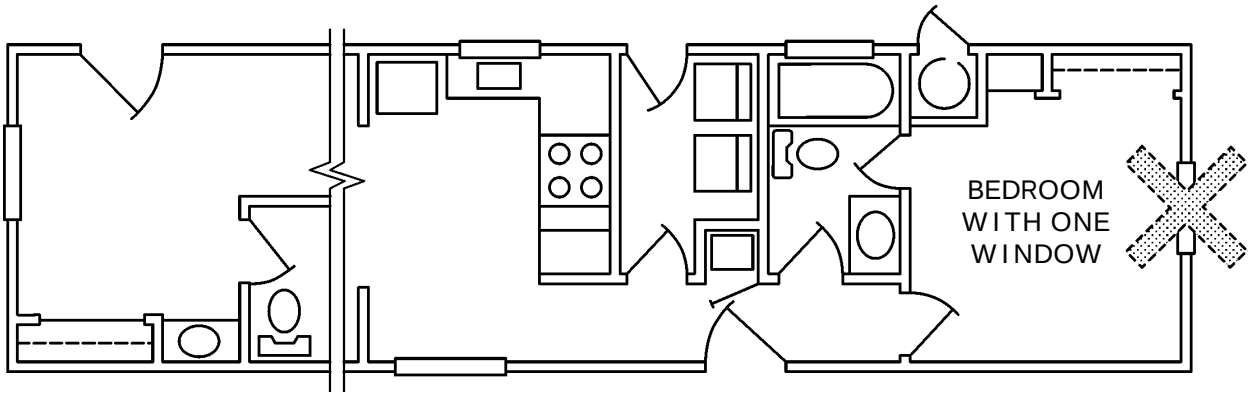

12. LOCATION

- **Window-Mount Units**
  - **All Windows**
    - **Air conditioner shall be placed in center of window opening.**
    - **Permanent window panels shall be installed to completely fill empty spaces over 12" wide.**
    - **Side window panels over 12" wide shall be transparent.**
    - **Window panels shall be sealed in place.**
    - **Unit shall be placed on north or east side of home out of direct sun when possible.**
    - **Place unit in the shade of trees and shrubs *when feasible*.**
  - **Double-Hung Windows**
    - **Air conditioner shall be installed in lower sash opening.**
    - **Lower sash shall seal against unit and side panels.**

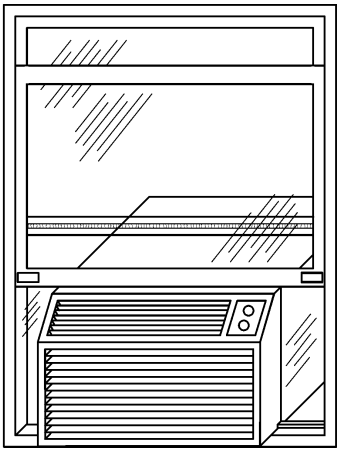

AIR CONDITIONER CENTERED
IN WINDOW OPENING

NATURAL GAS WATER HEATER REPLACEMENT STANDARDS

1. MATERIALS

- **Water Heaters**
  - Natural gas-fueled storage *or instantaneous (tankless)* type.
  - Minimum Energy Factor (EF) ~~of 0.60, and~~*shall be in* compliance with Title 24 energy efficiency requirements*, per Table 25-1*.
  - Listed and labeled in conformance with HCD regulations.
  - Manufactured to ANSI Z21.10.1 or ANSI Z21.10.3.
- **Vent Systems**
  - UL listed vent connectors, components, and Type B vent pipes.
  - Nonmetallic systems shall conform to ASTM D 1785 and D 2665.
- **Gas Piping and Valves**
  - Gas valves shall be listed (e.g., by UL) and AGA or CSA certified.
  - Flexible connectors shall be listed (e.g., by IAPMO) epoxy-coated or stainless steel units.
  - Fuel-gas gas piping shall comply with ~~1998~~ *2001* CMC Chapter 13.
  - Copper gas lines and butt-soldered joints <u>not</u> allowed.

2. WARRANTY

- **Minimum five (5) year written manufacturer's warranty.**
- **Minimum one (1) year written labor and parts warranty.**

TABLE 25-1: MINIMUM ENERGY FACTOR

WATER HEATER TYPE	VOLUME (GALLONS)	MINIMUM EF
Gas Storage	30	0.61
	40	0.59
	50	0.58
Gas Instantaneous	—	0.62

© RHA • 1/1/04 *(Rev. 9/15/05)*

3. GENERAL REQUIREMENTS

- **A permit for the installation shall be obtained from and finalized by HCD.**
- **Installation shall be in conformance with:**
  - Product listing.
  - Manufacturer's instructions and specifications.
  - The California Mechanical Code (CMC), California Plumbing Code (CPC), or as specified by HCD.
- **Orifice shall be verified to be sized for natural gas.**

4. WATER HEATER SIZING

- **Replacement water heater capacity, the First Hour Rating, shall comply with the greater of:**
  - Manufacturer's sizing recommendations, or
  - HCD requirements, and
  - S*torage units s*hall be no less than the 2000 Uniform Plumbing Code (UPC) minimum guidelines, as shown in the table below.

5. LOCATION

- **Clearances shall be in compliance with listing requirements, manufacturer's instructions, and HCD regulations.**
- **Location shall be structurally sized/constructed to safely support the weight of the tank.**

MINIMUM CAPACITY FOR WATER HEATERS
FIRST HOUR RATING TABLE
BASED ON THE
2000 UNIFORM PLUMBING CODE (UPC) TABLE 5-1

Number of Bathrooms	1 to 1.5			2 to 2.5				3 to 3.5			
Number of Bedrooms	1	2	3	2	3	4	5	3	4	5	6
First Hour Rating*	42	54	54	54	67	67	80	67	80	80	80

***First Hour Rating, the water heating capacity expressed in gallons, is the amount of hot water the heater can supply per hour (starting with a tank full of hot water). The First Hour Rating is shown on the yellow EnergyGuide label.**

© RHA • 1/1/04 *(Rev. 9/15/05)*

SECTION 1 PREFACE

FOR

NATURAL GAS APPLIANCE TESTING (NGAT)

1. INSTALLATION POLICIES

1.1. Combustion appliance testing will be conducted *only* for ~~all~~ homes that receive infiltration reduction measures and that have at least one natural gas appliance affecting the living space. (Appliances affecting the living space are those identified as such in this section of this WIS manual.)

1.2. Homes with non-IOU (e.g., propane) space heating fuel*:*

1.2.1. Homes with non-IOU (e.g., propane) space heating fuel are not eligible for combustion natural gas appliance testing nor infiltration reduction measures. The IOU will refer these homes to local LIHEAP agencies to conduct testing and do any repairs or replacement of non-IOU combustion fuel appliances and charge such services to the LIHEAP agencies' CSD-funded weatherization programs. Whether the LIHEAP agencies would also install infiltration reduction measures, or any other weatherization measures under their LIHEAP programs, would be subject to voluntary agreements freely entered into by the IOUs and the local LIHEAP agencies.

1.2.2. Any agreement between an IOU and a local LIHEAP agency which does not contract with that IOU to provide weatherization services under the IOU's LIEE program will be voluntarily negotiated on a case-by-case basis, given different geographic areas served, and different situations which might occur in different parts of each IOU's service area.

1.2.3. In any part of a given IOU service area where the local LIHEAP agency chooses NOT to enter into such an agreement, the IOU will continue to install all feasible non-infiltration weatherization measures under its LIEE program, then refer the customers to the local LIHEAP agency if they want to have their non-IOU fuel combustion appliances tested, repaired or replaced, and/or want to have infiltration reduction measures installed in their home by the LIHEAP agency.

~~1.3.Effective For Program Year 2005, pending further CPUC action, homes with IOU space heating but with other appliances using non-IOU fuel will be treated in accordance with the following utility-specific policies:~~

~~- In the SDG&E and SoCalGas programs, these homes will not be subjected to combustion appliance testing of non-IOU fueled appliances. Instead, they will be assessed using the PY2003 Minimum Standard adopted by~~

~~the Commission in D. 101-12-020, which does not involve testing of appliances other than space heating.~~

~~- In the SCE program (for which electric space heating is present), combustion appliance testing will not be conducted.~~

~~- In the PG&E Program, these homes will be subjected to combustion appliance testing on all combustion appliances prior to weatherization (and, for a sample of homes, after weatherization). For homes failing that, infiltration-reduction measures will be deemed non-feasible~~

1.3. In order to avoid cases in which post-weatherization NGAT protocol would discover nonconforming conditions that: (a) preclude installation of infiltration reduction measures, and (b) cannot be corrected within the scope of the program, some pre-weatherization evaluations of gas appliances are performed as part of the initial home assessment. Pre-weatherization appliance evaluations include the following components:

- *Gas Leaks. Each gas-burning appliance is checked for the presence of gas leaks. When a natural-gas leak is found, the utility is contacted for gas service repairs. Non-IOU gas leaks are treated in accordance with utility-specific policies. All gas leaks must be repaired before weatherization commences.*
- *Combustion and Ventilation Air (CVA) Evaluations. CVA is evaluated for furnaces and water heaters to determine if it is adequate and, if inadequate, whether correction is feasible*/possible.
- *Flue and Vent Pipe Termination Evaluations. Flue and vent pipe terminations are checked to determine if any violate NGAT criteria and, if nonconforming, whether correction is feasible.*
- *Appliance Operation and Accessibility. All gas-burning appliances are checked to determine whether: (a) they are accessible for testing, and (b) they are operable. Non-operable natural gas appliances are referred to the appropriate utility service department. Non-operable propane appliances are treated in accordance with utility-specific policies.*
- *Unvented Space Heater. The dwelling is checked for presence of an unvented combustion appliance used for heating the living space (which will preclude installation of infiltration reduction measures if not removed/elimiated).*
- *Gas Clothes Dryer. If located within the living space, the clothes dryer moisture exhaust is checked to determine if it is properly vented outdoors. If not properly vented outdoors, infiltration reduction measures will not be installed. This restriction does not apply to a gas clothes dryer located in an attached garage*.
- *Gas Cooking Area Ventilation.: Check to determine if gas cooking is present and the kitchen exhaust to outdoors is nonconforming*

- *Open Combustion Space/Water Heater Indoors. Check to determine if an open combustion space or water heater is present within the living space.*
- *Isolation of Return Air. Check to determine if an exterior-accessed appliance enclosure has unacceptable isolation of furnace return air.*

Required corrections will be performed before weatherization commences. The owner will be informed of conditions that preclude installation of infiltration reduction measures and cannot be remedied by the LIEE program (e.g., exhausting clothes dryers outdoors, and repair or *replacement of appliances and gas vents for which* ~~R&R~~ *repair or replacement is not available).*

*1.4. After completion of weatherization that includes infiltration reduction measures, NGAT is performed for all natural gas appliances affecting the living space. Testing of appliances using non-IOU fuels is conducted in accordance with utility-specific policies (see 1.*5 *and 1.*9*). Post-weatherization NGAT includes the following components:*

~~1.4.In each home containing at least one combustion appliance affecting the living space, the following combustion appliance protocols will be conducted:~~

- Visual Examinations, including flue and vent system checks, ~~as well as~~ appliance component checks, *re-check for gas leaks, inoperable or inaccessible appliances, nonconforming appliances; and check for properly-blocked fireplace damper if gas log is used as the primary heat source.*~~.~~
- Combustion *and Ventilation* Air *(CVA)* ~~Evaluation~~ *Verification*.
- *Ambient* Carbon Monoxide Tests, as prescribed below in 1.6.
- Draft Tests, using smoke, on appliances for which draft tests are applicable *(e.g., open combustion natural draft space- and water-heating appliances)*.

1.5. *For IOU-fueled natural gas appliances, ambient* CO Testing will be conducted using the following protocol~~s~~:

- *Space* Heating Appliances: ~~Room~~ *Appliance* ambient CO testing is performed *for all space heating appliances*.
- Water Heaters: ~~Room~~ *Appliance* ambient CO testing is performed ~~when unit is in the home's envelope or in a closet abutting conditioned space. When water heater is in a closet abutting conditioned space, room ambient CO test is performed at the draft hood~~ *if the water heater is in a location affecting the living space*.
- ~~Kitchen~~ *Cooking* Appliances: Room ambient CO tests are performed in the kitchen ~~while kitchen appliances are operating~~ *separately during operation of each cooking appliance component (cook top, oven, and broiler)*.

- Gas Logs: Exhaust~~/flue~~ *gas* CO test is performed inside the top edge of the fireplace opening.
- Clothes Dryers: No CO tests are performed~~; however, visual inspection is conducted to ensure that the dryer is exhausted outdoors~~.

1.6. If a problem is identified through application of the overall NGAT protocol, *(i.e., elevated CO, inadequate draft, or defect causing an unsafe condition),* the case will be referred *for resolution* to qualified utility-trained personnel ~~for resolution~~*or a contractor licensed to repair appliances*. Such resolution may involve the use of flue CO testing as well as other procedures.

1.7. Timing of combustion appliance testing will be as follows:

1.7.1. Homes with Natural Gas Appliances

For homes other than those using non-IOU combustion fuels with natural gas appliances, combustion appliance testing post-weatherization NGAT protocols is are conducted after weatherization. Post-weatherization NGAT shall be conducted within five (5) working days from the date that infiltration reduction measures are installed.

1.7.2. Homes with Non-IOU Combustion Appliances

Timing of combustion appliance testing will temporarily differ across utilities for homes using non-IOU combustion fuels. For SDG&E, So-Cal Gas and SCE, no tests will be conducted on appliances using non-IOU fuels. For PG&E, tests for homes with non-IOU combustion appliances will be conducted prior to weatherization and, in a sample of homes, after weatherization.

1.7.3. Homes for which Infiltration Reduction is Simulated

Temporary sealing/blocking of defective windows and doors, in order to perform post-weatherization NGAT, is allowed when required materials (such as specialty glass or special-order windows or doors) are not available to be installed concurrently with the other weatherization measures. NGAT will be conducted with the defect sealed/blocked (e.g., with plastic sheeting) to simulate infiltration reduction achieved by the completed window/door repair/replacement. A repeat of NGAT following the completed repair/replacement is not required.

~~Post-weatherization NGAT protocol shall be conducted the same day as infiltration reduction measures are installed.~~

~~1.8.Homes normally receiving post-weatherization testing:~~

~~(a) Evaluation of the following will be conducted prior to installing weatherization measures (e.g., during initial home assessment) to determine that any required corrections are feasible:~~

~~— Existence of gas leak(s)~~

~~— Adequacy of combustion air venting~~

~~– Adequate clearance between water heater vent termination and evaporative cooler inlet.~~

~~(b) Required corrections will be performed before weatherization work commences.~~

1.8. The following actions will be taken when appliances are found ~~to have problems~~*fail NGAT*:

- In owner-occupied homes, natural gas space heaters *and water heaters* failing one or more of the tests covered by the ~~new~~ *NGAT* protocol will *be provided with Service/Adjustment and, if necessary, will* be repaired or replaced.

~~– In owner-occupied homes, natural gas water heaters failing one or more of the tests will be repaired or replaced.~~

- In owner-occupied homes, non-program appliances failing one or more of the tests covered under the ~~new~~ *NGAT* protocol*s* will be ~~serviced~~*provided with Service/Adjustment*. If ~~these repairs do~~*Service/Adjustment does* not correct the problem, the appliances in question will be *tagged* ,*shut off*, ~~capped~~*,* and*/or capped and* reported to the owner.
- In renter-occupied homes, appliances failing one or more of the tests covered by the ~~new~~ NGAT protocol*s* will be ~~serviced~~ *provided with Service/Adjustment*. If *Service/Adjustment* ~~servicing an appliance~~ does not correct the problem, the appliance be will be tagged, shut off, *and/or* capped*,* and reported to the tenant and the landlord.

SECTION 3 PREFACE

FOR

DOOR WEATHERSTRIPPING

1. INSTALLATION POLICIES

~~1.1.Existing weatherstripping that is functional and operating properly shall not be replaced even if it is not an approved material.~~

~~*1.2.*~~*1.1.* The contractor may adjust existing weatherstripping in lieu of replacement only if existing weatherstripping is functional and creates a proper seal.

~~*1.3.*~~*1.2.* Door shoe and threshold combinations must be installed unless proven to be nonfeasible.

~~*1.4.*~~*1.3.* A threshold should not be installed ~~if it~~*which* exceeds 1" in height from the finished floor (1/2" in height for handicapped).

~~*1.5.*~~*1.4.* When the installation of a door shoe and threshold combination is not feasible for the following reasons, an automatic sweep may be used:

- Medical reasons, such as wheelchairs or walkers, require that the floor be as flat as possible.
- Metal doors cannot be cut to accommodate a shoe.
- Doors open outward and do not overlap a floor surface when closed. “Bumper” type thresholds may be used in this circumstance if a tripping hazard will not be created and they do not exceed height requirements.
- The installation of a proper threshold requires carpet cutting.
- The door is unusually expensive and might be aesthetically damaged by cutting.

~~*1.6.*~~*1.5.* A stationary sweep can be used in lieu of an automatic sweep if a door shoe and threshold combination is not feasible and an automatic sweep cannot be installed. The use of flip up sweeps is not allowed.

SECTION 11 PREFACE
FOR
DUCT TESTING

1. INSTALLATION POLICIES FOR DUCT TESTING AND SEALING AS A FREE-STANDING MEASURE

1.1. Duct testing and sealing as a measure will be offered only in Single Family and Mobile Homes,

1.2. Duct testing and sealing as a measure will be offered in all Climate Zones for Homes with Natural Gas Space Heating provided by the IOU,

1.3. For homes with electric space heat provided by the IOU, duct testing and sealing as a measure will be offered only in Climate Zones 10-16,

1.4. In order to be considered as a Program measure, the potential for duct leakage reduction must be at least 13% of total fan flow (airflow).

1.5. For a duct system to be considered sealed, (a) the duct leakage reduction must equal or exceed 13% of airflow; (b) the final duct leakage must be reduced to less than 15% of airflow, or, if this cannot be reached, (c) all accessible duct leaks must be sealed as verified by smoke tests.

1.6. Duct sealing is <u>not</u> required unless initial leakage is at least 28% of airflow.

1.7. The utility or its designee will verify initial and final duct leakage rates, in accordance with the procedures in WIS Section 10, Duct Testing Standards, and Appendix D, Methods for Estimating and Measuring Airflow.

SECTION 13 PREFACE

FOR

HARD-WIRED COMPACT FLUORESCENT FIXTURES

1. INSTALLATION POLICIES

1.1. This measure is limited to ~~the installation of hard-wired compact fluorescent porch light fixtures~~*single family non-mobile homes*.

~~1.2. Hard-wired compact fluorescent porch light fixtures may be installed only in single family residences.~~

~~1.3. No more than an average of three fixtures may be installed.~~

~~1.4. Replaced porch light fixtures may be left with the customer or the property manager only if requested.~~

SECTION 15 PREFACE

FOR

REFRIGERATOR REPLACEMENT

1. INSTALLATION POLICIES

1.1. The minimum size for primary refrigerators replaced under the LIEE Program is 10 cubic feet.

1.2. Refrigerators may ~~not~~ be replaced ~~unless~~ *only if* the existing refrigerator ~~is more than 10 years old~~*was manufactured before 1993*.

1.3. One of the refrigerators replaced under the Program must be a primary refrigerator. The primary refrigerator is the main refrigerator in the home, usually the kitchen refrigerator.

1.4. The size of the replacement refrigerator shall be approximately equal to the size of the existing unit, not to exceed 19 cubic feet. However, when two refrigerators and/or freezers are exchanged for a single unit, the replacement unit may <u>not</u> be larger than the combined size of the two existing units, ~~provided that the new unit is no~~*and may not be* larger than 23 cubic feet.

1.5. Space must be physically large enough to accommodate the new refrigerator, with entrance and passageways sufficient to allow removal of the existing refrigerator.

1.6. Contractor shall dispose and recycle (de-manufacture) replaced refrigerators in an environmentally safe manner and in accordance with federal, state, and local regulations and codes. Contractor represents that it has knowledge of the Metal Discard Act, effective January 1, 1994, which prohibits disposal of refrigerators/freezers in landfills.

SECTION 16 PREFACE

FOR

NATURAL GAS CENTRAL FORCED AIR HEATING SYSTEMS REPAIR AND REPLACEMENT

1. FURNACE REPAIR/REPLACEMENT ~~INSTALLATION~~ POLICIES

1.1. Furnace repair or replacement may be provided only when the appliance ~~is non-operational or~~ fails NGAT, and correction cannot be achieved with Service/Adjustment by utility gas service personnel (or their designated representative).

1.2. A central furnace may be replaced only if the cost of repairing the unit would be more than 50% of the cost of replacement.

~~1.1.~~*1.3.* Furnace replacements and major furnace repairs may be provided only if the residence is owner-occupied. *Service/*Adjustment ~~and minor repairs~~ may also be conducted in ~~non-owner~~*renter*-occupied homes.

~~1.2.~~*1.4.* Furnace repairs and replacements will be provided only if the fuel used by the furnace is supplied by the utility providing LIEE Program services.

~~1.3.~~*1.5.* Furnace replacement will not include hazardous material abatement, major structural alteration, concrete work, painting, or floor covering.

~~1.4.~~*1.6.* An air conditioning unit may be replaced in conjunction with a furnace replacement if:

- The unit being replaced is a combined forced air heating and central AC package system, also referred to as a dual-pack (i.e., the AC and furnace is manufactured as one unit and is housed in a single sheet metal housing); or
- The furnace being replaced is part of a split forced air heating and AC system and the AC evaporative coil and/or the outside system cannot be matched with the new furnace.

~~1.5.~~*1.7.* Replaced units must be de-manufactured in compliance with all laws and regulations.

~~1.6.~~*1.8.* Installer must have C-20 HVAC license.

1.9. A furnace that is <u>not</u> abandoned or inaccessible and cannot be made operable through Servicing fails NGAT.

2. PROGRAMMABLE THERMOSTAT INSTALLATION POLICIES

2.1. Programmable thermostat~~s are~~ *may be* installed only ~~in conjunction with~~*if a* ~~central~~ furnace *or central air conditioner is* ~~repair/~~replace*d.*~~,nt~~ ~~and only when required by state or local code as part of furnace repair/replacement.~~

2.2. Before installing a programmable thermostat, Contractor shall explain ~~their~~ *its* operation and provide the customer an opportunity to refuse the measure.

3. CENTRAL SYSTEM ~~AIR~~ *HVAC* FILTER INSTALLATION POLICIES

3.1. *HVAC* filters ~~are installed~~ *may be replaced* only ~~in conjunction~~ *as part of* ~~with~~ central ~~forced air heating system~~*furnace* repair *or central air conditioner replacement*.

3.2. Contractors must show customers how to remove, clean, and re-install the filters.

SECTION 17 PREFACE
FOR
DUCT SEALING

1. INSTALLATION POLICIES FOR DUCT TESTING AND SEALING AS A FREE-STANDING MEASURE[1]

1.1. Duct testing and sealing as a measure will be offered only in Single Family and Mobile Homes.

1.2. Duct testing and sealing as a measure will be offered in all Climate Zones for Homes with Natural Gas Space Heating provided by the IOU.

1.3. For homes with electric space heat provided by the IOU, duct testing and sealing as a measure will be offered only in Climate Zones 10-16.

1.4. In order to be considered as a Program measure, the potential for duct leakage reduction must be at least 13% of total fan flow (airflow).

1.5. For a duct system to be considered sealed, (a) the duct leakage reduction must equal or exceed 13% of airflow; (b) the final duct leakage must be reduced to less than 15% of airflow, or, if this cannot be reached, (c) all accessible duct leaks must be sealed as verified by smoke tests.

1.6. Duct sealing is <u>not</u> required unless initial leakage is at least 28% of airflow.

1.7. The utility or its designee will verify initial and final duct leakage rates, in accordance with the procedures in WIS Section 11, Duct Testing Standards, and Appendix B, Methods for Estimating and Measuring Airflow.

[1] *Although Duct Testing and Sealing is a single measure, there are separate WIS sections for Duct Testing (Sec. 11) and Duct Sealing (Sec. 17). The Preface Pages are identical in both WIS Sections (11 and 17).*

SECTION 18 PREFACE
FOR
CENTRAL AIR CONDITIONER REPLACEMENT

1. CENTRAL AIR CONDITIONER REPLACEMENT POLICIES

1.1. Central air conditioner replacements will be offered only in Title 24 climate zones 14 and 15.

1.2. A programmable/setback thermostat may be installed only if a central air conditioner is replaced (a programmable thermostat is required by Title 24 when a central air conditioning system is replaced).

1.3. Prior to installation, contractors installing programmable thermostats shall explain their operation and provide the customer an opportunity to refuse the measure.

1.4. Thermostats may be moved to resolve short cycling problems in mobile homes.

1.5. HVAC filters may be replaced only as part of central furnace repair or central air conditioner replacement.

1.6. Contractors who replace filters must show customers how to remove, clean and reinstall the filters.

1.7. Replacement of refrigerant line sets is beyond the scope of this Program.

SECTION 21 PREFACE

FOR

NATURAL GAS WATER HEATER REPLACEMENT

1. *WATER HEATER REPAIR/REPLACEMENT* ~~INSTALLATION~~ POLICIES

1.1. Water heater repair or replacement may be provided only when the appliance ~~is non-operational or~~ fails NGAT, and correction cannot be achieved with Service/Adjustment by utility gas service personnel (or their designated representative).

1.2. A water heater may be replaced only if the cost of repairing the unit would be more than 50% of the cost of replacement.

~~1.1.The replacement water heater must have an energy factor of 0.60 or greater.~~

1.3. Water heater repair or replacement may be provided only if the residence is owner-occupied. Service/Adjustment may also be conducted in renter-occupied homes.

1.4. Water heater repairs and replacements will be provided only if the fuel used by the ~~furnace~~appliance is supplied by the utility providing ~~the weatherization~~LIEE program service.

1.5. Water heater replacement will not include hazardous material abatement, major structural alteration, concrete work, painting, or floor covering.

~~1.2.A new natural gas water heater can only replace an existing natural gas water heater that has failed a natural gas appliance test, and cannot be repaired in a manner that enables it to pass an appliance test.~~

NONFEASIBILITY CRITERIA FOR CAULKING

1. ~~**Already properly installed or not needed**~~***The existing caulk is functional and performing properly, even if not installed in accordance with current Installation Standards*****.**

2. **Crack does <u>not</u> penetrate the *building* envelope.**

3. **Crack/gap too wide to be caulked (wider than 5/8") and must be repaired/patched.**

4. **Customer refuses.**

NONFEASIBILITY CRITERIA FOR WEATHERSTRIPPING DOORS

1. ***The existing weatherstripping is functional and performing properly, even if not installed in accordance with current Installation Standards.*** ~~**Already properly installed.**~~

2. **Door located between two conditioned or two unconditioned areas.**

3. **Functional storm door present.**

4. **Customer refuses.**

NONFEASIBILITY FOR WATER HEATER INSULATION

All Water Heaters

1. ***The existing blanket is functional and performing properly, even if not installed in accordance with current Installation Standards.*** ~~Already properly installed~~

2. **External insulation is prohibited by the manufacturer.**

1. **T&P valve is not present, or is not located within 6" of the tank.**

2. **T&P valve outlet is plugged or capped.**

3. **Tank is exposed to weather.**

4. **Leak present in tank or water pipes.**

5. **Plastic pipe (e.g., PVC) is present in the cold or hot water line to/from the tank.**

6. **Tank is located within 12" of a stove, range, or cooktop.**

~~7.Tank capacity is greater than 100 gallons.~~

~~*10.*~~*7.* **Customer refuses.**

Gas Water Heaters

1. **Perimeter clearances prior to blanket installation** ~~is~~ ***are less than 4" between tank and door and less than 1" on sides and back.***
   ~~-For gas water heaters with non-metal closet doors: less than 4" between tank and door and less than 1" on sides and back.~~
   ~~-For gas water heaters with metal closet doors: less than 1" on the front, sides and back.~~

2. ***Gas leak present.**

3. ***Vent pipe and/or draft hood not properly installed, including:**
   - **No draft hood present.**
   - **Two draft hoods present.**
   - **Vent pipe defective or missing.**

****When these conditions exist, contact the designated utility personnel.***

NONFEASIBILITY CRITERIA FOR WATER HEATER INSULATION (continued)

4. *Evidence of improper combustion and/or venting exists as characterized by:
   - Large accumulation of soot near draft hood or on floor underneath.
   - Scorching at draft hood or combustion chamber.

5. No *appliance line valve (*gas shut-off valve*)* present.

6. *Combustion air supply improper or inadequate as characterized by:
   - The absence of both low and high vents.
   - Vent size too small.
   - Room volume is inadequate.
   - Customer refuses modifications needed to create adequate combustion air supply.

7. *Both burner access doors missing.

8. Internal insulation is R-12 or greater.

Electric Water Heaters

1. Perimeter clearances prior to blanket installation ~~is~~*are less than 1" on the front, sides and back.*
   ~~-For electric water heaters with metal and non-metal closet doors: less than 1" on the front, sides and back.~~

2. Hazardous electrical wiring/conditions are present.

3. Thermostat Cover plate(s) not present.

4. Internal insulation is R-16 or greater.

---

*When these conditions exist, contact the designated utility personnel.

NONFEASIBILITY CRITERIA FOR WATER HEATER PIPE INSULATION

1. ***The existing pipe insulation is functional and performing properly, even if not installed in accordance with current Installation Standards.*** ~~**Already properly installed.**~~

2. ***An unsafe condition is present that causes tank insulation to be nonfeasible.***

3. ***T&P valve is not present, or is not located within 6" of the tank.***

4. ***T&P valve outlet is plugged or capped.***

~~***2.***~~***5.*** **Water heater pipes are leaky.**

~~***3.***~~***6.*** **Water heater pipes are exposed to the elements (especially sunlight, which can quickly degrade the insulation).**

~~***4.***~~***7.*** **Less than 1 foot of continuous insulation can be installed.**

~~***5.***~~***8.*** **Plastic piping (e.g. CPVC) is utilized for the cold or hot water tank lines** ***to/from the tank*****.**

~~***6.***~~***9.*** **Pipes are inaccessible or the configuration prevents proper installation.**

~~***7.***~~***10.*** **Customer refuses.**

NONFEASIBILITY CRITERIA FOR COVER PLATE GASKETS

1. **Evidence of electrical malfunction or hazard, such as:**
   - **Electrical box not permanently attached.**
   - **Loose electrical connection.**
   - **Signs of burning or charring or other evidence of hazardous wiring condition.**

2. ***Gaskets are already present, even if not installed in accordance with current Installation Standards.*** **~~Already properly installed.~~**

3. **The cover plate is located on a wall between two conditioned or two unconditioned areas.**

4. **Cover plate located behind ~~fragile~~ furniture~~, heavy furniture,~~ or major appliances *that are too fragile or* too heavy to move.**

5. **Utility box is an odd size and standard gaskets will not work.**

6. **Removal of cover plate will damage the wall surface (paint, wall paper, etc.).**

7. ***Aluminum wiring is present.***

~~*7.*~~*8.* **Customer refuses.**

NONFEASIBILITY CRITERIA FOR ENERGY-SAVER SHOWERHEADS

1. **Showerarm and ball joint are not made from the same material.**

2. **Existing showerhead(s):**
   - **have a flow rate less than or equal to 3.0 gpm.**
   - **are required for medical reasons.**

3. **Existing showerarm:**
   - **is made of plastic.**
   - **is cracked, broken, or missing.**
   - **requires removal.**

4. **Shower is <u>not</u> mechanically functional.**

5. **Standard metal adapters (i.e., American Standard®, Gerber®, and Price Pfister®) will not work.**

6. **Piping is in such poor condition that showerhead installation could cause plumbing problems.**

7. **Customer refuses.**

NONFEASIBILITY CRITERIA FOR FAUCET AERATORS

1. ***The aerator is functional and performing properly, even if not installed in accordance with current Installation Standards.*** ~~**Already properly installed.**~~

2. **Faucet has special fitting for attaching appliance (e.g., portable dishwasher).**

3. **Faucet does <u>not</u> provide hot water.**

4. **The faucet or faucet threads are found to be damaged and/or leaky.**

5. ***Removal of the existing aerator is likely to cause damage to the aerator or the faucet.***

~~*5.*~~*6.* **Standard aerators will <u>not</u> fit.**

~~*6.*~~*7.* **Customer refuses.**

NONFEASIBILITY CRITERIA FOR WINDOW/WALL EVAPORATIVE COOLER INSTALLATION

1. ~~Already properly installed And~~ *The existing cooler is* operational.
2. Proper electrical service is not present.
3. *Proper exhaust ventilation is not available.*
4. ~~3.~~ Substandard wiring exists (e.g., ungrounded outlets, decayed insulation, or exposed wires).
5. ~~4.~~ No feasible window or wall location available.
6. ~~5.~~ Exterior clearance requirements cannot be met.
7. ~~6.~~ Egress requirements cannot be met.
8. ~~7.~~ Wood windows are decayed or deteriorated.
9. ~~8.~~ Siding is decayed or damaged.
10. ~~9.~~ Customer refuses.

NONFEASIBILITY CRITERIA FOR REPLACEMENT REFRIGERATORS

1. ~~The customer has an Energy Star®~~ *The* refrigerator *to be removed was manufactured after 1992*.

2. The electrical outlet used by the existing refrigerator is not properly grounded and cannot be properly grounded.

3. The refrigerator is not accessible *for removal* (*e.g.,* doors from room *are* too small, refrigerator *is* encased in tile~~, etc.~~).

4. Floor is not level and cannot safely support a new refrigerator.

5. ~~Other~~ Hazard electrical conditions exist at the outlet used by the existing refrigerator.

6. Customer refuses.

© RHA • 1/1/04 *(Rev. 9/15/05)*

NONFEASIBILITY CRITERIA FOR CENTRAL FORCED AIR REPAIRS AND REPLACEMENTS

1. *The existing furnace ~~is properly functioning and passes NGAT, or is abandoned*, or~~ is inaccessible[1].*

2. *The property is renter-occupied.*

3. *Fuel used by the existing unit is not supplied by the utility providing LIEE Program services.*

4. *Ducts cannot be brought into compliance with WIS Section 17, Duct Sealing Standards.*

5. *No furnace is present and no natural gas line or electrical outlet is available to accommodate the installation of a furnace.*

~~2.Disconnected ducts or damaged catastrophic duct leaks cannot reasonably be repaired.~~

6. *Abandonment of leaky belly-cavity return is required but not feasible.*

7. *Customer refuses.*

NONFEASIBILITY CRITERIA FOR CENTRAL FORCED AIR FURNACE REPLACEMENT

1. ~~Already properly installed~~*The existing furnace can feasibly be repaired per the Program P&P.*

2. **Required furnace drawing combustion air from outdoors, and/or ~~flue system, or~~ furnace components or flue system that are listed and labeled for manufactured home installation, cannot be obtained,**

3. **For a unit in a confined location, adequate access and/or combustion air cannot be provided.**

4. *Disconnected or damaged space heating ducts are present and cannot be repaired.*

---

[1] *See Definitions.*

~~4.~~*5.* **Depressurization by FAU non-ducted return system adversely affects an open combustion appliance, and correction *(proper isolation of return air)* is not feasible.**

~~**6.Catastrophic duct leaks cannot feasibly be repaired.**~~

~~**7.Abandonment of leaky belly-cavity return is required but not feasible.**~~

~~**8.Customer refuses.**~~

NONFEASIBILITY CRITERIA FOR CENTRAL FORCED AIR FURNACE REPAIR

1. **Repair is not economically feasible.**
   - **Repair cost exceeds guidelines of Program P&P *(i.e., cost to repair is more than 50% of the cost to replace the unit)*.**
   - **Required components listed and labeled for manufactured home installation cannot be obtained.**
   - **Depressurization by FAU non-ducted return system adversely affects an open combustion appliance, and correction *(proper isolation of return air)* is not feasible.**

~~**2.Abandonment of leaky belly-cavity return is required but not feasible.**~~

~~**3.Catastrophic duct leaks cannot feasibly be repaired.**~~

~~**4.Customer refuses.**~~

NONFEASIBILITY CRITERIA FOR CENTRAL AIR CONDITIONER REPLACEMENT

1. **Heating system can be repaired with existing refrigeration equipment intact.**

~~**2.Existing system is a combined HVAC unit and the property is renter-occupied.**~~

~~*3.*~~*2.* **Electrical service requirements cannot be met.**

~~**4.Duct damage/leaks and disconnections cannot feasibly be repaired.**~~

~~9.Existing HVAC unit is a combined fuel unit and one of the fuels is not provided by one of the following IOUs:~~

~~-Pacific Gas & Electric Company~~

~~-Southern California Edison~~

~~-Sempra Utilities~~

~~*5.*~~*3.* **System air flow is inadequate.**

~~6.Customer refuses.~~

NONFEASIBILITY CRITERIA FOR INSTALLATION REQUIRING UNDERCARRIAGE ACCESS

1. **Crawl clearance is less than 18"** ***from ground to bottom of the floor joist system or girders*****.**

2. **Any of the following conditions is present in the undercarriage area where access is required:**
   - **Hazardous insect or pest infestation.**
   - **Excessive ground moisture (standing water or mud).**
   - **Sewage waste on ground or other unsanitary condition is present which poses a health and safety hazard.**

NONFEASIBILITY CRITERIA FOR PROGRAMMABLE THERMOSTATS

1. The furnace is not being replaced.

~~*1.*~~*2.* **Already** ~~**properly installed**~~***present*** **and operational.**

~~2.Furnace utilizes a millivolt system.~~

~~3.Upgraded thermostat wiring (heavier gage or more conductors) is required.~~

~~*4.*~~*3.* **Customer refuses.**

NONFEASIBILITY CRITERIA FOR HVAC AIR FILTER REPLACEMENT

1. ***The furnace will not be repaired.***
2. ***A serviceable~~, reusable~~ filter is already present.***
3. ***The types of filters provided by the Program are specifically prohibited by the appliance manufacturer.***
4. ***Filter replacement would require removal of a flue, duct, or pipe.***
5. ***The proper filter support or retaining device is not present, and installation is not feasible.***
6. ***Customer refuses.***

NONFEASIBILITY CRITERIA FOR WALL AND WINDOW AIR CONDITIONERS

1. **Unit is already present and operational, and is less than *15 years old.* ~~required age (to be determined)10 years old.~~**

2. **A structurally sound mounting platform and/or suitable location is not available.**

3. **Electrical requirements cannot be met.**

~~4.Dwelling unit has security bars on windows.~~

~~*5.*~~*4.* Customer refuses.

© RHA • 1/1/04 *(Rev. 9/15/05)*

NONFEASIBILITY CRITERIA FOR NATURAL GAS WATER HEATER REPLACEMENT

~~**1.Existing unit is less than 10 years old and operates properly.**~~

1. The property is renter-occupied.

2. Fuel used by the existing unit is not supplied by the utility providing LIEE Program services.

3. The existing water heater:

- ~~**Is properly functioning and Passes NGAT, or**~~
- ***Is inaccessible[1], or***
- ***Can be feasibly repaired (i.e., cost to repair is less than 50% of the cost to replace the unit).***

~~2.~~4. **Drain line for T&P valve cannot be properly terminated beneath the mobile home.**

~~3.~~5. **Required access, clearance, or combustion air cannot be provided.**

~~4.~~6. **Structure/floor cannot properly and safely support the installation.**

~~5.~~7. **No suitable mounting locations for seismic bracing available.**

~~6.~~8. **A safety hazard is present which cannot be repaired (e.g., vent system defect, nonconforming gas piping, double-~~down~~draft diverter).**

9. A watertight pan cannot be installed under the unit when required.

~~7.~~10. **A plumbing condition exists (e.g., substandard plastic piping) which prevents achieving satisfactory water pipe connections.**

~~8.~~11. **Customer refuses.**

---

[1] See Definitions.