BEFORE THE PUBLIC UTILITIES COMMISSION OF

THE STATE OF CALIFORNIA

Order Instituting Rulemaking on the Commission's Proposed Policies and Programs Governing post-2003 Low-Income Assistance Programs.	R. 04-01-006
And Related Matters:	A.05-06-005 A.05-06-009 A.05-06-012 A.05-06-013

MOTION OF LOW INCOME ENERGY EFFICIENCY PROGRAM STANDARDIZATION TEAM PROPOSING REVISIONS TO THE LOW-INCOME ENERGY EFFICIENCY STATEWIDE POLICIES AND PROCEDURES MANUAL AND WEATHERIZATION INSTALLATION STANDARDS MANUALS

Georgetta J. Baker
Attorney for
San Diego Gas & Electric Company
101 Ash Street, HQ-13
San Diego, CA 92101
(619) 699-5064 (Telephone)
(619) 699-5027 (Facsimile)
gbaker@sempra.com

November 1, 2005

BEFORE THE PUBLIC UTILITIES COMMISSION OF

THE STATE OF CALIFORNIA

Order Instituting Rulemaking on the Commission's Proposed Policies and Programs Governing post-2003 Low-Income Assistance Programs.	R. 04-01-006
And Related Matters:	A.05-06-005 A.05-06-009 A.05-06-012 A.05-06-013

MOTION OF LOW INCOME ENERGY EFFICIENCY PROGRAM STANDARDIZATION TEAM PROPOSING REVISIONS TO THE LOW-INCOME ENERGY EFFICIENCY STATEWIDE POLICIES AND PROCEDURES MANUAL AND WEATHERIZATION INSTALLATION STANDARDS MANUALS

Georgetta J. Baker
Attorney for
San Diego Gas & Electric Company
101 Ash Street, HQ-13
San Diego, CA 92101
(619) 699-5064 (Telephone)
(619) 699-5027 (Facsimile)
gbaker@sempra.com

November 1, 2005

BEFORE THE PUBLIC UTILITIES COMMISSION OF

THE STATE OF CALIFORNIA

Order Instituting Rulemaking on the Commission's Proposed Policies and Programs Governing post-2003 Low-Income Assistance Programs.	R. 04-01-006
And Related Matters:	A.05-06-005 A.05-06-009 A.05-06-012 A.05-06-013

LOW INCOME ENERGY EFFICIENCY PROGRAM STANDARDIZATION TEAM PROPOSED REVISIONS TO THE LOW-INCOME ENERGY EFFICIENCY STATEWIDE POLICIES AND PROCEDURES MANUAL AND WEATHERIZATION INSTALLATION STANDARDS MANUALS

In compliance with the Assigned Commissioner's Ruling of June 7, 2005, San Diego Gas & Electric Company, on behalf of the Low Income Energy Efficiency (LIEE) Program Standardization Team (Team) for the LIEE Program, files these proposed revisions to the LIEE Statewide Policies and Procedures Manual and Weatherization Installation Standards Manual. The proposed revisions: (1) refine current policies, procedures and standards; (2) add policies and standards relating to additional energy efficiency measures recommended for inclusion in the 2006 LIEE Program which are pending Commission approval; and (3) accommodate recent changes in California's Title 24.

Respectfully submitted,

By: 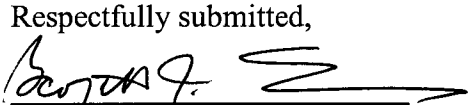

Georgetta J. Baker
Attorney for
San Diego Gas & Electric Company

November 1, 2005

REVISIONS TO THE LOW-INCOME ENERGY EFFICIENCY STATEWIDE POLICIES AND PROCEDURES MANUAL AND WEATHERIZATION INSTALLATION STANDARDS MANUALS

1. Introduction

This document describes a set of changes proposed by the Low Income Energy Efficiency (LIEE) Program Standardization Team (Team) for the LIEE Program. Three kinds of changes are covered by the recommendations: changes designed to refine current policies, procedures, and standards; additional policies and standards relating to additional energy efficiency measures recommended for inclusion into the 2006 LIEE Program; and changes needed to accommodate recent changes in California's Title 24 standards. The background for these changes is summarized briefly below.

1.1. Changes Designed to Refine the Operation of the Program

In an Assigned Commissioner Ruling (ACR or Ruling) issued on October 1, 2004, the Commission directed the Team to review the LIEE Policy and Procedures (P&P) Manual and the Weatherization Installation Standards (WIS) Manual to ensure that the current LIEE program manuals remained up to date, and to develop the necessary proposed standards and manual changes in time for program year (PY) 2005. On October 15, 2004[1], the Team filed the Phase 5 work plan, and schedule covering the development of such recommendations. On October 22, 2004, an Assigned Commissioner Ruling (ACR) adopted the work scope and budget and directed the Team to review and file recommended manual changes with the Commission.

On January 18, 2005, the Team filed recommended changes to the 2005 P&P and WIS Manuals, along with an explanation of the reasons for recommended changes. Most of the changes were made to a.) comply with changes in codes and standards; b.) respond to questions and comments from field staff; c.) bring P&P and WIS Manuals into consistency with each other; and d.) clarify policies previously recommended by the Team, some of which the Commission had already adopted.

Parties filed comments on the Team's filing on March 14, 2005. Those comments focused primarily on three issues. First, parties objected to the lack of public workshops designed to obtain input on recommended changes. Second, parties took issue with recommended changes in the 80-20 rule for qualifying units in multi-family buildings for Program measures. Third, Parties objected to the characterization of furnace repairs and replacement

[1] The October 1st Ruling directed the Team to file the work plan by October 8, 2004. However, the Commission granted an extension to file the work plan by October 15, 2004.

as minor home repairs warranted only in cases where the furnace failed a natural gas appliance test (NGAT). On March 25, 2005, an ACR was issued instructing the Team to withdraw its January 18, 2005 filing, to solicit public input on the proposed changes, and to resubmit its recommendations.[2] In its April 11, 2005 reply to the ACR, the Team withdrew its recommendations, agreed to institute a new process for consideration of recommendations, and committed to the submission of a revised scope of work accommodate this additional effort. The revised scope of work, for what was called Phase 5.1 of the Standardization Project, was submitted by the Team on April 25, 2005 and approved by the Commission in an ACR dated June 7, 2005.

1.2. Changes Necessitated by the Inclusion of New Measures in the 2006 Program

Commission Decision (D.) 03-11-020, issued on November 13, 2003, directed the Team[3] to develop recommendations for new measures for PY 2006. As directed in Ordering Paragraph 16, of D.03-11-020, the Team conducted "a cost-effectiveness evaluation and develop[ed] recommendations, with public input." The Team filed its "Report on the Assessment of Proposed New 2006 LIEE Measures" on May 2, 2005. It recommended adding three measures to the Program in 2006: duct testing and sealing, air conditioner tune-ups, and high efficiency central air conditioners. In a subsequent filing dated September 7, 2005, the Team withdrew its recommendation to add air conditioner tune-ups as a Program measure, and instead recommended the implementation of a pilot program for this measure. While the Commission has not yet ruled on these recommendations, the Team recognized the need for developing appropriate standards and policies, and requested support for this development process in its work scope for Phase 5.1 of the Standardization Project. The Commission's June 7, 2005 ACR approved this request.

1.3. Changes made to Accommodate Changes in Title 24

As pointed out in the Team's proposed Phase 5.1 work scope, significant changes have just been made in the California Energy Commission (CEC) Title 24 Building Energy Efficiency Standards and Residential Compliance Manual for 2005. These changes, which include several heating, ventilating, and air conditioning (HVAC) efficiency requirements affecting existing residential buildings, will have a significant impact upon the utilities' LIEE Program.

---

2 *Assigned Commissioner's Ruling Directing the Standardization Team to Withdraw and Refile its Proposal Related to Phase 5 of the Low Income Energy Efficiency Standardization Project*, March 25, 2005.

3 The Team consists of Pacific Gas & Electric Company, Southern California Edison, Southern California Gas Company, San Diego Gas & Electric Company, and the joint utilities technical consultants, with coordination assistance from the Commission's Energy Division and participation by the Office of Ratepayer Advocates.

Effective October 1, 2005, some HVAC repairs and all replacements are considered "alterations" that are subject to Title 24 regulations. In those CEC climate zones with predominantly cold and/or hot climates, duct testing and sealing is now mandated when HVAC alterations are performed, and the completed jobs will be subject to third party verification by a Home Energy Rating System (HERS) rater (documentation of which will be required to finalize the building permit).

In order to comply with the October 1, 2005 effective date, the Team had to revise the Statewide P&P and WIS Manuals to put in place criteria that address HVAC alterations and required HERS field testing and verifications. The development of these changes was included in the Phase 5.1 work scope and approved by the Commission.

2. Procedures

The Team has developed the current recommendations for changes in Program policies, procedures and installation standards through an extremely open process. Since the beginning of Phase 5.1, the Team has opened its meetings to all members of the public. Several open meetings have been held over this period of time. These meetings were held at various sites across the state, on April 26, May 10, June 22, June 28, July 25-26, August 12, August 23, September 8-9, and October 11. Additional, public workshops were held to solicit additional public input. These workshops were held in San Diego on September 29 and San Francisco on September 30. Copies of the minutes of all meetings and workshops are appended to this filing.

3. Summary of Changes

As noted above, changes in the P&P and WIS Manuals are being recommended for three purposes: to refine current policies, procedures, and standards; to accommodate the addition of two energy efficiency measures into the 2006 LIEE Program (duct testing and sealing and high efficiency central air conditioners); and to accommodate recent changes in California's Title 24 relating to alterations. Recommended changes are summarized below, by manual and section. Subsection 3.1 addresses changes to the P&P Manual and Subsection 3.2 addresses changes to the WIS Manuals.

3.1. Recommended Changes to the P&P Manual

Section 1. Introduction

Changes in this section are minor. They include changing the Program Year and deleting two references that are no longer relevant.

Section 2. Customer and Structural Eligibility

This section contains several clarifications and some substantive changes, as follows:

In Subsection 2.2.1, the definition of the two tiers relating to income eligibility is clarified, the process of setting income guidelines is clarified, and the specific income guidelines are updated for the period June 1, 2005 through May 31, 2006.

In Subsection 2.2.2, the list of examples reflecting the types of income is expanded, and acronyms are defined in Table 2-2.

In Subsection 2.2.3, the wording relating to the use of CARE income verification for the verification of LIEE income eligibility is made more explicit, the definition of a current award letter is changed to reflect the intent of the requirement, and the term "weatherization" is changed to "Program services" whenever the intent is to refer to the full range of Program services. These changes are also made throughout the manual to avoid confusion. Given that weatherization refers to only a subset of Program services, the term has been used inappropriately in the past. Finally, several references in Table 2.3 are updated to be consistent with current Internal Revenue Service (IRS) forms. Furthermore, it is made explicit that the types of documentation listed in Table 2-3 are examples rather than exhaustive lists, and that the program managers will work with outreach contractors to develop more exhaustive lists. This last change was made in response to a suggestion by one of the contractors attending Team meetings.

In Subsection 2.2.4, the definition of gross income for self-employed persons is clarified.

In Subsection 2.2.6, the treatment of multi-family buildings and mobile homes has been changed. Mobile homes have been dropped from the 80-20% policy because the rationale for this rule does not apply to individual detached dwelling units like mobile homes.

Changes to the 80-20% rule have also been proposed for multi-family buildings. However, the proposed change is less substantial than that proposed by the Team in its January 18, 2005 filing. In that earlier filing, the Team proposed to drop the 80% rule for income eligibility for all measures other than ceiling insulation in common attic spaces of multi-family buildings. The rationale for this change was that with limited budgets, Program services should only be offered to households that satisfy income eligibility requirements. Initially, the 80% rule was meant to provide that Program measures would be installed in multi-family units that were not occupied by income-eligible households at the time of treatment, but that would be likely to be occupied by eligible households at some later date. The implicit assumption underlying the provision was that Program measures would stay with the dwelling, and would eventually benefit low-income households. However, the

Program offers an increasingly wide range of measures that are transportable, and are likely to go with the current occupants. Examples would be compact fluorescents, refrigerator replacements, evaporative coolers, and high efficiency window/wall air conditioners. In light of this, and given the need to concentrate Program funds on households that meet the income eligibility requirements, the Team recommended that the 80% rule be dropped for both multi-family buildings and mobile homes, with the exception noted for ceiling insulation. However, discussions with members of the public have convinced the Team to modify its initial recommendation. We now propose that "transportable" measures, including refrigerators, evaporative coolers, high efficiency window/wall air conditioners and central air conditioners be provided to only income eligible households, but that all other measures be offered to individually income-ineligible households provided that the 80-20% criterion is met.

In Subsection 2.3.1, two changes are recommended. The first would institute a requirement that the household be served by an active utility meter to be eligible for the Program. The second would provide that in overlap areas (areas served by different gas and electric investor-owned utilities (IOUs) that the utility providing the heating fuel be the primary provider of weatherization services (services that affect heating and/or air conditioning). It also provides that in the event that the home has air conditioning but uses a non-IOU heating fuel, the electric IOU be primarily responsible for weatherization other than infiltration reduction.

Also in Subsection 2.3.1, a reference is added to recognize that water heaters may be repaired or replaced in owner-occupied homes if necessary to mitigate natural gas appliance testing (NGAT) problems.

In section 2.4, the 80% rule is dropped for master-metered mobile homes and modified for multi-family buildings, to make this consistent with Subsection 2.2.6.

In Subsection 2.5, the income eligibility requirement for migrant housing centers is changed. Under the new wording, a residential facility on non-residential rates would be considered income-eligible if the facility is participating in the CARE program. No additional income verification would be required for LIEE. It is the Team's position that this modification is consistent with the spirit of AB 868 (which provides that migrant housing centers are presumed to be income-eligible without verification), as well as the general treatment of other group facilities under CARE.

Subsection 2.6 has a number of editorial changes designed to clarify policy.

Subsection 2.7.2 has been modified to incorporate approved Commission policy on the replacement of water heaters in owner-occupied homes.

Subsection 2.8 has been changed to provide for a number of exceptions to the 10-year rule for returning to homes previously treated under the Program. The first of these exceptions, which relates to ceiling insulation, was proposed in the January 18 filing. The others are being proposed now in response to suggestions made by contractors and other members of the public. The exception for homes previously receiving infiltration-reduction measures (but no furnace replacement) was made to avoid potential hazards caused by furnace malfunctions after the installation of infiltration-reduction measures. The exception for refrigerators is recommended due to the reliability of savings from high efficiency units and the ease of returning to the home for the delivery of refrigerators. The fourth exception is proposed to allow for the provision of infiltration-reduction measures in homes where the failure of the NGAT pre-assessment prohibited the installation of these measures, but where conditions leading to this failure have been resolved. Another exception is proposed temporarily: homes may be revisited for the installation of high efficiency air conditioners in the SCE service area, where, until recently, measures were offered under a series of programs rather than under a single comprehensive program.

Subsection 2.9 has been modified to add window-wall air conditioners to the list of individual measures that would satisfy the requirement for the need for LIEE services. The major change is a clarification that homes treated by separate gas and electric IOUs be treated as if they were served by a single combined utility. This provides for equity across households in different service areas. A clarification has also been added to emphasize the requirement that all feasible measures must be installed in participating homes.

References to group energy education have been dropped, as have references to pre-approval.

Section 3. Customer Outreach and Customer Relations

No changes are proposed for this section.

Section 4. Procedures for Pre-Installation Contacts

Subsection 4.2 has been modified to delete the reference to customer rights and to clarify the types of services offered under the Program. The reference to customer rights is unnecessary because the Commission has previously rejected the Standardization Team's proposed Customer Bill of Rights, and no other statement of these rights has been developed.

Subsection 4.7 clarifies that income documentation and owner approval must be collected prior to installation of measures, but not necessarily during the initial home visit. This is consistent with current practice.

Section 5. Program Measures for PY 2005

Section 5.3 has been modified to recognize that the Commission now has a process for considering new measures for the Program.

Table 5-1 in Section 5.3 has been updated to reflect current (and proposed) Program offerings. It has also been revised to characterize furnace and water heater repairs and replacements as types of minor home repairs, rather than free-standing measures. Under the proposed change, these measures fall under minor home repairs because they are offered only to accommodate the installation of infiltration-reduction measures when the NGAT fails. It should be noted that high efficiency water heaters were recently dropped as a free-standing measure, so this change is consistent with Commission policy. The Team feels that furnace repairs and replacements should also be considered a minor home repair for the sake of consistency.

Table 5-1 has also been updated to reflect the current agreement between SCE and SoCalGas in their overlap area.

Finally, Table 5-1 has been revised to provide information on measure offerings by CEC climate zone, rather than by service area. The reason for this is twofold: first, measure eligibility does vary across climate zone because of differences in cost-effectiveness; second, as a result of the standardization process, all measures are now offered in all service areas covered by the gas and electric IOUs.

Section 6. Minor Home Repairs

Subsections 6.1, 6.2 and 6.3 have been changed to specifically recognize furnace and water heater repairs and replacements as types of minor home repairs rather than free-standing measures. This characterization, which was also contained in the Team's January 18, 2005 filing, has come under some criticism from contractors. Many contractors have expressed the desire for the Program to offer furnace repair and replacement as a separate measure, possibly in cases where the existing unit is older than some threshold age. While the Team maintains its recommendation to repair or replace space heaters only when they fail the NGAT, we have broadened the definition of NGAT fails (see below). Moreover, we have committed to assess the cost-effectiveness of furnace repairs and replacements as a program measure using the standard cost-effectiveness methodology used for other measures. The Team has submitted a work scope and budget for a series of tasks including this cost-effectiveness assessment.

In Section 6.2, the definition of NGAT fails is expanded to include the absence of a furnace in cases where another gas appliance (e.g., an oven) is used for space heating. This change

was made in response to comments made by members of the public. Section 6.2 also makes explicit the corrections that may be made to pass the NGAT protocol. Note: these changes include correcting combustion ventilation air (CVA) deficiencies. This modification was also made on the basis of public input.

Section 6.3 has been modified in three ways. First, it has been altered to include a set of caps for water heater repairs and replacements. The cap is set slightly above the current installed cost of natural gas water heaters. Second, the caps for furnace repairs and replacements have been changed to recognize differences in costs across heating system types. These costs are based on the assumption that furnace replacements just comply with efficiency standards, rather than exceeding these standards. This assumption may change upon further consideration of the cost-effectiveness of requiring high-efficiency replacement units. Third, the overall per-home cap on all minor home repairs has been increased to reflect the addition of water heater repairs and replacements as minor home repairs. Fourth, program budget limits on the average cost of minor home repairs have been dropped, because they are inconsistent with other program policy. Specifically, within per-home constraints, all such feasible repairs must be made in participating homes, no matter what share of overall program costs are expended for this purpose. In Table 6-9, it is also clarified that the per-home caps do not include any costs of complying with new Title 24 regulations relating to duct testing and sealing.

Section 6.4 has been edited to include the mitigation of NGAT fails as a priority in the choice of minor home repairs when providing all minor home repairs to a home would exceed the per-home cap.

Section 7. Measure Installation Policies and Procedures

A variety of changes are proposed for Section 7. These changes would:

- Add high efficiency central air conditioners and duct testing and sealing (proposed new measures) to the list of measures, and specify measure-specific policies for these measures (Subsections 7.3.1, 7.3.21 and 7.3.22).
- Add a section on duct testing and sealing as a means of complying with new Title 24 requirements (Subsection 7.3.23).
- Recognize the repair/replacement of natural gas water heaters under the NGAT policy (Subsections 7.3.1 and 7.3.18).
- Clarify that measures are non-feasible if the measure is already present, even if it has not been installed strictly in accordance with the current Weatherization Installation Standards (several subsections).
- Clarify attic clearance requirements (Subsection 7.3.4).

- Bring policies relating to furnace repairs and replacements into consistency with adopted NGAT policy (Subsection 7.3.18).
- Modify non-feasibility conditions and other policies for natural gas water heater repair or replacement to recognize that this is no longer a measure but rather a minor home repair offered only to mitigate NGAT fails (Subsection 7.3.18).
- Revise the age requirement for refrigerators to be replaced, using 1993, the year in which efficiency standards were revised significantly, as the threshold year (Subsection 7.3.19). Also, to relax restrictions on the sizes of replacement refrigerators.
- Revise the age requirement for window/wall air conditioners from 10 years to 15 years to better reflect the expected lifetime of these units (Subsection 7.3.20).
- Integrate policies on programmable thermostats and furnace filter replacements into the sections on furnace repair and replacement and air conditioning replacement, in recognition that these are minor home repairs done only when furnaces and/or air conditioners are replaced.
- Clarify a variety of specific policies and non-feasibility conditions and bring these into consistency with the WIS Manual.

Section 8. Inspection Policies

Subsection 8.3 has been updated to reflect current pre-inspection policies followed by the four IOUs.

Section 8.4.7 has been revised to provide for reimbursement of installation contractors when a fail or correction finding is reversed by an arbitrator. This change was made on the request of contractors attending Team meetings.

Section 9. Contractor Eligibility

No substantive changes are recommended for this section. However, the language on licensing requirements (Section 9.3) has been clarified.

Section 10. Natural Gas Appliance Testing

Section 10.2.2 has been modified to exclude reference to Rapid Deployment policy and to clarify language relating to LIEE services.

Section 10.2.2 has been modified to incorporate the Team's recommended NGAT policy for homes using combustion fuels other than IOU natural gas for non space heating end uses.

This proposed policy was submitted to the Commission in a March 12, 2004 filing, but the Commission has not yet ruled on it.

Section 10.3, which provides a description of NGAT protocols has been expanded significantly to provide more explicit detail on the sequence of steps to be undertaken under those protocols.

Section 10.4 has been changed to provide for the completion of the NGAT within five (5) working days from the date infiltration reduction measures are installed. The purpose of this change is to minimize inconvenience for participants and to avoid any potential safety problems. Subsection 10.4.2 has been deleted because it is no longer consistent with Section 10.2.2.

Section 10.5 has been edited to clarify the difference between services/adjustments and repairs of appliances under the NGAT protocols. It has also been amended to clarify that leaky gas water heaters will be considered NGAT failures, and will be eligible for replacement.

Section 10.7 has been added to provide explicit non-feasibility criteria for NGAT. These criteria are consistent with current LIEE policy.

3.2. Recommended Changes to the WIS Manual

As with the P&P, most of the changes recommended by the Team are designed to update the WIS for Program Year 2005 and to add procedures considered previously by the Commission. Revisions were made in several WIS sections; however, the most substantive changes were (a) the addition of three new WIS sections (Duct Testing, Duct Sealing, and Central High Efficiency Air Conditioners), and (b) modifications to Section 29, Natural Gas Appliance Testing. WIS revisions were made on the basis of field experience gained over the past two years and in response to changes in building codes and Title 24 standards, and they bring the program into compliance with the Commission order. For sections with substantive revisions, the changes are summarized below by section for the Conventional Home WIS. When applicable, the identical changes were made in the Mobile Home – WIS.

WIS Definitions

Definitions, primarily NGAT related, were added to clarify meanings and eliminate misunderstandings.

WIS Preface Pages and Non-feasibility Criteria

Modifications were made to establish consistent language within the Conventional Home WIS, Mobile Home WIS, and the LIEE P&P.

WIS Section 3. Ceiling Insulation

The minimum R-value requirement for attic access doors on page 3-20 was changed to be consistent with the CEC retrofit insulation requirements. The subsection on Catastrophic Duct Leaks and Disconnections was deleted and the new Section 20, Duct Sealing Standards, is referenced instead. Crawl clearance criteria were added to the Nonfeasibility Criteria to address obstructions in the attic.

WIS Section 5. Water Heater Insulation Standards

Language was added to recognize presence of a "gas shutoff valve", which may be used under certain conditions in lieu of a temperature and pressure (T&P) relief valve. The ID label location was changed from "mark but don't cut" to "mark and cut". This makes product information on the ID label readily accessible. Language was also included to address floors that are not adequately sound to support the weight of the water heater. Several edits and sentence structure modifications were made to the Non-Feasibility Criteria to clarify language and remove ambiguity.

WIS Section 6. Water Heater Pipe Insulation Standards

The requirement for plastic cable ties to be UV-resistant was deleted, because degradation from sunlight is not a concern with pipe insulation attachments. R-value wording was modified to conform to Title 24 standards.

WIS Section 10. Duct Testing Standards

This is a new WIS section, based on Title 24 standards, developed for the new Duct Testing and Sealing measure.

WIS Section 12. Window Replacement Standards

Title 24 energy efficiency requirements were added, and glazing compound standards references were updated.

WIS Section 14. Thread-Based Compact Florescent Lamps (CFLs)

Wording was corrected to "ENERGY STAR® qualified". The size and weight of CFLs has been reduced significantly, especially during the past few years; thus the precautionary language related to weight, table lamp balance, cluster lighting, and cord lamp holders was modified or removed.

WIS Section 15. Hard-Wired Compact Florescent Fixtures

Wording was corrected to "ENERGY STAR® qualified". Text was added to specify pin-based lamps meeting Title 24 high efficacy standards.

WIS Section 16. Window and Wall Evaporative Cooler

The clearances requirements for sidewalks, and minimum above-floor requirement, were modified to allow less clearance when permitted by local code. Item 10, Egress Windows, was expanded to be consistent with Window Air Conditioner standards. Height criteria was relaxed to accommodate existing wall-mount locations under windows and installation in windows less than 5 feet above the floor. Exterior clearance from a gas meter was reduced to match utility guidelines, and interior clearance criteria were added.

WIS Section 17. Refrigerator Replacement

Wording was corrected to "ENERGY STAR® qualified". The 10-years-old criterion for replacing an existing refrigerator was changed to be consistent with the proposed wording of the P&P Manual. Program Manager approval was added for extension cords. The use of extension cords should be avoided when possible. Receptacle orientation was expanded to include ground lug on top to accommodate plugs with that design.

WIS Section 18. Natural Gas Central Forced Air Heating Systems Repair and Replacement Standards

Wording was corrected to "ENERGY STAR® qualified". AFUE and SEER/EER ratings were changed to match Title 24 standards. Programmable Thermostat criteria were modified to include ENERGY STAR qualification and to allow battery-powered units for millivolt systems. References were added to Title 24 duct leakage maximum and to the new Duct Testing and Duct Sealing WIS sections.

WIS Section 19. Natural Gas Wall & Floor Furnace Repair & Replacement

Efficiency criteria on page 19-1 were modified to match Title 24 standards. Criteria were added on page 19-9 to accommodate the option on some wall furnace models allowing installation of the thermostat on the side of the furnace cabinet instead of on the wall. Page 19-20 was modified to clarify burner performance criteria. Criteria for CO measurement and appliance draft/spillage tests were replaced with a reference to new WIS Section 29, Natural Gas Appliance Testing (NGAT) Standards.

WIS Section 20. Duct Sealing Standards

This is a new WIS section developed for the new Duct Testing and Sealing measure.

WIS Section 21. Central High Efficiency Air Conditioner Standards

This is a new WIS section developed for the new Central High Efficiency Air Conditioners measure.

WIS Section 22. Wall and Window Air Conditioner

Wording was corrected to "ENERGY STAR® qualified". Similar to the evaporative cooler standards, clearances for wall and window air conditioners were modified. Distance from sidewalks and height above the floor were modified to permit less clearance when allowed by local code.

WIS Section 25. Natural Gas Water Heater Replacement

The 10-year age limit for replacement, which had inadvertently been left in, was removed. Provision for instantaneous (tankless) water heaters was added, and Energy Factor criteria were modified to match Title 24 standards and the 2004 federal standards. California Mechanical Code (CMC) references were updated, and text was added to address use of gas shutoff and pressure-relief valves in lieu of T&P valve and drain line. Criteria were modified to comply with the NGAT protocol and Section 6, 7 and 10 of the P&P.

WIS Section 29. Natural Gas Appliance Testing (NGAT)

In addition to criteria changes, this section was divided into five stand-alone parts, which are geared to three categories of users: Assessors, NGAT Technicians, and Appliance Repair/Replacement Technicians. The five Parts are:

- Part 1: General Criteria (for all users)
- Part 2: Pre-Weatherization NGAT Evaluations (for Assessors)
- Part 3: Weatherization Crew Verifications (for NGAT Technicians, to verify that problems which preclude Infiltration Reduction Measures are addressed)
- Part 4: Post-Weatherization NGAT Procedures (for contractors' NGAT Technicians)
- Part 5: Post-Repair/Replacement Checks (for Repair/Replacement Technicians)

Part 1: This section includes a condensed version of Part 4 (described below). NGAT applicability was clarified, and definitions of "Abandoned" and "Inaccessible" appliance were moved to the Definitions section. Pre-Weatherization Assessment was expanded to include previously-overlooked conditions found through experience to be problems if not discovered prior to weatherization.

Part 2: This is an abbreviated version of Parts 3 and 4, so explanations appear there.

Part 3: Weatherization Crew Verifications to be performed *before* installing measures were added to ensure that conditions unfeasible to correct are not discovered *after* infiltration-reduction measures have been installed.

Part 4: Wording was added to clarify that only appliances repaired or replaced after failing NGAT will undergo post repair/replacement testing. The term "qualified technician" was defined as a "utility gas service technician or designee." Other specific modifications are listed below:

- Item 10 was modified to (a) eliminate the misunderstanding that liquid may be sprayed on the gas *control* valve, and (b) to include Soldered Gas Connectors, which had been unintentionally omitted.
- In Item 11, (a) CVA criteria were expanded and rearranged to more clearly explain confined and unconfined spaces, and to address appliances located in garages, attics and crawlspaces; (b) acceptance of a single upper CVA vent was reinstated in accordance with the 2003 International Fuel Gas Code (IFGC), providing an option for homes in which installing a lower CVA vent is problematic; and (c) language was modified to clarify attic height requirement, acceptable duct/sleeve materials, and requirement for screening applies only on vents to outdoors.
- Item 12, "Flue and Vent System Examination" was extracted from "Flue and Vent System Examination and Repair" and moved forward to coincide with appliance-off examinations. Minimum distance from a door/window was reduced from 10 feet to 4 feet in harmony with the CMC 4-ft. clearance requirement for vent terminations near windows and doors. Text was added to clarify clearance requirements for direct vent appliances and forced/induced draft system.
  Distance of vent pipes from a wall was reduced from 8 feet (current CMC) to 4 feet, which was code when most housing receiving retrofit weatherization was built. Criteria were added to address water heaters in enclosures attached to the outside wall of a dwelling.
- Item 13, Visual Appliance Checks, was extracted from "Additional Appliance Examinations" and was modified and moved forward to coincide with appliance-off appliance checks.
- Items 14 – 18 include terminology changes to more accurately describe the work actually performed in each step. "Room Ambient CO Test #1" was changed to "Room Ambient CO Test," and "Room Ambient CO Test #2" was changed to "Appliance Ambient CO Test".
- Item 16 wording was revised for clarity.
- In Item 17, (a) garage and attic/crawl space criteria were modified to address "worst case" conditions; (b) the instruction to operate all appliances that can affect the tested appliance (applicable when Flue CO is measured) was removed, because appliances are operated *individually* for Ambient CO testing; (c) the door position *Exception* was added to include a condition that is "worst case" when a room with a clothes dryer also contains a water heater; and (d) installation of existing interior cooler covers was added, because it is also a "worst case" condition.
- In Item 18, (a) for Natural Gas Heating Appliances, "Forced air" was changed to "Ducted units" to avoid excluding Gravity furnaces; (b) criteria were added for tankless water heaters; (c) reference to Gas Fireplaces was removed, because the

NGAT protocol does not address them; (d) CO Action Level text was inserted for Water Heaters and Cooking Appliances; and (e) text was added to clarify the cook top and oven/broiler testing protocol.

- In Item 19, Draft Testing of ovens vented outdoors was added.
- Item 20 was reworded for clarity, "CO Action Level" was inserted to eliminate the need to reference an earlier item, and Action Level parts per million (ppm) values were added.
- In Item 21, language was removed that is not applicable to Ambient CO testing.
- Item 22 was renamed and combined with heat exchanger examination criteria. It now addresses only "additional appliance examinations" performed with appliances *operating* (appliance-off checks were moved up to Item 13).
- Item 23 was modified to address only Flue/Vent *Repairs* (simple examinations were moved up to Item 12).

Part 5: Post-Repair/Replacement checks were relocated to Part 5. Item 28 was clarified to indicate that CO Testing can be *either* Ambient CO or Flue CO measurements when Post-Repair/Replacement checks are performed. Table 29-2 was created to list approved Post-Repair/Replacement Flue CO Testing criteria.

Non-Feasibility Criteria: The page was modified for accuracy and improved clarity. Because of the consumer safety and liability issues associated with not performing NGAT, "Customer Refuses" was removed.

WIS Appendix A. Combustion and Ventilation Air Requirements for Gas Furnaces/Heaters and Water Heaters

References to the California Mechanical Code (CMC) were updated and references to the 2003 International Fuel Gas Code (IFGC) were added. Allowance for a single upper CVA vent was reinstated in accordance with the 2003 IFGC.

WIS Appendix D. Methods for Estimating and Measuring Airflow

This appendix was added in concert with Section 10, Duct Testing Standards. It addresses methods for estimating and measuring HVAC system fan flow (airflow), which are procedures made necessary by the Title 24 requirement for assessing duct leakage as a percentage of system airflow.

4. Request

The Standardization Team requests that the Commission approve the above recommended changes as quickly as possible, so that these changes can be incorporated into the manuals and contractor training materials prior to the beginning of the 2006 program year.

The Standardization Team plans to make a subsequent filing to further revise the P&P and WIS manuals in order to comply with the Commission Decision issued on October 27, 2005 pertaining to the *Interim Opinion Approving Various Emergency Program Changes In Light Of Anticipated High Natural Gas Prices In The Winter Of 2005-2006*.

2006
Low Income Energy Efficiency Program Statewide Policy and Procedures Manual

Applicable to:

Pacific Gas & Electric Company
Southern California Edison Company
Southern California Gas Company
San Diego Gas & Electric Company

October 25, 2005

Table of Contents

1 Introduction 1-1

1.1. Overview 1-1
1.2. Structure of this Manual 1-2

2 Customer and Structural Eligibility 2-1

2.1 Overview 2-1
2.2 Income Requirements 2-1
2.2.1. Income Guidelines 2-1
2.2.2. Types of Income Included in Household Income 2-2
2.2.3. Verification of Income 2-3
2.2.4. Household Income Calculation Procedures 2-6
2.2.5. Determining Household Size 2-6
2.2.6. Qualifying Multifamily Complexes 2-6
2.3 Service Eligibility 2-7
2.3.1. General Service Eligibility Conditions 2-7
2.3.2. Referrals 2-8
2.4 Treatment of Master-Metered Units 2-9
2.5 Structural Eligibility 2-10
2.6 Home Ownership Documentation 2-12
2.6.1. Overview 2-12
2.6.2. Multiple Ownership 2-13
2.6.3. Life Estate/Living Trust 2-13
2.6.4. Power of Attorney (POA) 2-13
2.6.5. Property Management Companies 2-13
2.7 Treatment of Rental Units 2-14
2.7.1. Property Owner Approval 2-14
2.7.2. Eligibility of Rental Units for Certain Measures 2-14
2.8 Previous Program Participation 2-14
2.9 Need for LIEE Services 2-15

3 Customer Outreach and Customer Relations 3-1

3.1 Introduction 3-1
3.2 Customer Outreach 3-1
3.2.1. Promotional Guidelines 3-1
3.2.2. Representations by Contractor and Contractor's Employees 3-1
3.2.3. Outreach Interaction 3-1
3.3 Customer Relations 3-2
3.3.1. Introduction 3-2
3.3.2. Expedient Service 3-2
3.3.3. Other Work 3-2
3.3.4. Staff Identification 3-2
3.3.5. Crew Appearance 3-2
3.3.6. Clients 18 Years or Older 3-2
3.3.7. Customer Complaint Procedures 3-3

3.3.8. Substance Abuse and Smoking Policy *3-3*
3.3.9. Incident Report *3-3*

4 Procedures for Pre-Installation Contacts 4-1

4.1 Introduction 4-1
4.2 Description of Program Services 4-1
4.3 Data Collection 4-2
4.4 In-Home Energy Education 4-2
4.5 In-Home Energy Assessment 4-3
4.6 Installation of Compact Fluorescent Light Bulbs 4-3
4.7 Other Responsibilities 4-3

5 Program Measures for PY 2006 5-1

5.1 Introduction 5-1
5.1. Program Measures for 2006 5-1
5.2. Consideration of Changes to Measure List 5-1

6 Minor Home Repairs 6-1

6.1 Introduction 6-1
6.2 Minor Home Repairs 6-1
6.3 Limits on Minor Home Repairs 6-4
6.4 Prioritization of Minor Home Repairs 6-6

7 Measure Installation Policies and Procedures 7-1

7.1 Introduction 7-1
7.2 General Installation Policies 7-1
7.2.1. Introduction *7-1*
7.2.2. Installation by Contractor *7-1*
7.2.3. Installation Standards *7-1*
7.2.4. Safety *7-2*
7.2.5. Installation of Feasible Measures *7-2*
7.2.6. Lead-Safe Practices *7-2*
7.2.7. Site Clean-Up Policies *7-2*
7.2.8. Weatherization of Mobile Homes *7-2*
7.3 Measure-Specific Policies 7-3
7.3.1. Introduction *7-3*
7.3.2. Caulking *7-4*
7.3.3. Weather Stripping Doors *7-4*
7.3.4. Ceiling Insulation *7-6*
7.3.5. Water Heater Blankets *7-9*
7.3.6. Water Heater Pipe Insulation *7-11*
7.3.7. Cover Plate Gaskets *7-11*
7.3.8. Energy-Saver Showerheads *7-12*
7.3.9. Faucet Aerators *7-13*
7.3.10. Evaporative Cooler and Window/Wall Air Conditioner Vent Covers *7-13*
7.3.11. Exterior Door Replacements *7-14*
7.3.12. Window Replacements *7-14*
7.3.13. Glass Replacement *7-15*
7.3.14. Thread-Based Compact Fluorescent Lamps (CFLs) *7-15*
7.3.15. Hard-Wired Compact Fluorescent Lamp Porch Light Fixtures *7-16*
7.3.16. Window/Wall Evaporative Cooler Installation *7-16*

7.3.17. Furnace Repair and Replacement *7-17*
7.3.18. Natural Gas Water Heater Repair or Replacement *7-21*
7.3.19. Refrigerator Replacement *7-22*
7.3.20. High Efficiency Window/Wall Air Conditioner *7-23*
7.3.21. High Efficiency Central Air Conditioners *7-23*
7.3.22. Duct Testing and Sealing as a Program Measure *7-25*
7.3.23. Duct Testing and Sealing as a Means of Title 24 Compliance *7-27*

8 Inspection Policies 8-1

8.1 Introduction 8-1
8.2 Inspection Personnel 8-1
8.3 Pre-Installation Inspection 8-1
8.4 Post-Installation Inspection 8-3
8.4.1 General Polices on Post-Installation Inspection *8-3*
8.4.2 Types of Pass Rates *8-3*
8.4.3 Post-Installation Inspection Frequency *8-3*
8.4.4 Hazardous Fails *8-4*
8.4.5 Failed Inspection Dispute Resolution *8-4*
8.4.6 Failure to Install Feasible Measures *8-5*
8.4.7 Charge for Reinspection *8-5*
8.4.8 Inspection Waivers *8-5*
8.4.9 Post Installation Job Correction Policies *8-6*

9 Contractor Eligibility 9-1

9.1 Introduction 9-1
9.2 Insurance Requirements 9-1
9.3 Licensing Requirements 9-2

10 Natural Gas Appliance Testing 10-1

10.1 Introduction 10-1
10.2 Applicability of Natural Gas Appliance Testing 10-1
10.2.1. General Applicability *10-1*
10.2.2. Applicability to Combustion Fuels other than IOU Natural Gas *10-1*
10.3 Natural Gas Appliance Testing Protocols 10-2
10.3.1. General Protocols *10-2*
10.3.2. Pre-Weatherization Evaluations of Gas Appliances *10-2*
10.3.3. Post-Weatherization Natural Gas Appliance Testing (NGAT) *10-3*
10.3.4. Ambient CO Testing of Natural Gas Appliances *10-4*
10.3.5. Disposition of Appliance Fails/Problems *10-4*
10.4 Timing of Combustion Appliance Testing 10-5
10.4.1. Homes with Natural Gas Appliances *10-5*
10.4.2. Homes for which Infiltration Reduction is Simulated *10-5*
10.5 Actions to be Taken When Appliances Fail NGAT 10-5
10.6 Personnel Performing Natural Gas Appliance Assessments and Testing 10-6
10.7 Nonfeasibility Criteria for Natural Gas Appliance Testing 10-6

1

Introduction

1.1. Overview

This *Program Year 2006 Statewide LIEE Policy and Procedures Manual* (*PY2006 P&P Manual*) describes the policies and procedures followed in the Low Income Energy Efficiency (LIEE) Programs administered by Pacific Gas & Electric Company (PG&E), Southern California Edison Company (SCE), Southern California Gas Company (SoCalGas), and San Diego Gas & Electric Company (SDG&E). This *PY2006 P&P Manual* is accompanied by two other documents with which all contractors working in these programs must comply:

- *California Conventional Home Weatherization Installation Standards*, which describes the materials and installation procedures that must be followed during the installation of measures in conventional homes; and
- *California Mobile Home Weatherization Installation Standards*, which describes the materials and installation procedures that must be followed during the installation of measures in mobile homes;

Copies of these documents (referred to hereafter as the Installation Standards, or the WIS Manuals) may be obtained from the individual utilities.

The policies and procedures in this *PY2006 P&P Manual* are supplemented by the general and specific terms and conditions incorporated into contracts between the utilities and their contract service providers as part of the LIEE Program.

Updates in Program policies and procedures may be issued by the utilities during the course of the 2006 Program Year. The operational interpretation of policies and procedures incorporated into this PY2006 Manual and the associated Installation Standards rests with the utilities' Program Managers. Changes in the means of implementing policies, procedures and standards will be discussed with contractors prior to being made.

1.2. Structure of this Manual

The remainder of this *PY2006 P&P Manual* is organized as follows:

- Section 2 specifies general statewide policies and procedures relating to customer and home eligibility for the LIEE Program.
- Section 3 discusses polices relating to customer outreach and customer relations.
- Section 4 describes the services that are provided under the LIEE Program in the initial home visit.
- Section 5 lists the energy efficiency measures that are available to participants in the PY2006 LIEE Program.
- Section 6 discusses policies relating to minor home repairs and furnace repairs and replacements.
- Section 7 describes polices and procedures relating to the installation of energy efficiency measures and the provision of minor home repairs in participating homes.
- Section 8 summarizes general statewide inspection polices and procedures.
- Section 9 discusses contractor eligibility.
- Section 10 describes policies and procedures relating to natural gas appliance testing.
- Appendix A provides a list of the cities comprising the CEC climate zones used in the determination of ceiling insulation levels and Program eligibility of other measures.

2

Customer and Structural Eligibility

2.1 Overview

This section discusses the eligibility of individual households for LIEE Program services. Eligibility of a household for measures offered through the Program depends on several factors, including:

- Household income;
- The utility services provided by the utility to the dwelling;
- The specific type of structure in which the household resides;
- The ability to obtain the approval of the landlord in the event the household resides in rental property;
- Previous LIEE Program services provided for the property in question; and
- The dwelling's need for energy efficiency measures offered through the Program.

These eligibility requirements are explained below.

2.2 Income Requirements

2.2.1. Income Guidelines

All the utilities use the LIEE income guidelines established by the California Public Utilities Commission ("CPUC" or "Commission") to qualify participants in the LIEE Program. These guidelines are provided to the utilities by the CPUC on an annual basis. There are two sets of income levels that define the income eligibility requirement. As established in D. 01-06-010,[1] the first set of the income levels applies if the applicant is 18 years or older, and no permanent household member is 60 years or older or disabled.[2] The second set of income levels applies if the applicant is 18 years or older and one or more permanent household members is either 60 years of age or older, or disabled. The CPUC updates the LIEE income

[1] See *Interim Opinion: Eligibility Criteria and Rate Discount Level for Low Assistance Programs*, D. 01-06-010, June 7, 2001.

[2] A disability must be a long-term condition in order for the household to qualify for the second tier guidelines.

guidelines every year for inflation. Table 2-1 presents these guidelines for the period of June 1, 2005 through May 31, 2006. This table will be updated annually prior to June 1.

Table 2-1: Income Guidelines (June 1, 2005 Through May 31, 2006)

Number of People Living in Household	If the applicant is 18 years or older, and NO permanent household member is 60 years or older or disabled, total household income before taxes cannot exceed:	If the applicant is 18 years or older and ONE OR MORE permanent household members is either 60 years of age or older, or disabled, total household income before taxes cannot exceed:
1	$24,200	$27,700
2	$24,200	$27,700
3	$28,400	$32,500
4	$34,200	$39,200
5	$40,000	$45,900
6	$45,800	$52,600
If greater than 6, add the following amount per person	$5,800	$6,700

2.2.2. Types of Income Included in Household Income

For the purposes of determining Program eligibility, all income is considered, from all household members, from all sources listed in Table 2-2, whether taxable or non-taxable income, including (but not limited to) wages, salaries, interest, dividends, child support, spousal support, disability or veteran's benefits, rental income, Social Security, pensions and all social welfare program benefits before any deductions are made. Table 2-2 indicates the specific items included as income for the purpose of determining eligibility for the LIEE Program.

The following types of receipts are *not* considered household income for the purposes of determining eligibility:

- Loan proceeds;
- Assets (money in bank accounts, a house, a car or other property of possessions);
- Funds transferred from one applicant account to another; or
- Liquidation of assets (other than the portion representing capital gains).

Table 2-2: Items Included in Income

Wages, salaries and commissions	401K payments or withdrawals[1]
Alimony payments	Rental income and royalties[2]
Child support payments	School grants, scholarships or other aid*
Disability benefits	Self-employment earnings[2]
Foster care payments	Social security payments
Realized capital gains on assets	Housing subsidies
Interest and dividends on assets	Supplemental Security Income (SSI) payments and State Supplemental Payments (SSPs)
Food stamps	Temporary Assistance to Needy Families (TANF) payments
Gambling/lottery winnings	Unemployment Benefits payments
General relief	Veterans Administration Benefit payments
Monetary gifts (both one-time and recurring)	Workers Compensation payments
Insurance settlements or legal settlements*	Union strike fund benefits
Pension payments or withdrawals*	

1 Other than loans.
2 For rental income and self-employment income, only positive values of income are included. Negative net rents and negative self-employment income are ignored.

2.2.3. Verification of Income

Income documentation must be reviewed, recorded, copied and retained by service providers prior to the installation of measures for all prospective participants. Qualification for other programs cannot be taken as adequate evidence of qualification for the LIEE Program, except in the case where the utility has verified that the customer is CARE-eligible within the past year. CARE self-certification does not automatically qualify a household for LIEE, except in the case of group homes, where it is specifically allowed.

The utility will periodically audit income documentation retained by the contractor. In the event that documentation is not complete and correct for a participant, payment to the contractor for the provision of Program services to that unit may be disallowed.

The kinds of income documentation required by the Program include but are not limited to those presented in 2-3. In applying these documentation requirements, the following stipulations must be observed:

- Current award letters must include the value of the award and the period of time in question. They must also be dated within one year of the customer's signature date and must list the customer's name.

- Affidavits relating to gifts must indicate the amount and frequency of the gift(s). They must also contain the name, phone number, address and signature of the giver.
- In determining rental income, it must be understood that a renter-landlord relationship exists between household members when a room or rooms in the home are being rented. Unless the renter is a dependent of someone in the household, the renter's income is not included in household income and the renter is not counted as a household member. The rental payments count as household income. In the event that the renter is a dependent of someone in the household, the renter's income is counted, the renter is considered as a household member, and the rental payment is not counted as part of household income. A dependent is anyone claimed on the applicant's income tax return.
- Federal income tax documentation must include copies of all 1099s and W-2 forms.
- Affidavits from an employer who pays the applicant cash wages must be on the employer's letterhead and include the company name, address and phone number. It must also include the name of the applicant, total amount paid to the applicant, and the frequency of payments, and must contain a signature from the employer's authorized representative.

Table 2-3: Types of Income Documentation

Type of Income	Documentation
Wages, salaries and commissions	Copy of customer's payroll check stub(s) OR Federal income tax filing showing gross income OR affidavit from employer (for cash wages only, and only where just one employer)
alimony or child support payments	Copy of check, bank statement, OR most recent court document stating amount
Disability benefits, foster care payments, Unemployment Benefits, VA Benefits, Workers Compensation	Copy of checks stubs OR copy of most recent award letter
CAPITAL gains	Federal Income Tax filing showing capital gains
Food stamps	Copy of most recent award letter OR food stamp/cash issuance letter (indicate TANF or General Relief)
Gambling/lottery winnings	determined on case-by-case basis
General relief	Copy of most recent award letter (Notice of Action) OR copy of uncashed check(s) OR copy of direct deposit statement(s)
Monetary gifts	Copy of customer's bank statement OR affidavit from gift giver
Proceeds from insurance settlements or legal settlements	Copy of settlement document
Interest and dividend income	Copy of customer's bank statement(s) OR copy of customer's investment statement(s) OR Federal Income Tax filing showing gross income
Pension or 401K payments or withdrawals	Copy of customer's check stubs OR copy of most recent award letter OR Form 1099R from prior year
Rental income [1]	Tax return (Form 1040, Schedule E, Total Rental Real Estate and Royalty Income or Loss) showing rental income OR copy of rental receipts OR copy of rental agreement specifying rent amount and affidavit from tenant
School grants, scholarships or other aid	Copy of award letter OR copies of cancelled checks
Self-employment earnings[1]	Income statement showing most recent quarterly adjusted earnings plus prior year's tax return (1040 Schedule C, Net Profit or Loss) OR written affidavit from an accountant or applicant
Housing subsidies	award letter
SSI payments, TANF payments, or Social Security payments	Copy of most recent award letter (Notice of Action) OR copy of uncashed check(s) OR copy of customer's direct deposit statement
Union strike fund benefits	Copy of benefits payment stub

[1] For rental income and self-employment income, only positive values of income are included. Negative net rents and negative self-employment income are ignored.

- If the applicant receives cash wages for jobs like mowing lawns, babysitting, handyman services, casual day labor, etc., a self-employment affidavit from the applicant is acceptable if it meets all Program criteria.
- In cases where a household claims no income for the past 12 months, the applicant must demonstrate his or her means of financial support other than income. In the event that the applicant cannot provide documentation of either income or other means of support, Program services will not be performed until such information is provided.

2.2.4. Household Income Calculation Procedures

Household income guidelines are based on gross *(pre-tax)* annual income. For self-employed individuals, gross (pre-tax) income is defined to be net profit or loss from self-employment. In the event that a full 12 months of income information is not available, or if there has been a change in the employment status of the household over the past 12 months, it may be necessary to annualize income from a shorter period of time. If, for instance, a household member has been employed for six months, the income earned over this period would be annualized by multiplying it by 2.

It is the intention of the LIEE Program for all outreach personnel to compute annual income as accurately as possible. The calculations used will depend on the type of records available from each household member. Since all household members may not have the same type of income records, it may be necessary, and appropriate, to use more than one method when documenting income for different members of the same household.

2.2.5. Determining Household Size

Household size is the current number of people living in the home as permanent residents. Friends or family on a temporary visit (less than 6 months) are not considered household members nor are their earnings part of household income.

Children and/or other dependents residing in the household *only* on weekends, holidays, or vacations may be counted as part of the household only if the family claims them as dependents on their federal income tax filing. Children by previous marriages who do not reside in the home cannot be considered household members, even if they are receiving child support, unless they are claimed as dependents on the applicant's federal income tax filing.

2.2.6. Qualifying Multifamily Complexes

The LIEE Program makes use of fractional income qualification for certain measures for multifamily complexes. The terms of income qualification are as follows:

- *For the purposes of determining income eligibility,* multifamily complexes are defined as those with five (5) or more dwelling units. Duplexes, triplexes, and

four-plexes will be qualified as single family homes for the purposes of determining income eligibility.

- In multi-family buildings, the following measures may be offered only to dwelling units occupied by income-qualified households: refrigerators, evaporative coolers, and high efficiency window-wall air conditioners.
- To qualify an entire multifamily building for other measures offered by the Program (defined as 80-20 measures), at least 80% of all (occupied and unoccupied) dwelling units must be occupied by income-qualified households. However, if at least 80% of all units adjacent to a common attic space satisfy the 80% rule, that attic space may be treated even if the 80% rule is not satisfied for the entire building. In the event that fewer than 80% of the dwelling units are occupied by income-qualified households, individual dwelling units occupied by qualifying households may still receive all feasible 80-20 measures.
- Service providers must review, copy and store income documentation for all households used to qualify an apartment building. The provider must also make its best effort to review and record income documentation for all other households in the multifamily building (i.e., those not used to meet the 80% qualification standard).
- Unoccupied and other non-qualified multifamily dwellings may be weatherized, as long as the multifamily building satisfies the 80% rule for income qualification.

2.3 Service Eligibility

2.3.1. General Service Eligibility Conditions

To be eligible for the LIEE Program, a customer must be served by an active utility account/meter. In an area served by different investor-owned gas and electric utilities (e.g., the SoCalGas-SCE overlap area) the fuel source for the dwelling's space heat shall determine which utility will be the primary provider of weatherization services to the dwelling as long as that fuels source is either natural gas or electricity. In the event that a non-IOU heating fuel is used *and* the home has air conditioning, the electric IOU will be the provider of weatherization measures other than infiltration-reduction measures.

The following measure-specific eligibility requirements will be observed in the LIEE Program.

- ***HVAC Measures.*** HVAC measures are all measures affecting heating and/or air conditioning usage in participating homes. HVAC measures can be divided into infiltration reduction measures and other HVAC measures. Infiltration-reduction measures include door weather-stripping, caulking, outlet gaskets, and evaporative cooler covers. Non infiltration reduction HVAC measures include ceiling insulation, high efficiency window/wall air conditioners, and evaporative coolers. Homes heated with a non-IOU fuel but which also take air-conditioning service

from an IOU are ineligible for infiltration reduction measures, but are eligible for non-infiltration reduction HVAC measures only.

- ***Electric Equipment Measures.*** Electric equipment measures include thread-in compact fluorescents, hard-wired compact fluorescent porch light fixtures (for single family non-mobile homes only), and refrigerator replacements. The utilities will continue to offer all other feasible LIEE electric equipment measures to homes with non-IOU space heating and/or water heating fuels.
- ***Water Heating Measures.*** Water heating measures include pipe wrap, faucet aerators, low-flow shower heads and water heater blankets. The utilities will not offer water heating measures to homes that heat water with non-IOU fuels.
- ***Minor Home Repairs.*** Minor home repairs include services intended to reduce infiltration, mitigate hazardous conditions, or accommodate the installation of other measures. Minor home repairs that reduce infiltration will not be provided to homes with non-IOU combustion fuels. However, the utilities will perform non-infiltration reduction minor home repairs in these homes. Subject to the provisions of Section 10 of this P&P Manual, furnace repair and replacements and water heater repairs and replacements may be made in owner-occupied homes when necessary to mitigate NGAT fails.[3] The utilities will not offer furnace repairs/replacements or water heater repairs/replacements to homes that use non-IOU combustion fuels because they are not authorized to repair or replace appliances using these fuels.

2.3.2. Referrals

In order to provide the maximum opportunity for eligible customers to receive all feasible measures, the four IOUs—PG&E, SCE, SoCalGas, and SDG&E—will set up a referral system with each other and with the local Department of Community Services and Development (DCSD) agencies.

In the event that a customer uses a space or water heating fuel provided by an entity other than an IOU, the utility will install measures for which the customer is eligible under the utility's program and refer the customer to local agencies funded by the California Department of Community Services and Development (DCSD) for Low-Income Home Energy Assistance Program (LIHEAP) eligible measures not installed under the LIEE Program. In order to implement this step, the utilities will work with DCSD and its local contractor agency network to set up a formal referral procedure.

[3] Note that NGAT fails are defined to include cases where appliances are non-operational, or where a furnace is absent and the household uses another gas appliance for space heating. Furnaces and water heaters may be serviced in non-owner-occupied homes to mitigate NGAT problems if servicing can be done at a minimal cost.

In the event that a customer lives in an area where one IOU utility provides one service (either natural gas or electricity) and another IOU provides the other fuel (either electricity or natural gas), and if one utility is not providing all measures, a referral system will also be used to give the customer the opportunity to receive all measures for which he/she is eligible under the LIEE Programs of the two utilities. If the electric utility contacts the household first, it will install measures for which the household is eligible under the electric utility's Program and refer the customer to the natural gas utility's program for measures relating to natural gas end uses. If the initial contact is made by the natural gas utility, this utility will install measures for which the customer is eligible under the utility's program and refer the customer to the electric utility's program for measures applicable to electric end uses. In both cases, the utility installing infiltration measures will conduct natural gas appliance testing as long as the utility serves natural gas somewhere in its service area (and thus has trained gas service representatives). In the event that the customer has electric space heat served by an electric-only utility, the electric utility will not install infiltration measures if natural gas appliances are present. However, in this case the electric utility will refer the home to the local DCSD agency(ies).

In order to mitigate the duplication of costs that could otherwise be associated with customers participating in two utility programs, two steps shall be taken:

- First, outreach staff in each program will accept customer income qualification documentation already obtained by outreach staff in the other program; and
- Second, gas and electric utilities will offer common energy education in overlap areas so that customers will need to receive education only under one program.

Additionally, the minimum measure requirement for eligibility (see Section 2.9) will not apply to homes referred by one IOU to another, if the first IOU establishes that a home meets this minimum for the combination of gas and electricity.

2.4 Treatment of Master-Metered Units

Customers whose service is covered by master meters may participate in the LIEE Program. For these customers, the following policies and procedures will apply:

- Deemed savings can be used in the evaluation of Program savings for master-metered units.
- Program personnel will explain the Program to the landlord or property manager prior to contacting tenants.

- If the master-metered dwellings are multifamily units, the terms of Section 2.2.6 will apply. Landlords must be informed that income documentation will be required for the purposes of determining eligibility.
- Utilities may set a maximum on the percentage of participants treated by a contractor in a program year that are master-metered. This percentage will generally reflect the predominance of master-metered dwellings in the service area, but will be no higher than 15%. Table 2-4 presents the limits on the treatment of master-metered units for the four service utility programs. Three of the utilities with relatively high proportions of low-income customers on either electric or gas master meters will impose caps of 15%. SCE, which has a relatively low percentage of low-income customers on master meters (primarily because master metering is less common on electric meters) will impose a cap of 8%.

Table 2-4: Caps on Master-Metered Dwellings

Characteristic	PG&E	SCE	SoCal Gas	SDG&E
Estimated percentage of low-income dwellings with electric master- meters	10.0%	8.0%	n/a	5.0%
Estimated percentage of low-income dwellings with natural gas master- meters	18.0%	n/a	16.0%	30.0%
Cap on master-metered dwellings as a percentage of total treated units	15.0%	8.0%	15.0%	15.0%

These caps will be implemented through limits placed in contracts with installation contractors.

2.5 Structural Eligibility

Public Housing. Public housing is eligible for participation in the LIEE Program, but must meet the program eligibility requirements in order to participate. (Note that this does not include on-base military housing, insofar as these dwelling units are not served by the investor-owned utilities.)

Housing Type. Single family homes, multifamily dwelling units, and mobile homes are eligible to participate in the program.[4] To preserve equity, the utilities have adopted a long-term goal of having the mix of dwellings treated under the Program reflect the residence type

[4] Multifamily dwellings are defined as those in buildings with five (5) or more dwelling units.

mix found in the low income communities served by their programs. The multifamily targets are cast in terms of units treated, and are set equal to the proportions of multifamily dwellings in the overall low-income housing stock of each utility's service area. Table 2-5 presents the targets for multifamily units in the four service areas.

Table 2-5: Long Term Targets for Treatment of Multifamily Dwellings

PG&E	SCE	SoCal Gas	SDG&E
23.1%	51.3%	32.8%	47.5%

There are, of course, several reasons why homes treated in a specific year may not reflect the dwelling type mix of low-income housing:

- Other programs may overlap the LIEE Program, and may affect the overall treatment of eligible units.
- The mix of homes treated in the past under individual utility programs may not represent the dwelling type mix of that utility, so current programs may be designed to bring total program treatment rates into alignment.
- It may make sense from a marketing and outreach standpoint to target certain residence types each year, with the expectation that equity would be achieved over time.

As a result, the utilities may promote or limit the treatment of multifamily units in individual program years as long as these actions are consistent with the achievement of these long-term goals.

Housing on Non-Residential Rates. In general, only residential customers on residential rates are eligible to participate in the LIEE Program. However, group homes on non-residential rates are eligible for LIEE services as long as they are currently eligible for CARE under current CARE guidelines applicable to group living facilities,[5] and the structure in question is a single family, multifamily or mobile home suitable for weatherization under LIEE standards.[6]

CARE-eligible facilities include but are not limited to the following.

---

[5] See D. 92-04-024, April 8, 1992; D. 92-06-060, June 17, 1992; D. 95-10-047, October 18, 1995. Also see *Commission Advisory and Compliance Division, Workshop Report on California Alternate Rates for Energy (CARE): The Development of Guidelines to Implement CARE for Migrant Farmworker Housing, Agricultural Employee Housing, and Employee Housing*, May 1995.

[6] It should be noted that CARE income eligibility requires that 100% of the residents of the facility (other than live-in staff) meet the CARE income guideline. This income eligibility criterion will be applied to group homes for the purposes of determining LIEE income eligibility.

- Migrant farmworker housing centers, as defined in Section 50710 of the Health and Safety Code, provided that 70% of all energy usage in master-metered facilities and 100% of all energy usage in individually-metered facilities is residential.
- Privately owned employee housing, as defined in Section 17008 of the Health and Safety Code, that is licensed and inspected by the state and local agencies pursuant to Part I of Division 13, and in which 100% of all energy use is residential.
- Housing for agricultural employees operated by non-profit entities, as defined in Subdivision (b) of Section 1140.4 of the Labor Code, and that has an exception from local property taxes pursuant to subdivision (g) of the Revenue and Taxation Code, provided that 70% of all energy usage in master-metered facilities and 100% of all energy usage in individually-metered facilities is residential.
- Non-profit group living facilities, defined as transitional housing (such as a drug rehabilitation or halfway house), short- or long-term care facilities (such as a hospice, nursing home, children's home or seniors' home), group homes for physically or mentally challenged persons, or other nonprofit group living facilities.
- Homeless shelters, hospices and women's shelters with the primary function of providing lodging and which are open for operation with at least six beds for a minimum of 180 days and/or nights (including satellite facilities in the name of the licensed corporation, where 70% of the energy supplied is for residential purposes).

As mandated by AB 868 and reiterated by an October 1, 2004 Administrative Law Judge's Ruling,[7] migrant housing centers are presumed to meet CARE income eligibility guidelines without verification. This presumption will also be used in determining LIEE income eligibility of such facilities. For the purpose of determining eligibility of other types of housing on non-residential rates, income qualification shall be considered satisfied if the facility is on CARE. These facilities represent a unique situation and this income verification procedure shall not be considered a precedent for other circumstances.

2.6 Home Ownership Documentation

2.6.1. Overview

Home ownership must be verified in order to ensure that the legal owner signs the Property Owner Waiver. It is the responsibility of the contractor to review the documents and ensure proof of home ownership. If a home is in the name of a deceased spouse, the surviving

[7] Administrative Law Judge's Ruling Seeking Input Regarding Assembly Bill 868 (Care Eligibility for Migrant Housing Centers), October 1, 2004.

spouse should be considered as the owner. For example, if the home is in the husband's name and never transferred to the widow, the widow is considered the current homeowner.

Any of the following may be used for home ownership documentation.

- Current loan or mortgage documents.
- Property tax records or bills.
- Home owner property insurance (fire insurance).
- Mortgage payment invoices or book.
- Data Quick or similar title search service.

2.6.2. Multiple Ownership

If the home is owned by more than one person, the homeowner will be considered any one of the persons whose name appears on the document.

2.6.3. Life Estate/Living Trust

A homeowner may have established a "Life Estate" or "Living Trust." With either, the property is deeded to another individual or trust but the original owner maintains control of the property. The original owner may sign as the property owner only if he or she has a copy of Life Estate or Living Trust documents. A copy of the Life Estate or Living Trust documents must be maintained in the customer's file.

2.6.4. Power of Attorney (POA)

In cases where the property owner is not available to sign on the Agreement, any person having a Power of Attorney (POA) for that owner may sign the Agreement. A copy of the POA must be maintained in the customer's file.

2.6.5. Property Management Companies

Authorized representatives of property management companies may sign for property owners for both single family and multifamily agreements under either of the following conditions: the property management company has a standard Power of Attorney agreement with the property owner; or the property management company has a signed Management Agreement with the owner authorizing the property management company to act as the agent for the specific property. A copy of the Power of Attorney or the Management Agreement must be kept in the customer's files for that customer.

2.7 Treatment of Rental Units

2.7.1. Property Owner Approval

Rental units may not be treated until a written Property Owner Waiver has been received. This approval must cover the participation of the unit in the Program as well as the installation of specific measures. Such approval is valid for a period of 12 months from the date it is provided by the property owner. If approval of the legal owner is not received prior to the installation of measures, the Contractor will be required to reimburse the utility for all payments received from the utility for treating the unit(s) in question.

2.7.2. Eligibility of Rental Units for Certain Measures

Assuming that the permission of the property owner has been approved and that other eligibility conditions are met, rental units may be treated under the Program. However, the following policies relating to specific measures shall be applied.

- Rental units are eligible for evaporative coolers, air conditioners, refrigerators and hard-wired fixtures, to the extent that these measures continue to be provided under the LIEE Program.
- Rental units are not eligible for furnace replacements or major furnace repairs associated with the mitigation of NGAT fails. However, minor repairs and adjustments may be made to furnaces if these actions would improve the performance of the system at a minimal cost.
- Rental units are not eligible for water heater repairs and replacements associated with the mitigation of NGAT fails. However, services and adjustments may be made to water heaters if these actions would improve the performance of the system at a minimal cost.
- Evaporative coolers and hard-wired fixtures will be provided without charge to either the tenant or the landlord. Refrigerator and air conditioner replacements will also be provided at no charge to either the tenant or the landlord, except in the instance where the landlord owns the refrigerator or air conditioning unit that is replaced and also pays the utility bill. In these instances, the utilities may make payments to installation contractors that cover only part of the cost of replacement.

2.8 Previous Program Participation

In order to provide services to the widest range of low-income households possible, the utilities place certain restrictions on the participation of homes that have previously been treated under the LIEE Program. These restrictions are as follows.

- If utilities pre-screen customer lists before providing them to service providers, utilities may target homes that have not yet participated in the LIEE Program.

- In general, homes that have participated in the LIEE Program within the past 10 years are not eligible for services in the current program.[8] However, the following exceptions to this policy will be made. First, a home that has been treated under the LIEE program during the past 10 years will be considered eligible for ceiling insulation if the home needs this measure, and if ceiling insulation was previously deemed non-feasible for any reason other than customer refusal (e.g., knob and tube wiring) that has since been resolved or is no longer considered to result in non-feasibility. Second, a home that has received infiltration-reduction measures, and has not received a furnace replacement through the program, will be revisited if the customer calls the utility to report a malfunction of the furnace and the utility determines a hazardous condition exists[9]. Such homes will be eligible only for furnace repairs or replacement on the second visit. Third, a home that is currently income eligible, has been treated under the LIEE program, but has not received a refrigerator in the past 10 years, will be considered eligible to receive a refrigerator. Fourth, any unit that previously failed to pass a combustion appliance safety pre-test or a pre-weatherization NGAT assessment, and therefore did not receive infiltration-related measures, shall be considered eligible for the measures it did not receive if the test is subsequently passed during the 10-year window. In all four situations identified above, the home will be eligible for only those services listed under this exceptions policy.
- Another exception to the 10-year rule will be granted on a temporary basis in the SCE service area. Due to the fact that SCE's LIEE services were previously offered under a variety of programs rather than a single comprehensive program, and given that changes in eligible measures have recently occurred, participants in the SCE service area between 1997 and 2005 will be eligible to receive two measures in certain climate zones: central air conditioners in Climate Zones 14 and 15; and window/wall air conditioners in Climate Zone 10. These temporary exceptions relating to the SCE Program will be dropped after the 2008 Program Year.

2.9 Need for LIEE Services

A home must need a minimum number of Program services in order to be eligible for participation in the Program. For all homes meeting the minimum number of necessary measures, all feasible measures must be installed.

The following eligibility conditions shall be applied.

---

8 As indicated in Section 2.9, the provision of CFLs and/or energy education does not constitute program participation in the context of this statement.

9 A hazardous condition shall be defined as any condition that in the normal course of business, a utility gas service person/energy tech would routinely shut off and/or cap the subject appliance prior to leaving the customer's home because it was not repairable within the utility's normal scope of work.

- In an area served by an investor-owned combined gas and electric utility (e.g., an area in which SDG&E or PG&E serves both electricity and natural gas) or an electric-only utility (SCE), the minimum would be either ceiling insulation, window/wall air conditioning, evaporative cooling, refrigerator replacement, or three other measures.[10]
- In an area served by an investor-owned gas utility but not an investor-owned electric utility, the minimum would be either ceiling insulation or three other measures that are covered under the gas utility's LIEE Program.
- In an area served by multiple investor-owned gas and electric utilities (e.g., the SCE-SoCalGas overlap area), the minimum number of measures will be defined as if the home were served by a combined gas and electric utility, and the utilities will use a referral system to ensure the installation of all feasible measures.

However, electric utility or dual fuel outreach/education personnel will install up to five (5) CFLs at the time of the assessment of the home. The provision of CFLs does not constitute program participation from the standpoint of determining future Program eligibility. That is, it does not restart the 10-year clock used to determine Program eligibility. However, the utilities will track the installation of CFLs in homes receiving only CFLs and will not pay for the installation of additional CFLs in these homes within a period of seven years.

For all homes meeting the minimum for necessary measures, all feasible measures must be installed.[11] As stipulated in the standard non-feasibility criteria, if a measure is already in place and operating properly, even if it does not meet the current Installation Standards for new installations, it should not be removed and replaced.

[10] For the purposes of determining the number of measures needed, all minor home repairs (combined) will count as a single measure.

[11] If a customer refuses a measure, that measure is considered non-feasible. See Section 7.

3

Customer Outreach and Customer Relations

3.1 Introduction

This section presents statewide LIEE policies and procedures in the areas of customer outreach and customer relations. Subsection 3.2 discusses policies relating to the recruitment of participants for the Program, while Subsection 3.3 focuses on the maintenance of proper relationships with customers. It should be understood that the policies in this section are supplemented by additional provisions in both specific and general terms and conditions included in formal agreements between utilities and contractors.

3.2 Customer Outreach

Contractors recruiting customers for participation in the LIEE Program are required to follow strict policies relating to customer outreach. Customer outreach policies cover promotional guidelines, limitations on representations made by contractors and their employees, outreach interactions, and tracking.

3.2.1. Promotional Guidelines

Only promotional materials approved by the Utility Program Manager may be used to promote participation in the LIEE Program.

3.2.2. Representations by Contractor and Contractor's Employees

Neither the contractor nor his/her employees may imply that they are employees of the Utility or affiliated with the Utility in any way other than through the LIEE Program.

3.2.3. Outreach Interaction

Outreach personnel must effectively contact and interact with a diverse set of customers. These personnel shall have available any necessary multilingual staff and/or translators.

3.3 Customer Relations

3.3.1. Introduction

It is imperative that both contractors and utility employees maintain proper customer relationships. The LIEE Program is a customer service program, and should be delivered accordingly. Specific polices with respect to customer relations are specified below.

3.3.2. Expedient Service

Service must be provided to participants in a reasonable time frame, as determined by the utility. Crews must inform customers of the approximate amount of time required for installations, inspections and gas appliance testing (if required), and shall provide services as expeditiously as possible.

3.3.3. Other Work

Only three types of work for participating customers may be billed to the LIEE Program: energy education, the installation of eligible measures, and the provision of eligible minor home repairs. The contractor is prohibited from selling other services to the customer or charging the customer for any other service.[1]

3.3.4. Staff Identification

All contractor or subcontractor employees who engage in customer contact must wear identification badges provided or approved by the utility at all times. Each badge must include a color photo of the employee. If the contractor produces badges, templates for identification badges will be provided by the utility. The contractor shall immediately return or destroy the ID badges of all personnel no longer working for the contractor or its subcontractors on the LIEE Program. In the event that the contractor destroys the badges, the contractor shall notify the Program Administrator in a timely fashion.

3.3.5. Crew Appearance

LIEE contractors are responsible for the courtesy and appearance of their employees. Discourteous personnel and unprofessional appearance will not be tolerated in this program and may constitute grounds for contract termination.

3.3.6. Clients 18 Years or Older

In general, contractors shall enter clients' residences only when adults, eighteen (18) years of age or older are present. The only exception to this rule is that contractors may enter the

[1] Note that this provision does not preclude the possibility of requiring a co-payment for the installation of one or more measures, if approved by the utility.

home of a customer under eighteen (18) years of age if the customer is married or has been declared an emancipated minor by the courts.

3.3.7. Customer Complaint Procedures

The contractor must make every effort to resolve customer complaints. The Contractor must notify the utility or its designee of the status of each complaint within 24 hours of the contractor's receipt of the complaint. If the complaint deals with customer safety, the contractor must resolve it within 24 hours. If the complaint does not relate to customer safety, the contractor must resolve the complaint to the satisfaction of the customer within 10 days of the receipt of the complaint. The acceptability of the contractor's resolution of complaints will be determined at the sole discretion of the utility. If the contractor has not resolved the complaint within the mandated period, the contractor shall notify the utility or its designee of this failure.

3.3.8. Substance Abuse and Smoking Policy

While at the customer sites, contractor personnel shall not be under the influence of drugs or alcohol nor be using drugs or alcohol when on the job. Smoking is prohibited within the residence being served at all times and on the customer's property without the customer's approval.

3.3.9. Incident Report

Contractors must immediately contact the utility or its designee if during a home visit there is damage to a customer's home and/or property or if the contractor's employee has been accused of an illegal act. Within 24 hours, the contractor will inform the utility or its designee of the resolutions of all such incidents.

4

Procedures for Pre-Installation Contacts

4.1 Introduction

This section describes the procedures to be followed by outreach workers and contractors during pre-installation visit or visits to a participating home. These procedures cover the provision of general program information, the collection of data on the household and the home, the administration of home energy education, the completion of the home energy audit, and the installation of CFLs.

4.2 Description of Program Services

In the course of the initial home visit, the outreach worker shall provide a thorough description of the program services available to the low-income household. At a minimum, this description must cover the following services:

- The LIEE Program, including program goals, eligibility requirements, eligible measures, and procedures. The procedures to be covered by this description must encompass energy education, available energy efficiency services and minor home repairs, general installation procedures, inspection procedures, and natural gas appliance testing procedures (if applicable).
- Other programs designed to repair/replace furnaces or install other energy efficiency measures (if these are offered as separate programs).
- The California Alternate Rates for Energy (CARE) Program. Outreach workers will also provide assistance in enrolling the customer in CARE if the customer chooses to participate in it.
- Other utility programs designed to provide services to low-income customers, including level-payment programs, medical baseline programs, and other energy efficiency programs for which the customer may be qualified.
- Similar programs offered by DCSD and other known energy related programs.

The outreach worker may also describe government programs like the Internal Revenue Service's earned income tax and the State of California's Healthy Families Program. At no time shall Program personnel promote or provide fee-based services to income-qualified applicants in lieu of free services offered under the LIEE Program.

4.3 Data Collection

During the initial interview, the outreach worker will also collect data needed to document eligibility and to meet tracking and reporting requirements. In general, information on the following factors must be collected:

- Name, address and phone number of applicant,
- Age and disability status of applicant or other permanent household member,
- Residence type and dwelling status,
- Referral information,
- Gas and/or electric account information,
- Appliance/HVAC system information, and
- Home square footage.

Demographic data may also be collected if offered by the customer.

4.4 In-Home Energy Education

In-home energy education will be provided to all income-eligible applicants whose dwellings require the minimum number of measures, using forms and checklists provided by the utilities. Energy education will cover five general areas: heating and cooling usage, water heating system usage, major electric and gas appliance usage, small appliance usage, and lighting usage. Topics to be covered in the course of energy education must include:

- The general levels of usage associated with specific end uses and appliances,
- The impacts on usage of individual energy efficiency measures offered through the LIEE Program or other Programs offered to low-income customers by the utility,
- Practices that diminish the savings from individual energy efficiency measures, as well as the potential cost of such practices,
- Ways of decreasing usage through changes in practices,
- Information on CARE, the Medical Baseline Program, and other available programs,
- Appliance safety information,
- The way to read a utility bill, and
- The procedures used to conduct natural gas appliance testing (if applicable).

4.5 In-Home Energy Assessment

An assessment of the structure will be completed on homes with income-qualifying applicants using a form provided by the utility. The assessment will identify measures to be installed through the Program. The presence of natural gas appliances will be determined. Assessment forms will be provided by the utility or approved by the utility if the contractor has an acceptable in-house form.

4.6 Installation of Compact Fluorescent Light Bulbs

The electric or dual-fuel utility outreach worker will install compact fluorescent light bulbs during the initial home visit. The number of compact fluorescent light bulbs installed will depend on unit type, feasibility and amount of time each lighting fixture is used (3.5 hours minimum); however, no more than five (5) bulbs may be installed in a home. Leaving compact fluorescent light bulbs with customers for installation at a later time is not allowed.

4.7 Other Responsibilities

Income documentation must be collected and property owner approval must be obtained prior to the installation of Program measures. These requirements are discussed in Section 2.

5

Program Measures for PY 2006

5.1 Introduction

This section identifies the energy efficiency measures available through the PY2006 LIEE Program and discusses the means by which changes in eligible measures are made over time. Subsection 5.2 focuses on measures offered under the PY2006 program, while Subsection 5.3 outlines the process that will be used to evaluate measures for inclusion in the Program in future years.

5.1. Program Measures for 2006

Table 5-1 indicates the specific Program measures that are eligible for the LIEE Program for PY 2006. Note that there are some restrictions on the eligibility of individual homes for some of these measures. See Section 7.

5.2. Consideration of Changes to Measure List

Utilities will jointly evaluate existing Program measures in the course of developing recommendations for subsequent year programs. The utilities evaluate these measures using all available information on both costs and benefits (including energy benefits as well as non-energy benefits), and develop a set of recommendations for CPUC approval. If warranted by the evidence, these recommendations may vary across climate zones. The utilities will also implement a process for considering new measures to be added to the Program. This process will entail the issuance of a solicitation for recommendations for new measures and the assessment of the cost-effectiveness of these measures.

Table 5-1: Eligible Measures for 2006

Measure	Eligibility
Ceiling Insulation	All Climate Zones and Residence Types
Low Flow Showerheads	All Climate Zones and Residence Types
Water Heater Insulation	All Climate Zones and Residence Types
Weather-Stripping Doors	All Climate Zones and Residence Types
Caulking	All Climate Zones and Residence Types
Outlet Cover Plate Gaskets	All Climate Zones and Residence Types
Faucet Aerators	All Climate Zones and Residence Types
Water Heater Pipe Insulation	All Climate Zones and Residence Types
Evaporative Coolers	Climate zones 10-16 only; single family and mobile homes only
Refrigerator Replacements	All Climate Zones and Residence Types
Evaporative Cooler and Air Conditioner Vent Covers	All Climate Zones and Residence Types
Hard-Wired Compact Fluorescent Lamp Porch Light Fixtures	All climate Zones, but Single Family Homes only
Thread-Based Compact Fluorescent Lamps	All climate Zones and Residence Types
High Efficiency Window/Wall Air Conditioners	Climate Zones 10-15 only
High Efficiency Central Air Conditioners	Climate Zones 14 and 15 only
Duct Testing and Sealing	All Climate Zones for Single Family and Mobile Homes with gas space heating; Only Climate Zones 10-16 for homes with electric space heating
Minor Home Repairs[1]	All Climate Zones and Residence Types

[1] There are multiple submeasures included under minor home repairs. Minor home repairs are constituted by services that either reduce infiltration (e.g., window repairs), mitigate a hazardous condition, or accommodate the installation of Program measures (e.g., attic venting). Furnace repairs and replacements and water heater repairs and replacements fall under the category of minor home repairs, and are provided only when necessary to mitigate NGAT fails and pursuant to the installation of infiltration-reduction measures. For the purposes of qualifying a home for the Program, all minor home repairs (combined) count as a single measure.

6

Minor Home Repairs

6.1 Introduction

This section describes the LIEE policies and procedures relating to minor home repairs. Section 6.2 discusses the specific minor home repairs provided through the LIEE Program. Section 6.3 describes Program limits on expenditures on general types of minor home repairs. Finally, Section 6.4 describes the prioritization criteria that will be used by Program Managers to prioritize repairs for a specific home when not all needed minor home repairs can be made within the constraints of the budget limits for that home.

6.2 Minor Home Repairs

Minor home repairs are repairs required to enable installation of weatherization measures, to reduce infiltration, or to mitigate a hazardous condition.

In *owner-occupied* homes receiving infiltration-reduction measures, minor home repairs include furnace repair or replacement and water heater repair or replacement, when necessary to mitigate natural gas appliance testing (NGAT) fails that cannot be corrected with service by utility gas service personnel (or their designated representative). Such NGAT fails may include, but are not limited to, CO above the action level, inadequate draft, unsafe flue/vent pipe/system, unacceptable flame or flame change when air handler comes on, a non-operable appliance, or the absence of a furnace in cases where another gas appliance is used for space heating.

In *all* homes receiving infiltration-reduction measures, minor home repairs also include other corrections needed to pass the NGAT protocol, including but not limited to, adding combustion and ventilation air (CVA) venting, and other corrections listed in Table 6-8. It is the general policy of the LIEE Program that these repairs must be made if they are needed and feasible, subject to budgetary limits. Table 6-1 through Table 6-8 present the minor home repairs that are provided under the LIEE Program. Table 6-1 lists general structural repairs. Table 6-2 enumerates repairs required to mitigate catastrophic envelope leaks. Table 6-3 lists repairs necessary to support the installation of ceiling insulation. Table 6-4 lists repairs required to support weather-stripping and caulking. Table 6-5 indicates repairs required to install attic ventilation. Table 6-6 lists repairs required to support the installation

of water heating measures. Finally, Table 6-7 enumerates repairs made to mitigate non-appliance hazards. Finally, Table 6-8 indicates repairs required to mitigate natural gas appliance fails.

Table 6-1: General Repairs

Small holes in interior surface of wall between conditioned and unconditioned Space ▪ Repair holes 1" in diameter or smaller ▪ Repair holes between 1" and 6"	**Windows** ▪ Replace glazing compound ▪ Replace glass ▪ Replace sash[1] ▪ Repair or replace mullions/muntins[1] ▪ Install new window (not just glass)[1] ▪ Install casing
Exterior wall ▪ Patch stucco (up to 36 sq. in.) ▪ Replace missing siding	

Table 6-2: Repairs Required to Mitigate Catastrophic Envelope Leaks

Large holes in interior surface of wall between conditioned and unconditioned Space[2,3] ▪ Repair large portion of drywall or plaster (up to 4 sq. ft.). ▪ Replace entire drywall or wood panels (up to 8 sq. ft.).	**Windows and Doors** ▪ Replace entire window[1] ▪ Replace entire door[1]

[1] Replaced only with Program Manager's approval on a case-by-case basis.

[2] Structural/framing members not included.

[3] Surface left in a prepared-for-paint condition.

Table 6-3: Repairs Required to Support Installation of Ceiling Insulation

Attic access ▪ Install weather-stripping ▪ Repair access panel ▪ Replace molding around access ▪ Cut new access hole/opening (interior only and only between joists)	**Retractable ladder** ▪ Install cover ▪ Install frame and cover ▪ Weather-strip opening **Repair holes in ceiling**
Reconnect Duct **Seal Return Plenum** **Closet vent/ceiling** ▪ Cover vent with flexible insulation ▪ Install solid material to cover opening	**Exhaust vent** ▪ Repair/replace bath vent pipe ▪ Repair/replace kitchen vent pipe

Table 6-4: Repairs Required to Support Weather-stripping and Caulking

Door Replacement ▪ Install door stops ▪ Replace door ▪ Replace door jamb ▪ Plane bottom of door ▪ Cut off bottom of door ▪ Replace interior casing ▪ Replace exterior casing ▪ Replace complete pre-hung door unit ▪ Adjust hinges ▪ Replace hinges ▪ Adjust loose screws ▪ Replace lock ▪ Replace existing night latch	**Door Replacement (cont.)** ▪ Install/adjust striker plate ▪ Repair/replace subseal[4] **Threshold Repairs/Replacement** ▪ Install new threshold ▪ Seal threshold ▪ Install riser **Caulking Preparation** ▪ Install backer rod ▪ Clean surface of dirt and oils

[4] Subseal is directly under the riser which is directly under the threshold.

Table 6-5: Repairs Required to Install Attic Ventilation

Gable vent ▪ Install new vent ▪ Replace screen ▪ Repair existing wooden vent	**Eave/soffit vent** ▪ Clean screen ▪ Replace screen ▪ Install new vent
Turbine/dormer vent ▪ Install new vent ▪ Repair existing vent	

Table 6-6: Repairs Required to Install Water Heating Measures

▪ Install combustion air vent ▪ Install showerhead adapter

Table 6-7: Repairs Required to Mitigate Non-Appliance Hazards

▪ Replace broken/cracked switch/outlet covers ▪ Remove combustible and flammable materials from combustion air vent proper clearance zone.

Table 6-8: Repairs Required to Mitigate Natural Gas Appliance Fails

All Appliances ▪ Repair gas leaks ▪ Replace soldered gas connector	**Cooking Appliances** ▪ Correct mobile home kitchen exhaust defect.
Furnaces ▪ Correct CVA deficiency ▪ Clear covered CVA vent opening/ screen ▪ (Owner-Occupied) Repair or Replacement for non-op or NGAT Fail not correctable by Service	**Water Heaters** ▪ Correct CVA deficiency ▪ Extend vent pipe if termination is too close to evaporative cooler ▪ Clear covered CVA vent opening/ screen ▪ (Owner-Occupied) Repair or Replacement for non-op or NGAT Fail not correctable by Service

6.3 Limits on Minor Home Repairs

There are two types of limits on costs incurred for minor home repairs, including furnace repairs and replacements, water heater repairs and replacements, and other minor home repairs.

- ***Average Cost Limits.*** These are limits on the average cost of categories of service across all homes receiving the service in question. They are designed to provide overall cost control for the provision of these services.
- ***Individual Home Limits.*** These are defined as limits on the cost that can be incurred for an individual home without the specific approval of the utility Program Manager. Individual home limits are meant to provide for equity in the distribution of program funds across individual households but yet provide Program Managers enough flexibility to respond to individual customer needs and hardship situations.

These limits are presented in Table 6-9. It should be noted that the expenditure limits apply to all minor home repairs, including any actions taken to respond to gas leak/carbon monoxide emission problems identified during the utility's gas appliance testing procedures.

Table 6-9: Caps on Minor Home Repairs

Service	Average Cost per Home Receiving Service	Maximum Cost for Individual Home
Furnace Replacements Central Furnaces Wall/Floor/Direct Vent Furnaces	-	 $2,000[1] $1,500
Water Heater Repairs and Replacements (Total Combined Cost for home receiving one or the other)	$900	$1,250
Other Minor Home Repairs	$300	$750
Furnace Repairs (restriction on repair expenditures relative to cost of replacement) Central Furnaces Wall/Floor/Direct Vent Furnaces	-	 50%[1] 25%
Total of All Minor Home Repairs	-	$2,500

1 Does not include the costs of Title 24 compliance.

6.4 Prioritization of Minor Home Repairs

In the event that a contractor requests permission from the utility Program Manager to exceed the limit on minor home repairs, the Program Manager will base a decision on the status of the Contractor's minor home repair budget, the overall program budget, and the need for the repairs in question. If the Program Manager deems it necessary to limit expenditures on the home, measures will be prioritized using the following general priority list:

- Repairs needed to mitigate immediate hazards (e.g., repairs made to mitigate natural gas appliance testing (NGAT) fails, or door repairs where doors will not close or lock),
- Repairs needed to mitigate major infiltration sources (e.g., broken windows, holes in doors, etc.),
- Repairs required to permit the installation of a measure, and
- Other repairs.

7

Measure Installation Policies and Procedures

7.1 Introduction

This section presents LIEE policies for Program measures that are covered in the LIEE WIS Manual. Subsection 7.2 specifies general policies that apply to all measures, including contractor installation, installation standards, safety, site clean up, and other policies. Subsection 7.3 identifies non-feasibility criteria and other policies applicable to individual measures and minor home repairs. These measure-specific policies are also listed in the LIEE WIS Manual.

7.2 General Installation Policies

7.2.1. Introduction

Several general policies relating to the installation of Program measures must be followed by installation personnel. These policies are presented below.

7.2.2. Installation by Contractor

Measures must be installed by the contractor. Dropping off materials for later installation by the customer is not permitted under this Program.

7.2.3. Installation Standards

All measures must be installed in conformance with the California LIEE Installation Standards, as prescribed by two documents: *California Conventional Home Weatherization Installation Standards* and *California Mobile Home Weatherization Installation Standards.* These standards are intended to meet or exceed existing codes and regulations, and to conform to accepted building practices. When a conflict exists between these installation standards and local codes, the more stringent requirement shall take precedence. Copies of these installation standards manuals may be obtained by using the contact information provided in Section 1.3.

7.2.4. Safety

Contractors must plan and conduct all work in a manner that is consistent with the safety of persons and property. All work shall be conducted in compliance with reasonable and safe working practices and with applicable federal, state, and local laws. For instance, the Contractor is responsible for complete compliance with California Occupational Safety and Health Standards.

It is the responsibility of each program contractor to establish and maintain a safety program for all work undertaken for the LIEE Program. It is also the responsibility of each contractor to ensure that all employees observe safety rules by complying with all required safety precautions and regulations. Contractors must ensure that their staff members receive appropriate training in the safe and proper use of the tools associated with the installation of each LIEE Program measure.

7.2.5. Installation of Feasible Measures

It is the policy of the CPUC that LIEE Program Contractors must install all feasible measures unless they are specifically refused by the participating household. If the installer determines that a measure cannot be installed, the reason shall be recorded and made available to the utility or its designee.

7.2.6. Lead-Safe Practices

Lead-safe practices shall be employed when working with pre-1979 painted materials per Title 8 of the California Code of Regulations, Section 1532.1, and Title 17 of the California Code of Regulations, Section 36000, et seq.

7.2.7. Site Clean-Up Policies

The Contractor must maintain all work sites and related structures, equipment and facilities in a clean, orderly condition during all work conducted under the LIEE Program. Any unused or leftover materials, garbage and debris must be promptly removed from the customer's premises by the Contractor and disposed of at the Contractor's expense. The customer's premises must be left in a clean and orderly condition at the end of each day and at the completion of work.

7.2.8. Weatherization of Mobile Homes

Mobile homes with open combustion furnaces or water heaters drawing air from inside the conditioned space may not have infiltration reduction measures installed under the LIEE Program. In addition, ceiling insulation (and therefore attic duct reconnection) is not a measure for mobile homes.

7.3 Measure-Specific Policies

7.3.1. Introduction

This section describes Statewide LIEE policies and procedures that are specific to the installation of specific measures and minor home repairs. Two kinds of policies and procedures are covered: 1) non-feasibility criteria and 2) other policies and procedures. Non-feasibility criteria formalize conditions under which measures *may not* be installed in specific homes. In general, non-feasibility conditions refer to cases where a specific measure:

- Is present,
- Is refused by the customer,
- Cannot be physically installed,
- Cannot be installed without risk to the household or the contractor, or
- Is prohibited by code or Program policy.

Other policies and procedures are those policies which typically tell when, where, and under what circumstances a measure can be installed. Policies related to billing practices are excluded from this list, but may be covered by utility contracts with installation contractors.

Non-feasibility criteria and other policies and procedures are presented for the following LIEE Program measures and specific minor home repairs (MHRs):

- Caulking
- Weather Stripping Doors
- Ceiling Insulation
- Water Heater Insulation
- Water Heater Pipe Insulation
- Cover Plate Gaskets
- Energy Saver Showerheads
- Faucet Aerators
- Evaporative Cooler and Air Conditioner Vent Covers
- High Efficiency Window/Wall air conditioners
- High Efficiency Central Air Conditioners
- Exterior Door Replacement (MHR)
- Window Replacement (MHR)
- Glass Replacement (MHR)
- Thread-Based Compact Fluorescent Lamps
- Hard-Wired Compact Fluorescent Lamp Porch Light Fixtures
- Evaporative Cooler Installation
- Furnace Repair/Replacement (MHR)
- Water Heater Repair/Replacement (MHR)
- Refrigerator Replacement
- Duct Testing and Sealing[1]

[1] Duct testing and sealing is offered as a distinct measures, as well as a means of complying with Title 24 when alterations are made to the participating home. Different policies apply to these two applications.

7.3.2. Caulking

Non-Feasibility Criteria. Caulking shall not be applied:

- If the existing caulking is functioning properly, even if not installed in accordance with current Installation Standards,
- To cracks that do not penetrate the building envelope,
- To cracks that are too wide to be caulked (wider than 5/8") and must be repaired/patched, or
- If customer refuses caulking.

Other Policies. Three other policies relate to caulking.

- For homes with lapped siding, caulk shall be applied in standard locations such as door thresholds, door stops, and gaps between different materials, etc. However, seams between lapped siding must not be caulked.
- When exterior caulking is required above the first story, it shall be applied whenever the area requiring caulking is readily accessible.
- For mobile homes, caulking should be applied to the interior only.

7.3.3. Weather Stripping Doors

Non-Feasibility Criteria. Weather stripping shall not be applied:

- If the existing weather stripping is functioning properly, even if not installed in accordance with current Installation Standards,
- If the door is located between two conditioned or two unconditioned spaces,
- To doors in multi-unit dwellings that separate the living space from heated hallway,
- To doors and/or frames with a fire rating greater than 20 minutes,
- When a functional storm door is present, or
- If the customer refuses installation of weather stripping.

Weather stripping shall not be applied to appliance closet doors when:

- The combustion appliance receives air from conditioned space (i.e. combustion air grills are present in the enclosure door or wall), or

- Inadequate combustion air (as defined in the installation standards) is being supplied to the appliance.[2, 3]

Other Policies. Additional weather stripping policies include the following.

- The contractor may adjust existing weather stripping in lieu of replacement only if existing weather stripping is functional and creates a proper seal.
- Door shoe and threshold combinations must be installed unless proven to be non-feasible.
- A threshold should not be installed which exceeds 1" in height from the finished floor (1/2" in height for handicapped).
- When the installation of a door shoe and threshold combination is not feasible for the following reasons, an automatic sweep may be used:
  - Medical reasons, such as wheelchairs or walkers, require that the floor be as flat as possible,
  - Metal doors cannot be cut to accommodate a shoe,
  - Doors open outward and do not overlap a floor surface when closed. "Bumper" type thresholds may be used in this circumstance if a tripping hazard will not be created,
  - Finished floor is ceramic tile (100% seal at grout lines is not required),
  - The installation of a proper threshold requires carpet cutting or repair to wooden or concrete sills, and
  - The door is unusually expensive and might be aesthetically damaged by cutting.
- A stationary sweep can be used in lieu of an automatic sweep if a door shoe and threshold combination is not feasible and an automatic sweep cannot be installed.
- The use of flip up sweeps is not allowed.

---

2 This restriction covers two situations: when existing vents are inadequate, and when adequate vents cannot be added as a minor home repair.

3 See the NGAT section of the Weatherization Installation Standards Manual.

7.3.4. Ceiling Insulation

Non-Feasibility Criteria Directly Related to Ceiling Insulation. Ceiling insulation shall not be installed if any of the following criteria is applicable.

- In accordance with Table 7-1, the existing insulation level precludes raising the R value.
- The roof is leaky or shows signs of water damage from leaks that have not been repaired.
- Adequate venting is not present and cannot be installed per installation standard attic ventilation guidelines.[4]
- Hazardous electrical wiring or other hazardous conditions are present.
- An enclosed cavity as defined in the installation standards is present.
- Exhaust vents terminating in the attic cannot be vented to the outside.[5]
- Disconnected or damaged space heating / cooling ducts are present and cannot be repaired.
- Attics having limited accessibility, as indicated when:
  - An inspector cannot gain safe physical access to all treated areas of the attic,
  - Clearance between top of ceiling joist and bottom of ridge board is less than 24 inches,
  - Structural obstructions, such as cross-members of truss systems, provide an opening of less than 18 inches, or
  - Access requires crawling over/under HVAC ducts, and clearance is less than 18 inches.
- The structure is unsound and will not support the weight of the insulation and installer.
- Knob-and-Tube (K&T) Wiring is present and:
  - Functioning knob-and-tube wiring cannot be certified safe by a C-10 contractor.
  - Abandoned K&T wiring is present that cannot be disconnected and certified as abandoned by a C-10 contractor.
  - Insulation over K&T wiring (live or abandoned) is prohibited by local codes.
- The customer refuses installation of ceiling insulation.

---

4 An appendix to the Weatherization Installation Standards Manual addresses all aspects of vent area determination.

5 This covers two situations that are covered as minor home repairs: Reconnecting exhaust vents and/or addition of exterior venting as covered in the WIS manual.

Ceiling Insulation Levels. The level of insulation to be installed varies across CEC climate zones and existing insulation levels, as shown in Table 7-1.

Table 7-1: Ceiling Insulation Additions

Climate Zone	Existing Insulation Level	Action
CEC Climate Zones 2 - 15	R-11 or less	Raise R-Value to R-30
	More than R-11	Do not install additional insulation
CEC Climate Zones 1 and 16	R-19 or less	Raise R-Value to R-38
	More than R-19	Do not install additional insulation

The actions listed in the third column of Table 7-1 refer to the final level of insulation, including any pre-existing values as well as insulation added under the program. These levels apply on a forward-looking basis; homes previously receiving lower levels of ceiling insulation under the LIEE program will not be revisited to bring insulation up to the new higher level.

Figure 7-1 depicts the sixteen CEC Climate Zones. Climate Zones 1 and 16 have heating degree-days in excess of 5,000. Appendix A contains a list of the locations contained in each CEC Climate Zone.

Figure 7-1: CEC Climate Zones

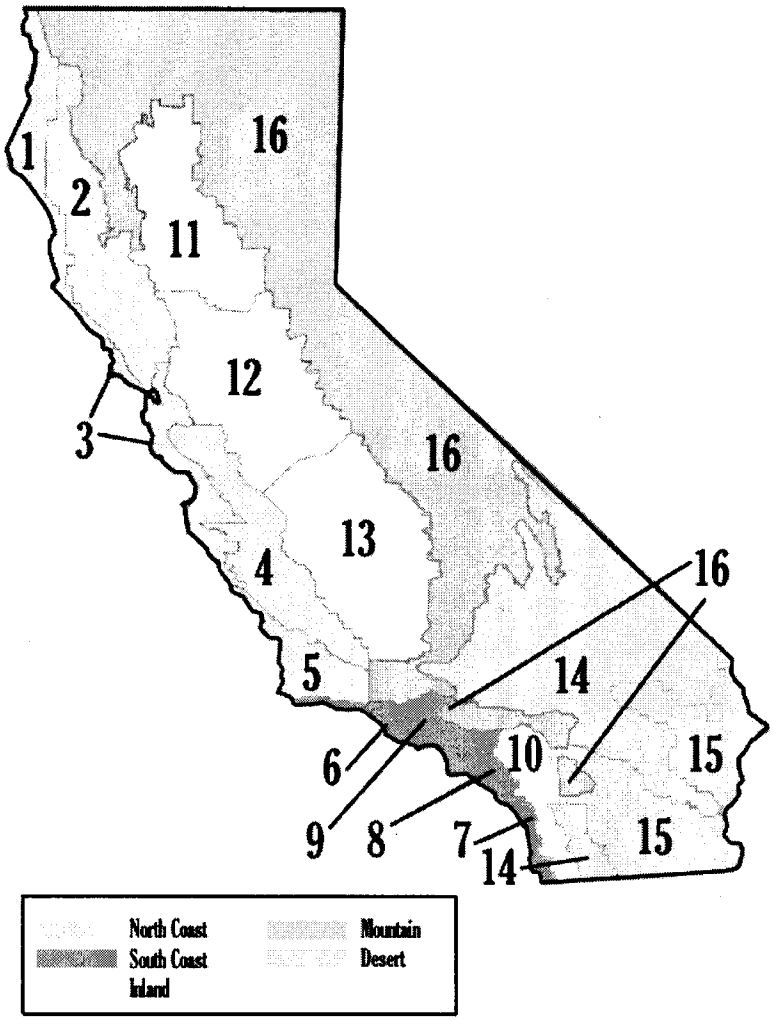

Other Policies Directly Related to Ceiling Insulation. The other key policies that directly apply to ceiling insulation include the following.

- In cases where local jurisdiction mandates more insulation than required by the LIEE Program, contractors may install higher levels only after forwarding documentation of the more stringent requirements to and obtaining written authorization from the LIEE Program Manager.

- When no attic access exists, contractors will install one prior to installing ceiling insulation. Minimum dimensions of the new opening shall be 30" x 22" or as required by local code.
- If the gable vent is used for attic access, it must be hinged and large enough (18" x 18" minimum) to provide access for the inspector.
- In the event holes are observed in attic firewalls while performing attic insulation, the prime contractor will document and notify the property owner of the existing condition.
- There is no minimum attic square footage required for ceiling insulation.
- Homes having (a) separate attics, or (b) contiguous attics consisting of different sections with various crawl clearances shall have insulation installed only in the sections which have the clearances specified above.
- Before insulation is installed, duct leaks shall be sealed, disconnections shall be reconnected, and needed duct repairs shall be made in accordance with the Duct Sealing Standards section of the Weatherization Installation Standards Manual.

Non-Feasibility Criteria Relating to Attic Ventilation. Attic Ventilation shall not be installed if:

- The existing venting already meets installation standards,
- Tiled hip roof without overhang, soffit, or accessible frieze blocks,
- Ceiling insulation is non-feasible,
- Roof-mounted vents are the only option for adding venting, but the roof is tile, wood shingles, or in poor condition (e.g. more than three layers of roofing, roof unable to support additional vents),
- The roof is a flat and/or built-up roof as defined in the installation standards, or
- The customer refuses installation of additional vents.

Other Policies Relating to Attic Ventilation. There are no other policies that apply to attic ventilation.

7.3.5. Water Heater Blankets

Non-Feasibility Criteria. A water heater blanket shall not be installed on <u>any</u> water heater if:

- The existing blanket is functioning properly, even if not installed in accordance with current Installation Standards,
- External insulation is specifically prohibited by the manufacturer,

- A T&P relief valve, or gas shutoff valve, is not present, or is not located within 6" of the tank,
- The T&P valve outlet is plugged or capped,
- The tank is exposed to the weather,
- A leak in the tank or water pipes is present,
- Plastic piping (e.g., CPVC) is present in the cold or hot water lines to/from the tank,
- The tank is located within 12" of a stove, range, or cook top,
- The water heater tank capacity is greater than 100 gallons, or
- The customer refuses installation of a water heater blanket.

A water heater blanket shall not be installed on a gas water heater if any of the following criteria are applicable.

- A gas leak is present.[6]
- The vent pipe and/or draft hood is not properly installed including:[8]
  - No draft hood is present,
  - Two draft hoods are present, or
  - The vent pipe is defective or missing.
- There is evidence of improper combustion and/or venting as characterized by: [8]
  - Large accumulation of soot near the draft hood or on the floor underneath, or
  - Scorching at the draft hood or combustion chamber.
- There is no appliance line (gas shut-off) valve present.
- The combustion air supply is improper or inadequate according to installation standards[7] as characterized by: [8]
  - The absence of both low and high vents (when required),
  - Vent size is too small,
  - Room volume is inadequate, or
  - The customer refuses modifications needed to create adequate combustion air supply.
- Both burner access doors are missing.[8]
- Internal insulation is R-12 or greater.
- Perimeter clearance prior to blanket installation is less than 4" between tank and door, and less than 1" on sides and back.

---

6 When these conditions exist, installers must contact the designated utility personnel.

7 See the NGAT section of the Weatherization Installation Standards Manual.

A water heater blanket shall not be installed on an electric water heater if any of the following criteria are applicable.

- Hazardous electrical wiring/conditions are present.
- The thermostat cover plate(s) not present.
- Internal insulation is R-16 or greater.
- Perimeter clearance prior to blanket installation is less than 1" on the front, sides, and back.

Other Policies. Only water heaters supplying hot water to residential units receiving other program measures are eligible to receive water heater blankets.

7.3.6. Water Heater Pipe Insulation

Non-Feasibility Criteria. Water heater pipe insulation shall not be installed if:

- The existing pipe insulation is functioning properly, even if not installed in accordance with current Installation Standards,
- Leak is present in tank or water pipes,
- An unsafe condition is present that causes tank insulation to be nonfeasible.
- The water heater pipes are exposed to the elements (especially sunlight, which can quickly degrade the insulation),
- Less than 1 foot of continuous insulation can be installed,
- Plastic piping (e.g., CPVC) is present in the cold or hot water lines to/from the tank,
- Pipes are inaccessible or the configuration prevents proper installation, or
- The customer refuses installation of water heater pipe insulation.

Other Policies. There are no other policies relating to pipe insulation.

7.3.7. Cover Plate Gaskets

Non-Feasibility Criteria. Cover plate gaskets shall not be installed if any of the following criteria are applicable.

- There is evidence of electrical malfunction or hazard, such as:
  - Electrical box not permanently attached,
  - Loose electrical connection,
  - Signs of burning or charring or other evidence of hazardous wiring condition, or

  - In a mobile home, aluminum wiring is present.
- Gaskets are already present, even if not installed in accordance with current Installation Standards.
- The cover plate is located on a wall between two conditioned or two unconditioned areas.
- The cover plate is located behind furniture or major appliances that are too fragile or heavy to move.
- Removal of the cover plate will damage the wall surface (paint, wallpaper, etc.).
- The utility box is an odd size and standard gaskets will not work.
- The customer refuses installation of cover plate gaskets.

Other Policies. The following other policies apply to cover plate gaskets.

- All broken, cracked, or missing cover plates shall be replaced.
- All gaskets must be contractor-installed. No gaskets are to be left behind for customer installation.

7.3.8. Energy-Saver Showerheads

Non-Feasibility Criteria. Energy-saver (i.e. low-flow) showerheads shall not be installed if the following criteria are applicable.

- The existing showerhead(s):
  - Have a flow rate less than or equal to 3.0 gpm be functioning properly, even if not installed in accordance with current installation standards, or
  - Are required for medical reasons.
- The existing shower arm:
  - Is made of plastic (including ball joint, i.e., for Price Pfister®),
  - Is cracked, broken, or missing, or
  - Requires removal.
- The shower is not mechanically functional.
- Standard metal adapters (i.e. American Standard®, Gerber®, and Price Pfister®) will not work.
- Piping is in such poor condition that showerhead installation could cause plumbing problems.
- The customer refuses installation of low flow showerheads.

Other Policies. The following other policies apply to energy-saver (low-flow) showerheads.

- All existing showerheads with a flow rate greater than 3 gpm flow and not required for medical reasons shall be replaced with low-flow showerheads.
- Replaced showerheads may be left with the customer or the property manager only if requested.

7.3.9. Faucet Aerators[8]

Non-Feasibility Criteria. Faucet aerators may not be installed if:

- Aerators are already present and functioning properly, even if not installed in accordance with current Installation Standards,
- The faucet has a special fitting for attaching an appliance (e.g., portable dishwasher),
- The faucet does not provide hot water,
- The faucet or faucet threads are found to be damaged and/or leaky,
- Removal of the existing aerator is likely to cause damage to the aerator or the faucet,
- Standard aerators will not fit, or
- The customer refuses installation of faucet aerators.

Other Policies. There are no other policies with respect to faucet aerators.

7.3.10. Evaporative Cooler and Window/Wall Air Conditioner Vent Covers

Non-Feasibility Criteria for Evaporative Cooler Covers. Evaporative cooler covers shall not be installed if:

- An existing evaporative cooler vent cover is functioning properly, even if not installed in accordance with current Installation Standards,
- The vent(s) serving the evaporative cooler is (are) shared with a heating system,
- The evaporative cooler is ducted with multiple supply vents/registers, and it is impossible to equip all of them with covers,
- Water damage to the ceiling or wall area around the vent register is evident, prevents proper cover installation, and cannot be repaired,
- The vent/register opening is so close to the wall or ceiling that proper installation of the cover is impossible,
- Electrical wiring/plug/receptacle interferes with proper installation, and furring is not a feasible option,

---

8 Faucet aerators are integrated into the energy-saver showerheads section of the WIS manual.

- An external cover is already present, or
- The customer refuses installation of evaporative cooler vent covers.

Non-Feasibility Criteria for Wall and Window Air Conditioner Unit Covers. Air conditioner covers shall not be installed if:

- An existing air conditioner vent cover is functioning properly, even if not installed in accordance with current Installation Standards,
- Water damage to the window or wall area around the unit/vent is evident, prevents proper cover installation, and cannot be repaired,
- The vent/unit is so close to the wall that proper installation of the cover is impossible, or
- The customer refuses installation of air conditioner vent covers.

Other Policies. The following other policies apply to evaporative cooler and window/wall air conditioner covers.

- A shop-built wooden vent cover can be used only when a commercially manufactured cover is not available.
- Each cover must be checked for proper fit. Removal and reinstallation must be demonstrated to the customer.
- In the cooling season when the cooler or window/wall air conditioner is in use, the Contractor can leave the cover uninstalled after the initial installation and customer instruction.

7.3.11. Exterior Door Replacements

Non-Feasibility Criteria. An exterior door shall not be replaced if:

- The door can be repaired rather than replaced,
- The door is structurally sound and provides an adequate barrier to infiltration,
- Door jamb is not structurally sound and cannot be repaired or replaced within the Minor Home Repair cap, or
- The customer refuses door replacement.

Other Policies. There are no other policies relating to door replacement.

7.3.12. Window Replacements

Non-Feasibility Criteria. An exterior window shall not be replaced if:

- The window can be repaired rather than replaced,
- The window is structurally sound and provides an adequate barrier to infiltration,
- The window is located above the first floor of a structure and installation will present unsafe working conditions,
- In mobile homes, window replacement will require removal of siding, OR
- The customer refuses door/window replacement.

Other Policies. All window replacements require written pre-approval from the LIEE Program Manager.

7.3.13. Glass Replacement

Non-Feasibility Criteria. Window glass shall not be replaced if:

- A small hole, ¼" or less, is present and can be patched with clear silicone or clear glass repair tape,
- There is only one crack less than 6" long, extending from edge to edge, that can not come loose from the frame to pose a safety hazard,
- The complete window will be replaced, or
- The customer refuses glass replacement.

Other Policies. The following other policies apply to glass replacement.

- When only one pane in a dual pane window is cracked, the unit does not require repair/replacement. If one pane of a dual-pane window is broken, all shards must be removed.
- Polycarbonate glazing is allowed only with written pre-approval from the LIEE Program Manager.

7.3.14. Thread-Based Compact Fluorescent Lamps (CFLs)

Non-Feasibility Criteria. A thread-based CFL shall not be installed:

- In a socket/fixture that is nonfunctional,
- In a fixture that already has a functional CFL,
- If hazardous conditions exist at the socket/fixture,
- In a circuit that is controlled by a solid-state timer,
- In a circuit that is controlled by a dimmer that is not compatible with available CFLs,
- In a fixture located in a storage room, closet, or multifamily common area,

- In any fixture that is not operable by the customer (i.e., on their electric meter/bill), or
- If the customer refuses installation of CFLs.

Other Policies. A maximum of five CFLs may be installed at any home.

7.3.15. Hard-Wired Compact Fluorescent Lamp Porch Light Fixtures

Non-Feasibility Criteria. A hard-wired CFL porch light fixture shall not be installed:

- If the existing location of the fixture is not suitable,
- If a thread-based CFL will fit in the existing fixture,
- In an electrical box that is substandard and/or cannot be properly secured,
- Where wiring is substandard, in a deteriorated condition, and/or rewiring is necessary,
- In a circuit that does not operate properly (e.g., defective switch),
- In a circuit that is controlled by a solid-state timer,
- In a circuit that is controlled by a dimmer that is not compatible with available hard-wired CFL fixtures,
- Existing fixture is in a wet location, and a grounding conductor is not available,
- If the existing fixture is not on the customer's electric meter/bill, or
- If the customer refuses installation of CFL fixture(s).

Other Policies. There are three other policies relating to hard-wired CFL porch light fixtures:

- Hard-wired CFL porch light fixtures may be installed only in single family non-mobile homes,
- No more than an average of three fixtures may be installed, and
- Replaced porch light fixtures may be left with the customer or the property manager only if requested.

7.3.16. Window/Wall Evaporative Cooler Installation

Non-Feasibility Criteria for Wall/Window Evaporative Coolers. A wall/window evaporative cooler shall not be installed if:

- The customer has an operational evaporative cooler,
- Proper electrical service is not present,

- Substandard wiring exists (e.g., ungrounded outlets or decayed insulation and/or exposed wires),
- Proper exhaust ventilation is not present,
- No feasible window or wall location is available,
- Exterior clearance requirements cannot be met,
- Egress requirements cannot be met,
- Wood windows are decayed or deteriorated,
- Siding is decayed or damaged, or
- The customer refuses installation of the evaporative cooler.

Other Policies. There are three other policies for this measure:

- Customer must have an operational refrigerated air conditioning unit,
- For single family homes and mobile homes, evaporative coolers are available only in CEC Climate Zones 10-16, and
- Evaporative coolers may not be installed in multi-family homes.

7.3.17. Furnace Repair and Replacement

Non-Feasibility Criteria for All Furnaces. A furnace shall not be repaired or replaced if:

- The property is renter-occupied,
- Fuel used by the existing unit is not supplied by the utility providing LIEE Program services,
- The existing furnace is inaccessible,
- Ducts cannot be brought into compliance with the Duct Sealing Section of the WIS Manual.
- No furnace is present and no natural gas line or electric outlet is available to accommodate the installation of a furnace,
- The customer refuses furnace repair or replacement,

Non-Feasibility Criteria for (Central/Ducted) Furnaces in Conventional Homes. A central furnace in a conventional home shall not be repaired or replaced if:

- For roof-mounted units, the roof is not structurally adequate to support the installation,
- Adequate access and/or combustion air cannot be provided, or

- Disconnected or damaged space heating ducts are present and cannot be repaired.

Non-Feasibility Criteria for (Central/Ducted) Furnaces in Mobile Homes. A central furnace in a mobile home shall not be repaired or replaced if:

- Required furnace drawing combustion air from outdoors, and/or furnace components or flue system that are listed and labeled for manufactured home installation, cannot be obtained,
- Adequate access and/or combustion air cannot be provided,
- Depressurization by the forced air unit's non-ducted return system adversely affects an open combustion appliance, and correction is not feasible,
- Disconnected ducts or catastrophic leaks are present and cannot reasonably be repaired, or
- A leaky belly-cavity or roof-cavity return exists and a central return system will not be installed.

Non-Feasibility Criteria for Wall/Floor (Non-Ducted) Furnaces. A wall or floor furnace shall not be repaired or replaced if:

- Adequate access and/or combustion air cannot be provided, or
- Existing open combustion appliance is in a location prohibited by the replacement unit instructions or local code, and relocation to an approved location is not feasible.

Non-Feasibility Criteria for Installation or Repairs Requiring Attic or Crawl Space Access. In the event that attic or crawl space access is required for the installation or repair of wall/floor furnaces, the installation or repair of a furnace will be considered nonfeasible if:

- Attic clearance is less than 24" between the top of ceiling joists and the bottom of the ridge board, or
- Crawl space clearance is less than 18" from the ground to the bottom of the floor joist system, or
- Any of the following conditions is present in the crawl space area where access is required: hazardous insect infestation; excessive ground moisture (standing water or mud); or sewage waste on ground or other unsanitary conditions posing a health and safety hazard.

Non-Feasibility Criteria for Central Air Conditioner Replacement. Central air conditioner replacement as part of furnace replacement is non-feasible if:

- The heating system can be repaired with the existing refrigeration equipment intact,
- For roof-mounted units, the roof is not structurally adequate to support the installation,
- Electrical service requirements cannot be met,
- Split system line set is inadequate, or
- System airflow is inadequate.
- In mobile homes, a leaky belly-cavity or roof-cavity return exists, and a central return system will not be installed.

Non-Feasibility Criteria for the Installation of Programmable/Setback Thermostats. Programmable/Setback Thermostats shall not be installed if:

- The furnace is not being replaced or repaired,
- The furnace is being repaired, and a properly functioning thermostat is present,
- A programmable/setback thermostat is already present and operational.
- The measure is refused by the customer.

Non-Feasibility Criteria for HVAC Air Filters. HVAC unit air filters shall not be replaced if:

- A serviceable filter is already present,
- The furnace will not be repaired,
- The types of filters provided by the program are specifically prohibited by the appliance manufacturer,
- Filter replacement would require removal of a flue, duct, or pipe, or
- The proper filter support or retaining device is not present and installation is not feasible.

Other Policies. The following other policies apply to furnace repairs and replacements.

- Furnace repair or replacement may be provided only when the appliance fails NGAT, and correction cannot be achieved with Service/Adjustment[9] by utility gas service personnel (or their designated representative).[10]

---

[9] Service/Adjustment of an appliance entails providing services that are within the scope of the gas service department for customers in general.

[10] Note that NGAT fails include cases where a furnace is non-operable, or where no furnace is present in the case where another gas appliance is used for space heating.

- Furnace replacements and major furnace repairs may be provided only if the residence is owner-occupied. Service/Adjustment may also be conducted in renter-occupied homes.
- A furnace will not be replaced if Title 24 provisions relating to alternations cannot be satisfied.
- A furnace that is not abandoned or inaccessible and that cannot be made operable through servicing, fails the NGAT.
- Furnace repairs and replacements will be provided only if the fuel used by the furnace is supplied by the utility providing LIEE Program services.
- Furnace replacement will not include hazardous material abatement, major structural alteration, concrete work, painting, or floor covering.
- A central furnace may be repaired only if the cost of repairing the unit would be less than 50% of the cost of replacement. A wall, floor or direct vent furnace may be repaired only if the cost of repairing the unit would be less than 25% of the cost of replacement.
- An air conditioning unit may be replaced in conjunction with a furnace replacement if:
  - the unit being replaced is a combined forced air heating and central AC package system, also referred to as a dual-pack (i.e. the AC and furnace is manufactured as one unit and is housed in a single sheet metal housing); or
  - the furnace being replaced is part of a split forced air heating and AC system and the AC evaporative coil and/or the outside system cannot be matched with the new furnace. However, AC replacement must not require refrigerant line replacement.
- Replaced units must be de-manufactured in compliance with all laws and regulations.
- Installer must have a C-20 license.
- A programmable thermostat may be installed only if (a) a central furnace or central air conditioner is replaced (a programmable thermostat is required by Title 24 when a central heating system and/or a central air conditioner is replaced), or (b) a central furnace or central air conditioner is repaired and a properly-functioning thermostat is not present.
- Prior to installation, contractors installing programmable thermostats shall explain the operation of these thermostats and provide the customer an opportunity to refuse the measure.
- Thermostats may be moved to resolve short cycling problems in mobile homes.
- HVAC filters may be replaced only as part of central furnace repair or central air conditioner replacement.

- Contractors who replace filters must show customers how to remove, clean and re-install the filters.

7.3.18. Natural Gas Water Heater Repair or Replacement

Non-Feasibility Criteria for Natural Gas Water Heater Replacement. A natural gas water heater shall not be replaced if:

- The property is renter-occupied,
- Fuel used by the existing unit is not supplied by the utility providing LIEE Program services,
- The existing water heater is inaccessible,
- The drain line for the T&P valve or drain pan cannot be properly terminated outdoors or to an approved indoor drain if required by local code, or a gas shutoff valve and pressure relief valve cannot be installed in lieu of a T&P valve and drain line,
- Required access, clearance or combustion air cannot be provided,
- Structure/floor cannot properly and safely support the installation,
- No suitable mounting locations for seismic bracing are available,
- A safety hazard is present which cannot be repaired (e.g., vent system defect, nonconforming gas piping),
- A watertight pan cannot be installed under the unit when required,
- A plumbing condition exists which prevents achieving satisfactory water pipe connections,
- A whole house fan is present, the existing water heater is in the attic, and a closed combustion unit cannot be installed,
- The unit is a central water heater serving more than one unit, or
- The customer refuses water heater replacement.

Non-Feasibility Criteria for Natural Gas Water Heater Repair. A natural gas water heater shall not be repaired if:

- The property is renter-occupied,
- Fuel used by the existing unit is not supplied by the utility providing LIEE Program services,
- The existing water heater is inaccessible,
- Proper combustion air cannot be provided,
- A safety hazard is present which cannot be repaired,

- The unit is a central water heater serving more than one unit, or
- The customer refuses water heater repair.

Other Policies. The following other policies apply to water heater repairs and replacements:

- Water heater repair or replacement may be provided only when the appliance fails NGAT, and correction cannot be achieved with Service/ Adjustment by utility gas service personnel (or their designated representative).[11]
- Water heater replacements and major repairs may be provided only if the residence is owner-occupied. Service/Adjustment may also be conducted in renter-occupied homes.
- Water heater repairs and replacements will be provided only if the fuel used by the appliance is supplied by the utility providing LIEE Program services.
- Water heater replacement will not include hazardous material abatement, major structural alteration, concrete work, painting, or floor covering.
- A water heater may be repaired only if the cost of repairing the unit would be less than 50% of the cost of replacement.

7.3.19. Refrigerator Replacement

Non-Feasibility Criteria. Refrigerators shall not be replaced if:

- Any refrigerator to be removed was manufactured after 1992,
- The electrical outlet used by the existing refrigerator is not properly grounded and cannot be properly grounded,
- Floor is not level and cannot safely support a new refrigerator,
- The refrigerator is not accessible for removal (e.g., doors from room are too small, refrigerator is encased in tile),
- Hazardous electrical conditions exist at the outlet used by the existing refrigerator, or
- The customer refuses refrigerator replacement.

Other Policies. Other policies that apply to refrigerator replacement include the following.

- The minimum size for primary refrigerators replaced under the LIEE Program is 10 cubic feet.

[11] A water heater will be considered to fail the NGAT if it has a leaky tank.

- One of the refrigerators replaced under the Program must be a primary refrigerator. The primary refrigerator is the main refrigerator in the home, usually the kitchen refrigerator.
- The size of the replacement refrigerator shall be approximately equal to the size of the existing unit. When two refrigerators and/or freezers are exchanged for a single unit, the replacement unit may not be larger than the combined size of the two existing units, and may not be larger than 23 cubic feet.
- Space must be physically large enough to accommodate the new refrigerator, with entrance and passageways sufficient to allow removal of the existing refrigerator.
- Contractor shall dispose and recycle (de-manufacture) replaced refrigerators in an environmentally safe manner and in accordance with federal, state, and local regulations and codes. Contractor represents that it has knowledge of the Metal Discard Act, effective January 1, 1994, which prohibits disposal of refrigerators/freezers in landfills.

7.3.20. High Efficiency Window/Wall Air Conditioner

Non-feasibility Criteria. High efficiency window/wall air conditioners shall not be installed:

- If the air conditioner to be replaced is operational and is less than 15 years old..
- If electric service requirements cannot be met.
- If a structurally sound mounting platform and/or suitable mounting location is not available.
- If the measure is refused by the customer.

Other Policies. The following other policies apply to this measure:

- High efficiency window/wall air conditioners may be installed only in CEC Climate Zones 10-15 (see Appendix A for a list of cities comprising these Climate Zones).
- Replacement unit must have a minimum EER of 10.7.
- Replaced units must be de-manufactured in compliance with all laws and regulations.
- All units must be adequately supported and braced.

7.3.21. High Efficiency Central Air Conditioners

Non-feasibility Criteria. The replacement of high efficiency air conditioners will be considered non-feasible if:

- The existing air conditioner is not operational.

- The central AC has a SEER greater than 9.0.
- The property is renter-occupied,
- Existing system is a combined HVAC unit and the unit has not passed the pre-weatherization NGAT,
- For a roof-mounted unit, the roof is not structurally adequate to support the installation,
- Electrical service requirements cannot be met,
- Ducts cannot be brought into compliance with the Duct Sealing Section of the WIS Manual.
- Existing HVAC unit is a combined fuel unit and the gas is not provided by one of the IOUs,
- Duct system is inadequate,
- Split system refrigerant line set is inadequate, or
- Customer refuses.

The unit is a mobile home, and either of the following conditions is present:

- Depressurization by the FAU non-ducted return system adversely affects an open combustion appliance, and correction is not feasible, or
- Abandonment of a leaky belly-cavity or roof-cavity return is required but not feasible.

In the event that the replacement of the central air conditioning system requires attic or crawl space access, replacement will be considered non-feasible if:

- Attic crawl clearances do not meet required minimums:
  - Clearance between top of ceiling joist and bottom of ridge board is less than 24 inches, or
  - Access requires crawling over/under HVAC ducts, and clearance is less than 18 inches.
- Crawl space clearance is less than 18" from the ground to the bottom of the floor joist system,
- There is hazardous insect or pest infestation,
- There is excessive ground moisture (standing water or mud),
- There is sewage waste on the ground or other unsanitary conditions posing a health and safety hazard.

Non-feasibility Criteria for Programmable/Setback Thermostats. Programmable /Setback Thermostats shall not be installed:

- If a programmable/setback thermostat is already present and operational.
- If the measure is refused by the customer.

Other Policies. The following other policies will apply to central air conditioner replacements:

- Central air conditioner replacements will be offered only in Title 24 climate zones 14 and 15.
- A programmable/setback thermostat may be installed only if a central air conditioner is replaced (a programmable thermostat is required by Title 24 when a central air conditioning system is replaced).
- Prior to installation, contractors installing programmable thermostats shall explain the operation of these thermostats and provide the customer an opportunity to refuse the measure.
- Thermostats may be moved to resolve short cycling problems in mobile homes.
- HVAC filters may be replaced only as part of central furnace repair or central air conditioner replacement.
- Contractors who replace filters must show customers how to remove, clean and re-install the filters.
- Replacement of refrigerant line sets is beyond the scope of this Program.

7.3.22. Duct Testing and Sealing as a Program Measure

Non-feasibility Criteria for Duct Testing as a Program Measure. Duct testing as a program measure will be considered non-feasible if:

- Ductwork contains excessive damage or deterioration that would preclude proper testing,
- If the replacement of 40 or more feet of duct in unconditioned space would be necessary,
- Ductwork contains or is made of asbestos,
- Ductwork is insulated or sealed with asbestos,
- Ductwork is inaccessible or an unsafe condition exists, causing duct testing to be unfeasible,
- A hazardous condition exists requiring repair or replacement per NGAT policy, and repair/replacement is not feasible,
- Forced air heating unit is inoperative and cannot be repaired,
- Forced air heating unit is abandoned or inaccessible, or

- The customer refuses.

Non-feasibility Criteria for Duct Sealing as a Program Measure. Duct sealing as a program measure will be considered non-feasible if:

- Duct leakage is below the threshold leakage per the Duct Testing and Sealing Form,
- Replacement of 40 or more feet of duct in unconditioned space would be necessary,
- A natural gas appliance hazard exists, and repair is not feasible,
- Duct system has been abandoned,
- Duct system is damaged and deteriorated beyond repair,
- A health or safety hazard is present, such as insect infestation, hazardous electrical wiring, or structural hazard, which prevents safe access to the duct system,
- Ducts and/or components are made of or insulated with asbestos,
- Access to the duct system does not meet minimum accessibility criteria specified in the Program Policy & Procedures Manual,
- For ducts in the crawl space: sewage waste is on the ground, or excessive ground moisture (standing water or mud) is present,
- Forced air heating unit is inoperative and cannot be repaired,
- Forced air heating unit is abandoned or inaccessible, or
- Customer refuses.

Other Policies. The following other policies will apply to duct testing and sealing when conducted as a free-standing measure:

- Duct testing and sealing as a measure will be offered only in Single Family and Mobile Homes,
- Duct testing and sealing as a measure will be offered in all Climate Zones for Homes with Natural Gas Space Heating provided by the IOU,
- For homes with electric space heat provided by the IOU, duct testing and sealing as a measure will be offered only in Climate Zones 10-16,
- Duct sealing is not required unless initial leakage is at least 28% of airflow.
- In order to be considered as a Program measure, potential duct leakage reduction must be at least 13% of total fan flow.
- For a duct system to be considered sealed, (a) the duct leakage reduction must equal or exceed 13% of airflow; (b) the final duct leakage must be reduced to less than 15% of airflow, or, if this cannot be reached, all accessible duct leaks must be sealed as verified by smoke tests.

- The utility or its designee will verify initial and final duct leakage rates, in accordance with the procedures in the Duct Testing Standards of the WIS Manual.

7.3.23. Duct Testing and Sealing as a Means of Title 24 Compliance

Non-feasibility Criteria. Since Title 24 is a state law, there are no Program non-feasibility criteria. When required by Title 24, duct testing and sealing must conform to all provisions of Title 24 (applicable to conventional homes but not mobile homes).

Other Policies. The provision of duct testing and sealing as a means of Title 24 compliance will be governed by the following other policies:

- Beginning October 1, 2005, when "alterations" are made to HVAC systems in conventional homes located in climate zones 2 & 9-16, the following requirements for duct testing and duct sealing apply:
  1) HVAC Contractors must:
     a) Ensure that duct leakage is at an acceptable level—which involves duct testing and, as needed, duct sealing, <u>or</u>
     b) Utilize a Title 24 High Efficiency Alternative in lieu of duct testing and sealing.
  2) When duct testing and sealing is performed:
     a) All accessible ducts must be sealed by the HVAC Contractor, and
     b) A minimum of 1 in 7 of each contractor's completed installations must be verified by a HERS Rater to be in compliance with Title 24 Standards.
  3) <u>*Exceptions*</u>: Duct testing and sealing requirements do <u>not</u> apply when:
     a) Total length of ducts located in unconditioned space is less than 40 linear feet.
     b) Ducts are constructed, insulated, or sealed with asbestos.
     c.) Ducts have been previously verified by a HERS rate to be incompliance with Title 24.
- HERS verification of duct testing and sealing is tied to the building permit process. Under Title 24, a building permit for an HVAC alteration cannot be finalized until a form CF-6R has been completed and submitted to the HERS rater and a form CF-4R is completed by a HERS Rater and submitted to the Building Department.
- The Title 24 definition of an HVAC "alteration" is:
  1) Installation or replacement of an HVAC <u>unit</u> (central furnace and/or air conditioner or heat pump), <u>or</u>
  2) Replacement of any of the following major HVAC <u>components</u> (the entire component, not a part within the component):

a) Air handler
b) Condenser (outdoor unit)
c) Indoor coil
d) Furnace heat exchanger
e) More than 40 feet of new ductwork in unconditioned space

By contrast, a "repair" is servicing an HVAC unit or fixing/replacing a defective part within a major component—such as the fan motor or blade within the air handler, or the compressor or cooling fan motor or blade within the condenser (outdoor unit). "Repairs" are not within the scope of Title 24 standards and do not mandate duct testing and sealing.

- When Title 24 duct testing and duct sealing is required, final duct leakage must be in conformance with the following criteria:

  Primary Duct Leakage Options

  1) Measured duct leakage shall be less than 15% of fan flow, or
  2) Measured duct leakage shall be reduced by more than 60% compared to measured duct leakage prior to the alteration, with visual inspection and smoke test by a HERS Rater performed to verify that all accessible leaks have been sealed.

  Secondary Duct Leakage Option. If it is not possible to meet the duct sealing options listed above:

  1) All accessible duct leaks shall be sealed, and
  2) A HERS Rater shall verify that all accessible leaks have been sealed by performing a visual inspection and a smoke test.

- When a primary duct leakage option is selected, conformance with Title 24 duct leakage criteria must be verified by a HERS Rater for a minimum of 1 in 7 jobs completed by each HVAC contractor. However, Title 24 gives the homeowner the option to request HERS verification for his/her home, rather than being part of a 1-in-7 sample.
- When the secondary duct leakage option is selected, 100% HERS verification is required.

8

Inspection Policies

8.1 Introduction

This section summarizes the inspection policies used in the LIEE Program to ensure safety and quality control in the installation of measures and minor home repairs. Subsection 8.2 discusses the designation of the responsibilities for inspections. Subsection 8.3 describes policies relating to pre-installation inspections. Subsection 8.4 presents policies on post-installation inspections.

8.2 Inspection Personnel

Utilities will use in-house personnel, contract employees, or contractors to conduct inspections. However, each utility will undertake in-house either the prime contractor (administration) function or the inspection function, but not both, with the very limited exceptions discussed in D. 00-07-020.

8.3 Pre-Installation Inspection

The four investor-owned utilities have different pre-installation inspection policies, as follows:

- PG&E performs pre-inspections on 5% of the homes receiving program services. PG&E's Energy Specialist performs a measure evaluation at the time of the energy education and assessment. While still on the customer's premises, the Energy Specialist will call PG&E's Central Inspection Program's toll free number and report the proposed weatherization measures and quantities, report the type and operating status of all combustion appliances present, and if a pre-inspection is selected, coordinate the pre-inspection appointment with the customer and PG&E. At the time of the PG&E visit, the inspector will confirm that the measures identified by the Energy Specialist are feasible, the quantities are accurate, and no feasible measures were overlooked. Additionally, they will verify that a refrigerator application was filled out and check the refrigerator outlet for proper wiring. In homes that are eligible for infiltration-reduction measures, PG&E verifies that the Pre-NGAT steps have been taken. PG&E performs pre-inspections on 100% of the homes that are eligible for infiltration-reduction

measures and on homes that are served with combustion fuels other than PG&E natural gas. In those homes with non-PG&E combustion fuels, PG&E will perform a Combustion Appliance Test and based on the test results will identify which of the feasible measures can be installed. If PG&E is unable to complete a Combustion Appliance Test, the home will be reported to the contractor as eligible for non-infiltration-reduction measures only.

- SDG&E has its program management prime contractor do an initial combustion air assessment and an initial assessment of the need for measures, prior to assigning a home for installation by the installation subcontractor. The subcontractor then does a more detailed audit and reconciles any discrepancies in its audit findings with the prime program management contractor. SDG&E has its inspectors conduct a "job start" inspection in up to 100% of all units prior to measure installations in multifamily complexes.
- In the SoCalGas weatherization program, the installation contractor (or a subcontractor) does the initial measure assessment. SoCalGas does not have a pre-inspection process conducted separate from outreach and assessment. However, furnace and water heater replacements require pre-authorization. Every service provider under the program contracts with or hires personnel to income qualify customers for the program. These outreach and assessment personnel are required to attend extensive training, which provides them with the tools for qualifying customers and assessing the measures that are feasible to install under program guidelines. The certified outreach and assessment personnel recruit customers for the service providers and are responsible for qualifying the customer and the dwelling. They also provide energy education to the customer and perform an assessment (pre-inspection) of the home for feasible measures to be installed. The customer is advised of the measures identified for installation but is told that the installation contractor will make final determination for feasibility of installation.
- SCE does not have a pre-inspection process. However, through its assessment process, customers' homes are evaluated for conditions favorable to measure installation. In order for outreach personnel to conduct home assessments for SCE's Energy Management Assistance (EMA) program they must receive certification for home assessment services by attending an EMA Assessment Workshop. Upon passing the written exam, the assessor is given a certificate that allows him/her to perform assessments. Assessors then examine low-income customers' homes for all qualifying measures. This assessment process is a "check and balance" system that assures the right conditions are present for measure installation. The assessment form is then processed and referred to the appropriate contractor for the measure installation. To ensure program integrity SCE has a contracted inspection agency perform random inspections on treated customer homes..

8.4 Post-Installation Inspection

8.4.1 General Polices on Post-Installation Inspection

Post-installation inspections are used to assure that Contractors install measures in accordance with the Installation Standards of the LIEE Program. In this subsection, specific polices relating to post-installation inspections are presented. These policies encompass the types of pass rates used in program administration, the frequency of post-installation inspections, the treatment of hazardous fails, resolution of disputes relating to inspections, charges for reinspection, inspection waivers, and minor job corrections.

8.4.2 Types of Pass Rates

Utilities or their designees will collect information on both per-home and per-measure pass rates. Per-home pass rates will be used for the purposes of determining minimum sample sizes for tracking performance. Per-measure pass rates will be used to tailor training and technical assistance for contractors, as well as to manage programs in a prudent manner.

8.4.3 Post-Installation Inspection Frequency

Utilities or their inspection contractors will inspect all ceiling insulation and furnace repair/replacement jobs. For all other jobs not involving ceiling insulation or furnace repair/replacement, random inspections will be conducted for a sample of dwelling units. Minimum sample sizes will be determined for each contractor, and will depend upon the contractor's past pass rates and the total number of units allocated to the contractor. Minimum sample sizes are shown in Table 8-1. Note that these sample sizes are designed to provide 90% confidence that the true pass rate is within 5% of the estimated value.

Table 8-1: Minimum Sample Sizes for Inspections (90%/±5% precision)

	Number of Homes Allocated to Contractor					
Pass Rate	**200**	**500**	**1000**	**2000**	**5000**	**10000**
0.70	140	241	317	377	425	444
0.75	129	210	265	306	337	348
0.80	115	176	213	239	257	264
0.85	98	139	161	175	184	188
0.90	76	97	108	114	118	119
0.95	45	51	54	56	57	57

Utilities or their inspection contractors may exceed these minimum sample sizes if, in the judgment of the administrator, larger sample sizes are necessary to preserve program quality control. Circumstances that may justify larger sample sizes include, but are not limited to, the following.

1. If the utility's program or the amount of additional post-inspections undertaken is small enough so that the additional post inspections can be conducted without substantially increasing overall program expenditures.
2. If a particular contractor exhibits a pattern of inspection failures that justifies inspection of a higher percentage of jobs.
3. If a contractor is on a quality improvement plan which requires them to improve their inspection pass rates.
4. If contractor crews are newly trained or new to the program, and require closer field supervision and on the job training.
5. If a contractor's installation crews are not sure of the program inspection standards, as exhibited in failed inspection results.
6. If a contractor's allocation of homes covers multiple counties.
7. If post-inspections are done in conjunction with post-installation natural gas appliance tests.[1]
8. If larger sample sizes are necessary to resolve disputes with contractors over estimated billing fail rates."

Utilities will keep records of actual inspection frequencies by contractor.

8.4.4 Hazardous Fails

Contractors are required to correct hazardous fails within 24 hours of notification by the utility and/or its inspector. Note: Treatment of fails relating to natural gas appliance testing will be considered later after natural gas appliance testing policies have been further considered.

8.4.5 Failed Inspection Dispute Resolution

Dispute resolution practices of the utilities require the use of a neutral third party arbitrator in instances where utility personnel are used to perform the inspections. Utilities who use utility personnel for the inspection function are required to either 1) have available at least two professional arbitration services to hear and determine appropriate action on any unresolved dispute between LIEE service providers and the utility or 2) provide language in

[1] The rational here is that there are economies associated with conducting post-installation inspections and post-installation natural gas appliance testing.

their contracts with LIEE service providers that the selection of an arbitrator must be mutually acceptable to both parties. The costs of such service shall be paid by the party which "loses" the arbitration. Utility personnel may, however, attempt to mediate or facilitate resolution of issues between utility inspectors and contractors, as long as a third party arbitrator is available for the final resolution of any unresolved disputes, as described above.

Utilities that do not use utility personnel for either the inspection function or LIEE contracting work may, but are not required to, employ the dispute resolution procedures described above. Instead, in those instances where a dispute arises between outside inspectors and contractors, the utility may utilize in-house personnel to hear and determine appropriate action on any unresolved dispute between LIEE service providers and inspectors. The costs of such service shall be paid by the party that "loses" the arbitration.

8.4.6 Failure to Install Feasible Measures

In the event that a contractor fails to correctly install a feasible measure, it will be accorded the following treatment.

- If the measure is installed, but installed incorrectly, the job will be given a fail.
- If the measure is not installed at all, but is included in the invoice for the dwelling, the job will be given a fail.
- If the measure is not installed at all, but is not included on the invoice and not on a pre-approval list, the job will be issued a correction. In the event that this correction is not made within 10 calendar days, the correction will revert to a job fail.
- If the measure is included on a pre-approval list but not installed, the job will receive a fail.

8.4.7 Charge for Reinspection

The utility will levy a charge in the event that a job fail or a job correction is issued and the contractor contests this action. If the failure or correction is upheld, the utility will charge the contractor for the reinspection of the job by the utility arbitrator. If the utility uses an inspection contractor and the job fail or correction is reversed, the utility will charge the inspection contractor for the reinspection of the job by the utility arbitrator, and will reimburse the installation contractor for any direct costs associated with the reinspection of the job.

8.4.8 Inspection Waivers

Policies on inspection waivers vary between mandatory and non-mandatory inspections, as follows.

- ***Mandatory inspections*** are those required for projects in which ceiling insulation is installed. An attempt will be made to inspect all such projects prior to making final approval of payment to the weatherization contractor. For mandatory inspections, three attempts will be made to arrange for a post-installation inspection within 30 calendar days of the notification of job completion. After three such attempts, the inspection provider will send a certified letter to the participant asking for permission to inspect the home. If the participant does not respond to this certified letter within two weeks, the inspection provider need not conduct the inspection prior to making final approval of payment for the weatherization job.[2]
- ***Non-mandatory inspections*** relate to projects not involving ceiling insulation. They are non-mandatory in the sense that only a sample of projects must be inspected. A non-mandatory inspection of a sampled project may be waived by the utility after three attempts to contact the participant, provided that the inspection provider replaces this project with another and completes a sufficient number of inspections as provided in the policy on post inspection frequency (see above).

8.4.9 Post Installation Job Correction Policies

Inspectors will be permitted to make minor corrections at the site. Minor job corrections will be limited to corrections that satisfy the following conditions.

- The error is the only error found at the site.
- Are not associated with errors that create hazardous conditions.
- Can be made with tools typically carried by inspectors (e.g., screwdrivers, putty knives, etc.).
- Can be made with materials normally carried by inspectors (e.g., screws, glazing compound, etc.).
- Can be carried out within a few minutes by inspectors.
- Can be accomplished at a minimum of inconvenience to inspectors.

In the event that a minor correction is made, the inspector will record it. Each time a minor job correction is made, the contractor will be notified. Minor corrections will become part of the contractor's record. Inspector reports will be entered into a database, and reports on contractor performance will be monitored.

---

[2] Even though SoCalGas pays the contractor prior to inspection, an adjustment to the payment may be made if an inspection reveals problems. Our interpretation is that the final approval of the SoCalGas payment is thus not made until after an inspection, presuming that an inspection can be made.

A maximum number of such post-installation minor corrections will be determined for each contractor and each measure. This maximum will be either three corrections, or 0.5% of the total number of a contractor's allocation of participants expected to be inspected, whichever is greater.

Inspection providers will develop monthly reports on minor job corrections by contractor and measure. In the event that a third party contractor conducts inspections, the contractor will submit these reports to the utility on a regular basis, as specified in the contract between the utility and the third party inspector. As soon as a report indicates that a contractor has exceeded the maximum allowable number of job corrections for a specific measure during the program year, that contractor will be informed by the utility that no further minor job corrections will be made by inspectors on installations of the measure in question during the program year. Inspectors will also be informed that they should no longer perform minor job corrections on the measure in question for that particular contractor for the measure in question for the remainder of the year.

Minor corrections associated with a specific weatherization measure in a specific program year will not be counted as inspection failures for the contractor until the contractor is notified that the maximum number of allowable minor job corrections has been exceeded. Subsequent problems associated with the installation of the measure will be counted as fails in inspection records, and the contractor will be required to revisit the site to make corrections.

In the event that a Contractor's overall performance falls short of Program standards, a corrective action plan may be instituted. Such a corrective action plan may be required if the Contractor fails to do one or more of the following.

- Meet production standards.
- Complete work on time.
- Achieve and maintain an overall pass rate of 90% of all homes.
- Correct hazardous fails within 24 hours.
- Correct non-hazardous job fails within 30 calendar days.
- Provide field supervision.
- Submit accurate and legible invoices or other job related paperwork.

In the event that a corrective action plan is instituted for a Contractor, minor job corrections will no longer be performed for that Contractor during the remainder of the Program Year.

9

Contractor Eligibility

9.1 Introduction

This section outlines contractor eligibility conditions under the LIEE Program. Subsection 9.2 deals with insurance requirements. Subsection 9.3 relates to licensing requirements. The purpose of this section is to provide general information on these requirements. It may not include all of the requirements specified in the contracts between contractors and Program Administrators.

9.2 Insurance Requirements

Contractors shall maintain insurance in full force and effect during the life of the contract with LIEE, with responsible insurance carriers authorized to do business in California and having a Best Insurance Guide (or equivalent) rating of not less than A:VII. All policies shall be endorsed to require at least 30 days notice to the utility of any change or cancellation. Original certificates of insurance shall be provided to the Program Administrator prior to the commencement of any work for this program.

The following insurance shall be provided:

- Workers'Compensation and Employer's Liability Insurance,
- Comprehensive General Liability Insurance, and
- Comprehensive Automobile Liability Insurance.

Required amounts of coverage will be provided by the utility. The Program Administrator shall be named as an additional insured in each policy except for Workers' Compensation. Contractors are also required to ensure that all subcontractors, if approved, maintain the same levels and types of insurance and are not employed in LIEE if insurance has lapsed.

Workers'Compensation Insurance is required to maintain a contractor's license in good standing with the Contractors State License Board (CSLB). The CSLB will suspend the contractor's license of any contractor whose insurance lapses or is canceled. It is the responsibility of each LIEE contractor to provide documentation that all required insurance is

in effect. This includes but is not limited to providing LIEE staff with new Certificates of Insurance, as necessary, at the renewal date of insurance.

When records indicate a lapse of insurance coverage, contractors will be immediately suspended from working in LIEE.

9.3 Licensing Requirements

Any organization or company contracting with a Program Administrator under the LIEE Program must comply with all applicable federal, state and local laws and regulations, as well as with utility guidelines. Contractors and subcontractors must also comply with any applicable CSLB licensing requirements, incl uding current requirements for elelctrical, plumbing and HVAC, and must remain in good standing with the CSLB

10

Natural Gas Appliance Testing

10.1 Introduction

This section summarizes the statewide policy on LIEE Program natural gas appliance testing (NGAT). Subsection 10.2 discusses the circumstances when such testing must be conducted. Subsection 10.3 presents the general protocols that are followed in the course of natural gas appliance testing. Subsection 10.4 addresses the timing of testing. Subsection 10.5 considers actions to be taken when one or more test is failed by appliances in a participating home. Subsection 10.6 discusses the types of personnel used for the assessments. Finally, Subsection 10.7 provides NGAT nonfeasibility criteria.

Note that specific standards for these natural gas appliance testing (NGAT) protocols are described in the *LIEE Weatherization Installations Standards (WIS) Manual.*

10.2 Applicability of Natural Gas Appliance Testing

10.2.1. General Applicability

In general, natural gas appliance testing will be conducted for all homes that receive infiltration reduction measures and that have at least one natural gas appliance affecting the living space.[1] In addition, the repair and replacement of a natural gas furnace or water heater involves appliance testing. See the Natural Gas Appliance Testing section in the California Weatherization Installation Standards for Conventional Homes or Mobile Homes, as applicable.

10.2.2. Applicability to Combustion Fuels other than IOU Natural Gas

Homes with non-IOU (e.g., propane) space heating fuels are not eligible for infiltration reduction measures. As a consequence, they are not eligible for natural gas appliance testing. Homes with IOU space heating but which use a non-IOU combustion fuel for another appliance (say, water heating) are also ineligible for NGAT due to the inability of the IOUs to service combustion appliances using non-IOU fuels. The IOUs will refer these latter homes to local LIHEAP agencies to conduct testing and do any repairs or replacement of

[1] The NGAT section of the LIEE *WIS Manual* describes the conditions under which an appliance is determined to affect the living space.

non-IOU combustion fuel appliances and charge such services to the LIHEAP agencies' CSD-funded weatherization programs. Whether the LIHEAP agencies would also install infiltration reduction measures, or any other weatherization measures under their LIHEAP programs, would be subject to voluntary agreements freely entered into by the IOUs and the local LIHEAP agencies.

Any agreement between an IOU and a local LIHEAP agency which does not contract with that IOU to provide weatherization services under the IOU's LIEE program will be voluntarily negotiated on a case-by-case basis, given different geographic areas served, and different situations which might occur in different parts of each IOU's service area.

In any part of a given IOU service area where the local LIHEAP agency chooses NOT to enter into such an agreement, the IOU will continue to install all feasible non-infiltration weatherization measures under its LIEE program, then refer customers to the local LIHEAP agency if they want to have their non-IOU fuel combustion appliances tested, repaired or replaced, and/or want to have infiltration reduction measures installed by the LIHEAP agency.

10.3 Natural Gas Appliance Testing Protocols

10.3.1. General Protocols

General natural gas appliance testing (NGAT) protocols are presented below. Note again that detailed procedures are described in the NGAT section of the *LIEE Weatherization Installation Standards Manual.* The types of checks conducted as part of NGAT are described in this section.

10.3.2. Pre-Weatherization Evaluations of Gas Appliances

In order to avoid cases in which post-weatherization NGAT would discover nonconforming conditions that (a) preclude installation of infiltration reduction measures, and (b) cannot be corrected within the scope of the program, some pre-weatherization evaluations of gas appliances are performed as part of the initial home assessment. Pre-weatherization appliance evaluations include the following components:

- ***Gas Leaks.*** Each gas-burning appliance is checked for the presence of gas leaks. When a natural-gas leak is found, the utility is contacted for gas service repairs. Non-IOU gas leaks are treated in accordance with utility-specific policies. All gas leaks must be repaired before weatherization commences.
- ***Combustion and Ventilation Air (CVA) Evaluations.*** CVA is evaluated for furnaces and water heaters to determine if it is adequate and, if inadequate, whether correction is feasible/possible.

- ***Flue and Vent Pipe Termination Evaluations.*** Flue and vent pipe terminations are checked to determine if any violate NGAT criteria and, if nonconforming, whether correction is feasible.
- ***Appliance Operation and Accessibility.*** All gas-burning appliances are checked to determine whether (a) they are accessible for testing, and (b) they are operable. Non-operable natural gas appliances are referred to the appropriate utility service department.
- ***Unvented Space Heater.*** The dwelling is checked for presence of an unvented combustion appliance used for heating the living space (which will preclude installation of infiltration reduction measures if not removed/eliminated).
- ***Whole House Fan.*** When a whole house fan exhausting into the attic is present, the attic is checked for the presence of a gas water heater or gas furnace with standing pilot (which will preclude installation of infiltration reduction measures).
- ***Gas Clothes Dryer.*** If located within the living space, the clothes dryer moisture exhaust is checked to determine if it is properly vented outdoors. If not properly vented outdoors, infiltration reduction measures will not be installed. This restriction does not apply to a gas clothes dryer located in an attached garage.
- ***Gas Range with Heater/Incinerator.*** When a gas range has a built-in space heater and/or incinerator, if the appliance is not properly vented outdoors, infiltration reduction measures will not be installed.
- ***Water Heater in Bedroom.*** If an open combustion water heater is present in a sleeping area, infiltration reduction measures will not be installed.
- ***Mobile Homes.*** Additional checks will be made in mobile homes to determine if (a) gas cooking is present and the kitchen exhaust to outdoors is nonconforming, (b) an open combustion space or water heater is present within the living space, and (c) an exterior-accessed appliance enclosure has unacceptable isolation of furnace return air. Item (a) may be corrected as a Minor Home Repair. Items (b) and (c) preclude installation of infiltration reduction measures.

Required corrections will be performed before weatherization commences. The owner will be informed of conditions that preclude installation of infiltration reduction measures and cannot be remedied by the LIEE program (e.g., exhausting clothes dryers outdoors, and repair or replacement of appliances and gas vents for which repair or replacement is not available).

10.3.3. Post-Weatherization Natural Gas Appliance Testing (NGAT)

After completion of weatherization that includes infiltration reduction measures, NGAT is performed for all natural gas appliances affecting the living space. Testing of gas appliances using non-IOU fuels is conducted in accordance with utility-specific policies (see 10.2.2 and 10.4). Post-weatherization NGAT includes the following components:

- ***Visual Examinations.*** Visual examination steps include the following: flue and vent system checks; appliance component checks; re-check for gas leaks, inoperable or inaccessible appliances, nonconforming appliances, and whole house fan vented into attic; and check for properly-blocked fireplace damper if gas log is used as the primary heat source.
- ***Combustion and Ventilation Air (CVA) Verification.*** CVA adequacy is verified.
- ***Carbon Monoxide (CO) Tests.*** A variety of ambient carbon monoxide tests are conducted on natural gas appliances. The specific nature of these tests is considered in 10.3.4.
- ***Draft Tests.*** Smoke tests are used to check for proper drafting of appliances for which these tests are applicable (e.g., open combustion natural draft space and water heaters and gas logs).

10.3.4. Ambient CO Testing of Natural Gas Appliances

The assessment of non-IOU gas appliances was considered above. For IOU-fueled gas appliances (appliances using natural gas provided by SDG&E, PG&E or SoCal Gas), ambient CO testing is conducted using the following protocols:

- ***Space Heating Appliances.*** Appliance Ambient CO Test is performed for all space heating appliances.
- ***Water Heaters.*** Appliance ambient CO Test is also performed for water heaters in a location defined in the WIS as affecting the living space.
- ***Cooking Appliances.*** Room Ambient CO tests are performed in the kitchen separately during operation of each cooking appliance component (cook top, oven, and broiler).
- ***Gas Logs.*** Exhaust gas CO test is conducted inside the top edge of the fireplace opening on gas logs.
- ***Clothes Dryers.*** No CO tests are conducted on gas clothes dryers.

10.3.5. Disposition of Appliance Fails/Problems

If a problem is identified through the application of the overall natural gas appliance testing protocol (i.e., elevated CO, inadequate draft, or defect causing an unsafe condition), the case will be referred for resolution to qualified utility-trained personnel or a contractor licensed to repair appliances. Such resolution may involve the use of flue CO testing as well as other procedures.

10.4 Timing of Combustion Appliance Testing

10.4.1. Homes with Natural Gas Appliances

For homes with natural gas appliances, post-weatherization NGAT protocols are conducted after weatherization. Post-weatherization NGAT shall be conducted within five (5) working days from the date that infiltration reduction measures are installed.

10.4.2. Homes for which Infiltration Reduction is Simulated

Temporary sealing/blocking of defective windows and doors, in order to perform post-weatherization NGAT, is allowed when required materials (such as specialty glass or special-order windows or doors) are not available to be installed concurrently with the other weatherization measures. NGAT will be conducted with the defect sealed/blocked (e.g., with plastic sheeting) to simulate infiltration reduction achieved by the completed window/door repair/replacement. A repeat of NGAT following the completed repair/replacement is not required.

10.5 Actions to be Taken When Appliances Fail NGAT

The following actions will be taken when appliances fail NGAT:

- In owner-occupied homes, natural gas space heaters failing one or more of the tests covered by the NGAT protocol will be provided with Service/Adjustment and, if necessary, will be repaired or replaced subject to Program policies and procedures.[2]
- In owner-occupied homes, natural gas water heaters failing one or more of the tests covered by the NGAT protocol will be provided with Service/Adjustment and, if necessary, will be repaired or replaced subject to Program policies and procedures.[3]
- In owner-occupied homes, non-program appliances[4] failing one or more of the tests covered by the NGAT protocols will be provided with Service/Adjustment .[5] If Service/Adjustment does not correct the problem in question, the appliance will be tagged, shut off, and/or capped and reported to the owner.
- In renter-occupied homes, appliances failing one or more of the tests covered by the NGAT protocol will be provided with Service/Adjustment.[6] If Service/Adjustment

---

[2] Note that the absence of a furnace in cases where another gas appliance is used for space heating will constitute an NGAT fail.

[3] A water heater with a leaky tank will be considered to fail NGAT.

[4] Appliances for which LIEE repair or replacement is not available.

[5] In this context, Service/Adjustment of an appliance entails providing services that are within the scope of the gas service department for customers in general.

does not correct the problem in question, the appliance be will be tagged, shut off, and/or capped and reported to the tenant and the landlord.

10.6 Personnel Performing Natural Gas Appliance Assessments and Testing

The utilities have the option of conducting natural gas appliance assessments and testing using in-house staff or contracting with third parties to provide these services.

10.7 Nonfeasibility Criteria for Natural Gas Appliance Testing

Nonfeasibility Criteria for Natural Gas Appliance Testing for the Entire Dwelling. Natural Gas Appliance Testing shall not be conducted in a dwelling when:

- No infiltration-reduction measures are installed,
- No natural gas appliance affecting the living space is present.
- A non-IOU combustion fuel is used for space heating.

Nonfeasibility Criteria for Natural Gas Appliance Testing for Individual Appliances. Natural Gas Appliance Testing shall not be conducted for an appliance if it:

- Is abandoned.
- Is inaccessible.
- Uses non-IOU combustion fuel.

CALIFORNIA CONVENTIONAL HOME WEATHERIZATION INSTALLATION STANDARDS

for use in

California's Low Income Energy Efficiency Programs

administered by

San Diego Gas and Electric Company
Southern California Edison
Southern California Gas Company
Pacific Gas and Electric Company

Part 1a (Conventional-*edits accepted*)

OCTOBER 20, 2005 –*REVISIONS*

ABBREVIATIONS AND ACRONYMS

AAMA	American Architectural Manufacturers Association
ACCA	Air Conditioning Contractors of America
ACDD	Annual Cooling Degree Days (also see CDD)
AFUE	Annual Fuel Utilization Efficiency
AGA	American Gas Association
AHDD	Annual Heating Degree Days (also see HDD)
ANSI	American National Standards Institute
ARI	Air Conditioning and Refrigeration Institute
ASHRAE	American Society of Heating, Refrigerating and Air-Conditioning Engineers
ASME	American Society of Mechanical Engineers
ASTM	American Society for Testing and Materials
AWG, awg	American Wire Gage
BEAR	Bureau of Electronic and Appliance Repair
BEF	Ballast Efficacy Factor
BOCA	Building Officials and Code Administrators
Btu	British Thermal Unit
Btu/hr	British Thermal Units per Hour
°C	Degrees Centigrade
CABO	Council of American Building Officials
Cal OSHA	California Occupational Safety and Health Administration
CAS	Combustion Appliance Safety
CASIF	Combustion Appliance Safety Inspection Form

© RHA • 1/1/04 (Rev. 10/20/05)

ABBREVIATIONS AND ACRONYMS

CAZ	Combustion Appliance Zone
CBC	California Building Code
CBM	Certified Ballast Manufacturers
CBO	Community Based Organization
CCR	California Code of Regulations
CDD	Cooling Degree Days (also see ACDD)
CEC	California Energy Commission and California Electrical Code
CFL	Compact Fluorescent Lamp
CFM, cfm	Cubic Feet per Minute
CFM_{25}	Cubic Feet per Minute of Air Flow at 25 Pascals of Pressure
CFM_{50}	Cubic Feet per Minute of Air Flow at 50 Pascals of Pressure
CFR	Code of Federal Regulations
CMC	California Mechanical Code
CO	Carbon Monoxide
COP	Coefficient of Performance
CPSC	Consumer Products Safety Commission
CSD	(California Department of) Community Services and Development
DOE	(United States) Department of Energy
DV	Direct Vent (Furnace/Heater)
EER	Energy Efficiency Ratio
EPA	Environmental Protection Agency
ESP	Economic Stop Parameters/Economic Stop Policy

ABBREVIATIONS AND ACRONYMS

°F	Degrees Fahrenheit
F.S.	Federal Specifications
FAU	Forced Air Unit
Fpm	Feet per Minute
GFCI	Ground Fault Circuit Interrupter
HCD	(California Department of) Housing and Community Development
HDD	Heating Degree Days (also see AHDD)
HDL	House Depressurization Limit
HPD	Heat Producing Device
HUD	(U.S. Department of) Housing and Urban Development
HVAC	Heating Ventilation and Air Conditioning
Hz	Hertz
ICBO	International Conference of Building Officials
ID	Inside Diameter
IWC, iwc	Inches of Water Column (Same as IWG, Inches of Water Gauge)
IWG, iwg	Inches of Water Gauge (Same as IWC, Inches of Water Column)
KHz	Kilohertz
MVR	Minimum Ventilation Requirement
NEC	National Electrical Code
NEMA	National Electrical Manufacturers Association
NFPA	National Fire Protection Association

ABBREVIATIONS AND ACRONYMS

NFRC	National Fenestration Rating Council
NFVA, NFV Area	Net Free Venting Area: Total vent opening area minus the blocking effect of louvers, grilles, and screens
OC	On Center
OD	Outside Diameter
OSHA	Occupational Safety and Health Administration
P&P	Policies & Procedures
Pa	Pascal (See Definitions)
PPM, ppm	Parts per Million
Psf	Pounds per Square Foot
Psi	Pounds per Square Inch
RTV	Room Temperature Vulcanization (e.g., RTV Silicone)
SEER	Seasonal Energy Efficiency Ratio
T&P Valve	Temperature and Pressure Relief Valve
TPE	Thermoplastic Elastomer
UBC	Uniform Building Code
UL	Underwriters Laboratories
UMC	Uniform Mechanical Code
UPC	Uniform Plumbing Code
UV	Ultraviolet
WC, wc	Water Column (Same as Water Gauge)
WG, wg	Water Gauge (Same as Water Column)
WIS	Weatherization Installation Standards

Wx	Weatherization

© RHA • 1/1/04 (Rev. 10/20/05)

DEFINITIONS

Abandoned Appliance	An appliance which is no longer used and has been removed from service and: (1) the flexible gas connector has been removed, and (2) the gas line shut-off valve has been capped, or the valve has been removed and the pipe capped.
Backdrafting	The reverse flow of combustion gases down the vent pipe and out the draft hood of a natural vent open combustion appliance. Intermittent backdrafting can be caused by wind gusts. Ongoing backdrafting can be the result of a negative pressure in the combustion appliance zone (CAZ) caused by (a) duct system return leaks in the vicinity of the appliance, and/or (b) the excessive influence of mechanical systems exhausting air from the structure (e.g., bathroom and utility room exhaust fans, range hood fan, clothes dryer, built-in vacuum system, etc.).
Built-up Roof (Low-Slope)	A low-slope roof that is "built up" with roofing felt laminated in overlapping layers to form a membrane that is two to four plies thick. To protect the membrane from sunlight and physical wear, a layer of aggregate (crushed stone or other mineral granules) is embedded in the surface.
Closure System	The sum total of components utilized to secure and seal a duct system joint or seam against air leakage (e.g., pressure sensitive tape, or heat activated tape, or mastic with fiberglass mesh reinforcement). Closure systems for non-metallic flexible ducts also include one or more drawbands.
Combustion Air	The total amount of air provided to the space, which contains fuel-burning equipment; it includes air for fuel combustion, for draft hood dilution, and for ventilation of the equipment enclosure. (Reference 2001 UMC, Section 205).
Combustion Appliance Zone (CAZ)	The room or area of a home in which an open combustion natural draft appliance (typically a furnace, water heater, wood burning stove or fireplace) is located. It could be a living room containing a wood burning stove, a kitchen or utility porch containing a

water heater, or an appliance enclosure. Excessive depressurization of the CAZ causes backdrafting and spillage of combustion gases into the room.

Conditioned Space — An area, room, or space normally occupied and being heated or cooled by any equipment for human habitation. (Reference 2001 CMC, Section 205.)

Confined Space — A room or space having a volume less than 50 cubic feet per 1,000 Btu/h of aggregated input rating of all-fuel burning appliances installed in that space. (Reference 2001 CMC, Section 205.)

Drawband — A device which encircles a duct and mechanically secures the core-to-fitting attachment (i.e., a synthetic duct tie or a worm drive stainless steel clamp). Duct ties are also used to secure fiberglass duct wrap and to seal jacket overlaps at flexible duct splices.

Duct Systems — All ducts, duct fittings, plenums, and fans assembled to form a continuous passageway for the distribution of air. (Reference 2001 CMC, Section 206.)

Enclosed Cavity — A building cavity that is totally enclosed and inaccessible for installation of measures. An example is a low-profile section of attic that is closed off by drywall, plywood, or other sheathing. Because of inadequate crawl clearance, proper installation of insulation would not be feasible even if an access hole were cut.

FAU — Forced air unit, which is that portion of a central heating and/or air conditioning (A/C) system which contains the air handler (blower section). In a "Split System," it is the furnace. In a "Package System," the entire heating and A/C "Package Unit" may be referred to as the FAU.

Heat Activated Tape — Metallic tape with an adhesive coating that is activated and cured by the application of heat and pressure.

Inaccessible Appliance — A combustion appliance that cannot be accessed for NGAT testing, due to a locked passage or a physical impediment. Examples include a water heater in a locked room/enclosure for which a key is not available,

© RHA • 1/1/04 (Rev. 10/20/05)

an attic-mount furnace that requires entry through an inaccessible MUD unit, and a floor furnace in a crawl space with inadequate crawl clearance. A floor furnace may also be inaccessible because it has been covered over by plywood or attached floor covering (e.g., wall-to-wall carpet or vinyl). A floor or wall furnace may be inaccessible because it has been turned off and blocked by heavy furniture (e.g., a hutch or cabinet).

Labeled — Equipment or materials to which has been attached a label of a nationally recognized testing agency that maintains periodic inspection of the production of labeled equipment or materials. Labeling indicates compliance with nationally recognized standards. (Also see "Listed" and "UL Classified, Labeled, Listed".)

Lapped Seam — The seam (joint) formed where two pieces of material (usually sheet metal) are overlapped.

Listed — Equipment or materials included in a list published by a nationally recognized testing agency (e.g., UL, CSA, ITS, ETL, etc.) that maintains periodic inspection of the production of listed equipment or materials. Listing indicates compliance with nationally recognized standards. (Also see "Labeled" above and "UL Classified, Labeled, Listed" below.)

Longitudinal Joint — Lengthwise joint along a piece of duct (e.g., the joint running the full length of a snap-together sheet metal duct). [Note: *longitudinal* means "lengthwise"...in contrast with *transverse,* which means "across".]

NFPA 90B — Standards governing installation of "Warm Air Heating and Air Conditioning Systems" in one- or two-family dwellings and structures not exceeding 25,000 cu. ft. Provides specifications for the manufacture and installation of rigid metal ductwork and references UL 181 regarding factory made air ducts (e.g., flexible ducts). Installations in larger structures are addressed by NFPA 90A.

DEFINITIONS

NFV, NFVA	NFV stands for "net free venting." NFVA is "net free venting area," the net amount of venting area provided by a vent after the blocking effect of mesh and/or louvers has been subtracted from the gross area of the vent opening(s).
Package Unit	A combination heating and air conditioning system contained within one housing unit, which is installed outdoors (on the roof or on a slab next to the house). (Also see "Split System.")
Pascal (Pa)	A small unit of pressure equivalent to 0.004 inches of water column (IWC). 1 Pa = 0.004 IWC, and 1 IWC = 250 Pa. 25 Pa, the pressure typically used to test duct systems for leakage, is equivalent to 0.1 IWC. Conversion formulas are: [Pa = IWC ÷ 0.004] and [IWC = Pa x 0.004].
Perm	A unit of permeance, which refers to how permeable a material is (e.g., how well moisture will pass though a vapor barrier).
Plenum	An air compartment or chamber, including uninhabited crawl spaces, areas above a ceiling or below a floor, to which one or more ducts are connected and which forms part of either the supply-air or return-air system. Typically on residential HVAC systems, the supply and return plenums are the large rectangular boxes/chambers that connect the FAU to the supply duct system and the return-air system. (Reference 1998 CMC, Section 215-P.)
Pressure Sensitive Tape	Duct tape with a tacky adhesive coating (e.g., butyl, acrylic, etc.) which will adhere to a surface with the application of pressure (heat not required). Duct tapes must be listed and marked per UL 181A and 181B standards.
Repair	Corrective work performed by a qualified technician, intended to make a natural gas appliance operate properly, when correction is beyond the scope of "Service/Adjustment".

© RHA • 1/1/04 (Rev. 10/20/05)

DEFINITIONS

Replacement — Complete replacement of a defective natural gas appliance, when repair is not feasible: i.e., the cost to repair the appliance exceeds program guidelines, or parts required to make the appliance safely operable cannot be obtained.

Service/Adjustment — Minor corrective work, within the normal scope of service for customers in general, performed by utility gas service personnel, or designated representative, intended to make a natural gas appliance operate properly without repair or replacement.

Spillage — In a natural draft open combustion appliance, the unwanted outflow of combustion gases from the draft hood into the atmosphere of the room or area where the appliance is located. Spillage occurs when the vent system draft is inadequate to carry combustion gasses up through the vent pipe and outdoors. Spillage occurs briefly when combustion first begins in a cold appliance, because cold air in the vent pipe impedes exhaust flow until the systems warms up. Continuous spillage may result when the vent pipe is blocked by an obstruction or is improperly constructed (too many elbows, improper slope, inadequate diameter, etc.).

Split System — A heating and cooling system in which the air conditioning evaporator coil is attached to the furnace, which is located indoors (typically in the garage, attic, or interior closet), and the condenser unit (with coil, compressor, and fan) is installed outdoors, usually on a slab next to the house. (Also see "Package Unit.")

Transverse Joint — The joint formed when two pieces of duct are spliced together (e.g., the joint around the circumference where two round ducts are joined together, and the joint around the perimeter where two rectangular ducts are joined together). [Note: *transverse* means "across"...in contrast with *longitudinal*, which means "lengthwise".]

UL 181 — UL "Standard for Factory-Made Air Ducts and

Connectors".

UL 181A — UL standard for pressure sensitive aluminum tapes, heat activated aluminum tapes, and mastic closure systems for use with rigid fiberglass air ducts.

UL 181B — UL standard for pressure sensitive tapes and mastic closure systems for use with flexible air ducts.

UL Class 0 Duct — Air duct materials having a fire hazard classification of zero (flame spread and smoke developed).

UL Class 1 Duct — Air duct materials having a flame-spread rating not over 25 without evidence of continued progressive combustion and a smoke-developed rating not over 50.

UL Classified, Labeled, Listed, Recognized

- UL Classified means that UL testing was limited to examination of one potential hazard.
- UL Labeled means that a product is either UL Listed or UL Classified. Note that a product can be certified and "listed" without involving UL. Other accredited laboratories (e.g., CSA International, ITS Intertek Services, ETL SEMKO, etc.) can test products and certify conformance with established standards. Such products can thus be "listed and labeled" without reference to UL. (See “Listed” and “Labeled” above.)
- UL Listed means that UL testing included examination of *all* foreseeable hazards.
- UL Recognized means that a component (such as a motor) is approved for use in a UL Listed product (such as an evaporative cooler). The complete cooler is UL Listed, but the tested and approved components used in it are “UL Recognized components.” Each UL Recognized component is tested to a UL standard applicable to that component, and it is “recognized” for use in a UL Listed product.

SECTION 1 PREFACE
FOR
CAULKING

1. INSTALLATION POLICIES

1.1. For homes with lapped siding; 1) caulk shall be applied in standard locations such as door thresholds, door stops and gaps between different materials, etc., however, 2) seams between lapped siding must not be caulked.

1.2. When exterior caulking is required above the first story, it shall be applied whenever the area requiring caulking is readily accessible.

SECTION 2 PREFACE
FOR
DOOR WEATHERSTRIPPING

1. INSTALLATION POLICIES

1.1. The contractor may adjust existing weatherstripping in lieu of replacement only if existing weatherstripping is functional and creates a proper seal.

1.2. Door shoe and threshold combinations must be installed unless proven to be nonfeasible.

1.3. A threshold should not be installed which exceeds 1" in height from the finished floor (1/2" in height for handicapped).

1.4. When the installation of a door shoe and threshold combination is not feasible for the following reasons, an automatic sweep may be used:

- Medical reasons, such as wheelchairs or walkers, require that the floor be as flat as possible.
- Metal doors cannot be cut to accommodate a shoe.
- Doors open outward and do not overlap a floor surface when closed. "Bumper" type thresholds may be used in this circumstance if a tripping hazard will not be created.
- Finished floor is ceramic tile (100% seal at grout lines is not required).
- The installation of a proper threshold requires carpet cutting or repair to wooden or concrete sill.
- The door is unusually expensive and might be aesthetically damaged by cutting.

1.5. A stationary sweep can be used in lieu of an automatic sweep if a door shoe and threshold combination is not feasible and an automatic sweep cannot be installed.

1.6. The use of flip up sweeps is not allowed.

SECTION 3 PREFACE
FOR
CEILING INSULATION

1. INSTALLATION POLICIES

1.1. Ceiling insulation feasibility, and R-value to be added, shall be determined by utilizing the following table.

Climate Zone*	Existing Insulation Level	Action**
CEC Climate Zones 2 through 15	R-11 or less	Raise R-Value to R-30
	More than R-11	Do not install additional insulation
CEC Climate Zones 1 and 16	R-19 or less	Raise R-Value to R-38
	More than R-19	Do not install additional insulation

* See Program P&P manual, Section 7.3.4.

** Reference is to the final level of insulation (any pre-existing R-value plus insulation added under the program).

1.2. In cases where local jurisdiction mandates more insulation than required by the table above, contractors may install higher levels only after forwarding documentation of the more stringent requirements to and obtaining written authorization from the LIEE Program Manager.

1.3. When no attic access exists, contractors will install one prior to installing ceiling insulation. Minimum dimensions of the new opening shall be 30" by 22" or as required by local code.

1.4. If the gable vent is used for attic access, it must be hinged and large enough (18" x 18" minimum) to provide access for the inspector.

1.5. In the event holes are observed in attic fire walls while performing attic insulation, the prime contractor will document and notify the property owner of the existing condition.

1.6. There is no minimum attic square footage required for ceiling insulation.

1.7. Homes having (a) separate attics, or (b) contiguous attics consisting of different sections with various crawl clearances shall have insulation installed only in the sections which have the specified clearances (see Nonfeasibility Criteria).

1.8. Before insulation is installed, duct leaks shall be sealed, disconnections shall be reconnected, and needed duct repairs shall be made in per Duct Sealing Standards (Section 20).

SECTION 4 PREFACE
FOR
ATTIC VENTILATION

1. INSTALLATION POLICIES

1.1. There are no standard installation policies for this measure.

SECTION 5 PREFACE

FOR

WATER HEATER INSULATION

1. INSTALLATION POLICIES

1.1. Only water heaters supplying hot water to residential units receiving other program measures are eligible to receive water heater insulation blankets.

SECTION 6 PREFACE

FOR

WATER HEATER PIPE INSULATION

1. INSTALLATION POLICIES

1.1. There are no standard installation policies for this measure.

SECTION 7 PREFACE
FOR
COVER PLATE GASKETS

1. INSTALLATION POLICIES

1.1. All broken, cracked, or missing cover plates shall be replaced.

1.2. All gaskets must be contractor-installed. No gaskets are to be left behind for customer installation.

SECTION 8 PREFACE

FOR

ENERGY-SAVER SHOWERHEADS AND FAUCET AERATORS

1. INSTALLATION POLICIES

1.1. All existing showerheads with a flow rate greater than 3gpm and not required for medical reasons shall be replaced with low-flow showerheads.

1.2. Replaced showerheads may be left with the customer or the property manager only if requested.

SECTION 9 PREFACE

FOR

EVAPORATIVE COOLER AND AIR CONDITIONER VENT COVERS

1. INSTALLATION POLICIES

1.1. Shop-built wooden vent covers can only be used when a commercially manufactured cover is not available.

1.2. Each cover must be checked for proper fit. Removal and reinstallation must be demonstrated to the customer.

1.3. In the cooling season when the cooler or window/wall air conditioner is in use, Contractor can leave the cooler cover uninstalled after the initial installation and customer instruction.

SECTION 10 PREFACE
FOR
DUCT TESTING

1. INSTALLATION POLICIES FOR DUCT TESTING AND SEALING AS A FREE-STANDING MEASURE[1]

1.1. Duct testing and sealing as a measure will be offered only in Single Family and Mobile Homes.

1.2. Duct testing and sealing as a measure will be offered in all Climate Zones for Homes with Natural Gas Space Heating provided by the IOU.

1.3. For homes with electric space heat provided by the IOU, duct testing and sealing as a measure will be offered only in Climate Zones 10-16.

1.4. In order to be considered as a Program measure, the potential for duct leakage reduction must be at least 13% of total fan flow (airflow).

1.5. For a duct system to be considered sealed, (a) the duct leakage reduction must equal or exceed 13% of airflow; (b) the final duct leakage must be reduced to less than 15% of airflow, or, if this cannot be reached, (c) all accessible duct leaks must be sealed as verified by smoke tests.

1.6. Duct sealing is <u>not</u> required unless initial leakage is at least 28% of airflow.

1.7. The utility or its designee will verify initial and final duct leakage rates, in accordance with the procedures in WIS Section 10, Duct Testing Standards, and Appendix D, Methods for Estimating and Measuring Airflow.

2. INSTALLATION POLICIES FOR DUCT TESTING AND SEALING AS A MEANS OF TITLE 24 COMPLIANCE

2.1. Beginning October 1, 2005, when "alterations" are made to HVAC systems in conventional homes located in climate zones 2 & 9-16, the requirements for duct testing and duct sealing outlined below apply.

2.2. HVAC Contractors must:

[1] Although Duct Testing and Sealing is a single measure, there are separate WIS sections for Duct Testing (Sec. 10) and Duct Sealing (Sec. 20). The Preface Pages are identical in both WIS Sections (10 and 20).

a. Ensure that duct leakage is at an acceptable level—which involves duct testing and, as needed, duct sealing, or
b. Utilize a Title 24 High Efficiency Alternative in lieu of duct testing & sealing.

2.3. When duct testing and sealing is performed:
a. All accessible ducts must be sealed by the HVAC Contractor, and
b. A minimum of 1 in 7 of each contractor's completed installations must be verified by a HERS Rater to be in compliance with Title 24 Standards. However, Title 24 gives the homeowner the option to request HERS verification for his/her home, rather than being part of a 1-in-7 sample.

2.4. Exceptions: Duct testing and sealing requirements do not apply when:
a. Total length of ducts located in unconditioned space is less than 40 linear feet.
b. Ducts are constructed, insulated, or sealed with asbestos.
c. Ducts have been previously verified by a HERS rate to be incompliance with Title 24.

2.5. HERS verification of duct testing and sealing is tied to the building permit process. Under Title 24, a building permit for an HVAC alteration cannot be finalized until a form CF-6R has been completed and submitted to the HERS rater and a form CF-4R is completed by a HERS Rater and submitted to the Building Department.

2.6. The Title 24 definition of an HVAC "alteration" is:
a. Installation or replacement of an HVAC unit (central furnace and/or air conditioner or heat pump), or
b. Replacement of any of the following major HVAC components (the entire component, not a part within the component):
- Air handler
- Condenser (outdoor unit)
- Indoor coil
- Furnace heat exchanger
- More than 40 feet of new ductwork in unconditioned space

2.7. By contrast, a "repair" is servicing an HVAC unit or fixing/replacing a defective part within a major component—such as the fan motor or blade within the air handler, or the compressor or cooling fan motor or blade within the condenser (outdoor unit). "Repairs" are not within the scope of Title 24 standards and do not mandate duct testing and sealing.

2.8. When Title 24 duct testing and duct sealing is required, final duct leakage must be in conformance with the following criteria:

a. Measured duct leakage shall be less than 15% of fan flow (airflow), or
b. Measured duct leakage shall be reduced by more than 60% compared to measured duct leakage prior to the alteration, with visual inspection and smoke test by a HERS Rater performed to verify that all accessible leaks have been sealed.

2.9. If it is not possible to meet the duct sealing options a. or b. listed above:
a. All accessible duct leaks shall be sealed, and
b. A HERS Rater shall verify that all accessible leaks have been sealed by performing a visual inspection and a smoke test.

2.10. When an option listed in item 2.8 is utilized, conformance with Title 24 duct leakage criteria must be verified by a HERS Rater for a minimum of 1 in 7 jobs completed by each HVAC contractor. However, Title 24 gives the homeowner the option to request HERS verification for his/her home, rather than being part of a 1-in-7 sample.

2.11. When leaks are sealed per item 2.9, 100% HERS verification is required.

SECTION 11 PREFACE
FOR
EXTERIOR DOOR REPLACEMENT

1. INSTALLATION POLICIES

1.1. There are no standard installation policies for this measure.

SECTION 12 PREFACE
FOR
WINDOW REPLACEMENT

1. INSTALLATION POLICIES

1.1. All window replacements require written pre-approval from the LIEE Program Manager.

SECTION 13 PREFACE

FOR

GLASS REPLACEMENT

1. INSTALLATION POLICIES

1.1. When only one pane in a dual pane window is cracked, the unit does not require repair/replacement.

1.2. If one pane is completely broken and has shards, then all shards must be removed.

1.3. Polycarbonate glazing is allowed only with written pre-approval from the LIEE Program Manager.

SECTION 14 PREFACE

FOR

THREAD-BASED COMPACT FLUORESCENT LAMPS (CFLs)

1. INSTALLATION POLICIES

1.1. A maximum of five CFLs may be installed in any home.

SECTION 15 PREFACE

FOR

HARD-WIRED COMPACT FLUORESCENT FIXTURES

1. INSTALLATION POLICIES

1.1. This measure is limited to the installation of hard-wired compact fluorescent porch light fixtures.

1.2. Hard-wired compact fluorescent porch light fixtures may be installed only in single family non-mobile homes.

1.3. No more than an average of three fixtures may be installed.

1.4. Replaced porch light fixtures may be left with the customer or the property manager only if requested.

SECTION 16 PREFACE
FOR
EVAPORATIVE COOLER INSTALLATION

1. INSTALLATION POLICIES

1.1. Customer must have an operational refrigerated air conditioning unit.

1.2. For single family homes and mobile homes, evaporative coolers are available only in CEC Climate Zones 10–16.

1.3. Evaporative coolers may not be installed in multi-family homes.

SECTION 17 PREFACE

FOR

REFRIGERATOR REPLACEMENT

1. INSTALLATION POLICIES

1.1. The minimum size for primary refrigerators replaced under the LIEE Program is 10 cubic feet.

1.2. One of the refrigerators replaced under the Program must be a primary refrigerator. The primary refrigerator is the main refrigerator in the home, usually the kitchen refrigerator.

1.3. The size of the replacement refrigerator shall be approximately equal to the size of the existing unit. When two refrigerators and/or freezers are exchanged for a single unit, the replacement unit may <u>not</u> be larger than the combined size of the two existing units, and may not be larger than 23 cubic feet.

1.4. Space must be physically large enough to accommodate the new refrigerator, with entrance and passageways sufficient to allow removal of the existing refrigerator.

1.5. Contractor shall dispose and recycle (de-manufacture) replaced refrigerators in an environmentally safe manner and in accordance with federal, state, and local regulations and codes. Contractor represents that it has knowledge of the Metal Discard Act, effective January 1, 1994, which prohibits disposal of refrigerators/freezers in landfills.

SECTION 18 PREFACE

FOR

NATURAL GAS CENTRAL FORCED AIR HEATING SYSTEM REPAIR AND REPLACEMENT

1. FURNACE REPAIR/REPLACEMENT POLICIES

1.1. Furnace repair or replacement may be provided only when the appliance fails NGAT, and correction cannot be achieved with Service/Adjustment[1] by utility gas service personnel (or their designated representative). Note that NGAT fails include the following two scenarios:

- The furnace is non-operable.
- No furnace is present and the household uses another gas appliance for space heating.

1.2. Furnace replacements and major furnace repairs may be provided only if the residence is owner-occupied. Service/Adjustment may also be conducted in renter-occupied homes.

1.3. Furnace repairs and replacements will be provided only if the fuel used by the furnace is supplied by the utility providing LIEE Program services.

1.4. Furnace replacement will not include hazardous material abatement, major structural alteration, concrete work, painting, or floor covering.

1.5. A central furnace may be repaired only if the cost of repairing the unit would be less than 50% of the cost of replacement. A wall, floor, or direct vent furnace may be repaired only if the cost of repairing the unit would be less than 25% of the cost of replacement.

1.6. An air conditioning unit may be replaced in conjunction with a furnace replacement if:

- The unit being replaced is a combined forced air heating and central AC package system, also referred to as a dual-pack (i.e., the AC and furnace is manufactured as one unit and is housed in a single sheet metal housing); or
- The furnace being replaced is part of a split forced air heating and AC system and the AC evaporative coil and/or the outside system cannot be

[1] See Definitions

matched with the new furnace. However, AC replacement must not require refrigerant line replacement.

1.7. Replaced units must be de-manufactured in compliance with all laws and regulations.

1.8. Installer must have C-20 HVAC license.

1.9. A furnace will not be replaced if Title 24 provisions relating to alterations cannot be satisfied.

1.10. A furnace that is not abandoned or inaccessible and that cannot be made operable through Servicing fails NGAT.

2. PROGRAMMABLE THERMOSTAT INSTALLATION POLICIES

2.1. A programmable thermostat may be installed only if (a) a central furnace or central air conditioner is *replaced*, or (b) a central furnace or central air conditioner is *repaired* and a properly-functioning thermostat is not present.

2.2. Before installing a programmable thermostat, Contractor shall explain its operation and provide the customer an opportunity to refuse the measure.

3. CENTRAL SYSTEM HVAC FILTER INSTALLATION POLICIES

3.1. HVAC filters may be replaced only as part of central furnace repair or central air conditioner replacement.

3.2. Contractors must show customers how to remove, clean, and re-install the filters.

SECTION 19 PREFACE
FOR

NATURAL GAS WALL AND FLOOR FURNACE REPAIR AND REPLACEMENT

1. FURNACE REPAIR/REPLACEMENT POLICIES

1.1. Furnace repair or replacement may be provided only when the appliance fails NGAT, and correction cannot be achieved with Service/Adjustment[1] by utility gas service personnel (or their designated representative).

- The furnace is non-operable.
- No furnace is present and the household uses another gas appliance for space heating.

1.2. A furnace may be replaced only if the cost of repairing the unit would be more than 25% of the cost of replacement.

1.3. Furnace repair or replacement may be provided only if the residence is owner-occupied. Service/Adjustment may also be conducted in renter-occupied homes.

1.4. Furnace repairs and replacements will be provided only if the fuel used by the furnace is supplied by the utility providing the LIEE Program services.

1.5. Furnace replacement will not include hazardous material abatement, major structural alteration, concrete work, painting, or floor covering.

1.6. A furnace that is not abandoned or inaccessible and that cannot be made operable through Servicing fails NGAT.

1.7. Installer must have a C-20 HVAC license.

[1] See Definitions

SECTION 20 PREFACE
FOR
DUCT SEALING

1. INSTALLATION POLICIES FOR DUCT TESTING AND SEALING AS A FREE-STANDING MEASURE[1]

1.1. Duct testing and sealing as a measure will be offered only in Single Family and Mobile Homes.

1.2. Duct testing and sealing as a measure will be offered in all Climate Zones for Homes with Natural Gas Space Heating provided by the IOU.

1.3. For homes with electric space heat provided by the IOU, duct testing and sealing as a measure will be offered only in Climate Zones 10-16.

1.4. In order to be considered as a Program measure, the potential for duct leakage reduction must be at least 13% of total fan flow (airflow).

1.5. For a duct system to be considered sealed, (a) the duct leakage reduction must equal or exceed 13% of airflow; (b) the final duct leakage must be reduced to less than 15% of airflow, or, if this cannot be reached, (c) all accessible duct leaks must be sealed as verified by smoke tests.

1.6. Duct sealing is <u>not</u> required unless initial leakage is at least 28% of airflow.

1.7. The utility or its designee will verify initial and final duct leakage rates, in accordance with the procedures in WIS Section 10, Duct Testing Standards, and Appendix D, Methods for Estimating and Measuring Airflow.

2. INSTALLATION POLICIES FOR DUCT TESTING AND SEALING AS A MEANS OF TITLE 24 COMPLIANCE[1]

2.1. Beginning October 1, 2005, when "alterations" are made to HVAC systems in conventional homes located in climate zones 2 & 9-16, the requirements for duct testing and duct sealing outlined below apply.

2.2. HVAC Contractors must:

[1] Although Duct Testing and Sealing is a single measure, there are separate WIS sections for Duct Testing (Sec. 10) and Duct Sealing (Sec. 20). The Preface Pages are identical in both WIS Sections (10 and 20).

a. Ensure that duct leakage is at an acceptable level—which involves duct testing and, as needed, duct sealing, or
b. Utilize a Title 24 High Efficiency Alternative in lieu of duct testing and sealing.

2.3. When duct testing and sealing is performed:
a. All accessible ducts must be sealed by the HVAC Contractor, and
b. A minimum of 1 in 7 of each contractor's completed installations must be verified by a HERS Rater to be in compliance with Title 24 Standards. However, Title 24 gives the homeowner the option to request HERS verification for his/her home, rather than being part of a 1-in-7 sample.

2.4. Exceptions: Duct testing and sealing requirements do not apply when:
a. Total length of ducts located in unconditioned space is less than 40 linear feet.
b. Ducts are constructed, insulated, or sealed with asbestos.
c. Ducts have been previously verified by a HERS rate to be incompliance with Title 24.

2.5. HERS verification of duct testing and sealing is tied to the building permit process. Under Title 24, a building permit for an HVAC alteration cannot be finalized until a form CF-6R has been completed and submitted to the HERS rater and a form CF-4R is completed by a HERS Rater and submitted to the Building Department.

2.6. The Title 24 definition of an HVAC "alteration" is:
a. Installation or replacement of an HVAC unit (central furnace and/or air conditioner or heat pump), or
b. Replacement of any of the following major HVAC components (the entire component, not a part within the component):
- Air handler
- Condenser (outdoor unit)
- Indoor coil
- Furnace heat exchanger
- More than 40 feet of new ductwork in unconditioned space

2.7. By contrast, a "repair" is servicing an HVAC unit or fixing/replacing a defective part within a major component—such as the fan motor or blade within the air handler, or the compressor or cooling fan motor or blade within the condenser (outdoor unit). "Repairs" are not within the scope of Title 24 standards and do not mandate duct testing and sealing.

2.8. When Title 24 duct testing and duct sealing is required, final duct leakage must be in conformance with the following criteria:

a. Measured duct leakage shall be less than 15% of fan flow (airflow), or

b. Measured duct leakage shall be reduced by more than 60% compared to measured duct leakage prior to the alteration, with visual inspection and smoke test by a HERS Rater performed to verify that all accessible leaks have been sealed.

2.9. If it is not possible to meet the duct sealing options a. or b. listed above:

a. All accessible duct leaks shall be sealed, and

b. A HERS Rater shall verify that all accessible leaks have been sealed by performing a visual inspection and a smoke test.

2.10. When an option listed in item 2.8 is utilized, conformance with Title 24 duct leakage criteria must be verified by a HERS Rater for a minimum of 1 in 7 jobs completed by each HVAC contractor. However, Title 24 gives the homeowner the option to request HERS verification for his/her home, rather than being part of a 1-in-7 sample.

2.11. When leaks are sealed per item 2.9, 100% HERS verification is required.

SECTION 21 PREFACE

FOR

CENTRAL HIGH EFFICIENCY AIR CONDITIONER REPLACEMENT

1. CENTRAL AIR CONDITIONER REPLACEMENT POLICIES

1.1. Central air conditioner replacements will be offered only in Title 24 climate zones 14 and 15.

1.2. A programmable/setback thermostat may be installed only if a central air conditioner is replaced.

1.3. Prior to installation, contractors installing programmable thermostats shall explain their operation and provide the customer an opportunity to refuse the measure.

1.4. HVAC filters may be replaced only as part of central furnace repair or central air conditioner replacement.

1.5. Contractors who replace filters must show customers how to remove, clean and reinstall the filters.

1.6. Replacement of refrigerant line sets is beyond the scope of this Program.

SECTION 22 PREFACE

FOR

HIGH EFFICIENCY WINDOW/WALL AIR CONDITIONERS

1. INSTALLATION POLICIES

1.1. Replacement unit must have a minimum EER of 10.7.

1.2. High efficiency window/wall air conditioners may be installed only in CEC Climate Zones 10-15.

1.3. Replaced units must be de-manufactured in compliance with all laws and regulations.

1.4. All units must be adequately supported and braced.

SECTION 25 PREFACE

FOR

NATURAL GAS WATER HEATER REPLACEMENT

1. WATER HEATER REPAIR/REPLACEMENT POLICIES

1.1. Water heater repair or replacement may be provided only: (a) when the appliance fails NGAT, and correction cannot be achieved with Service/Adjustment[1] by utility gas service personnel (or their designated representative), or (b) if the tank leaks.

1.2. A water heater may be repaired only if the cost of repairing the unit would be less than 50% of the cost of replacement.

1.3. Water heater replacement and major repairs may be provided only if the residence is owner-occupied. Service/Adjustment may also be conducted in renter-occupied homes.

1.4. Water heater repairs and replacements will be provided only if the fuel used by the appliance is supplied by the utility providing LIEE Program services.

1.5. Water heater replacement will not include hazardous material abatement, major structural alteration, concrete work, painting, or floor covering.

[1] See Definitions

SECTION 29 PREFACE
FOR

NATURAL GAS APPLIANCE TESTING (NGAT)

1. INSTALLATION POLICIES

1.1. Natural gas appliance testing will be conducted only for homes that receive infiltration reduction measures and that have at least one natural gas appliance affecting the living space. (Appliances affecting the living space are those identified as such in this section of this WIS manual.) In addition, the repair and replacement of a natural gas furnace or water heater involves appliance testing.

1.2. Homes with non-IOU (e.g., propane) space heating fuel:

1.2.1. Homes with non-IOU (e.g., propane) space heating fuel are <u>not</u> eligible for natural gas appliance testing nor infiltration reduction measures. Homes with IOU space heating but which use a non-IOU combustion fuel for another appliance (say, water heating) are also ineligible for NGAT due to the inability of the IOUs to service combustion appliances using non-IOU fuels. The IOU will refer these homes to local LIHEAP agencies to conduct testing and do any repairs or replacement of non-IOU combustion fuel appliances and charge such services to the LIHEAP agencies' CSD-funded weatherization programs. Whether the LIHEAP agencies would also install infiltration reduction measures, or any other weatherization measures under their LIHEAP programs, would be subject to voluntary agreements freely entered into by the IOUs and the local LIHEAP agencies.

1.2.2. Any agreement between an IOU and a local LIHEAP agency which does not contract with that IOU to provide weatherization services under the IOU's LIEE program will be voluntarily negotiated on a case-by-case basis, given different geographic areas served, and different situations which might occur in different parts of each IOU's service area.

1.2.3. In any part of a given IOU service area where the local LIHEAP agency chooses NOT to enter into such an agreement, the IOU will continue to install all feasible non-infiltration weatherization measures under its LIEE program, then refer customers to the local LIHEAP agency if they want to have their non-IOU fuel combustion appliances tested, repaired or replaced, and/or want to have infiltration reduction measures installed by the LIHEAP agency.

1.3. In order to avoid cases in which post-weatherization NGAT protocol would discover nonconforming conditions that: (a) preclude installation of infiltration reduction measures, and (b) cannot be corrected within the scope of the program,

some pre-weatherization evaluations of gas appliances are performed as part of the initial home assessment. Pre-weatherization appliance evaluations include the following components:

- Gas Leaks. Each gas-burning appliance is checked for the presence of gas leaks. When a natural-gas leak is found, the utility is contacted for gas service repairs. Non-IOU gas leaks are treated in accordance with utility-specific policies. All gas leaks must be repaired before weatherization commences.
- Combustion and Ventilation Air (CVA) Evaluations. CVA is evaluated for furnaces and water heaters to determine if it is adequate and, if inadequate, whether correction is feasible/possible.
- Flue and Vent Pipe Termination Evaluations. Flue and vent pipe terminations are checked to determine if any violate NGAT criteria and, if nonconforming, whether correction is feasible.
- Appliance Operation and Accessibility. All gas-burning appliances are checked to determine whether: (a) they are accessible for testing, and (b) they are operable. Non-operable natural gas appliances are referred to the appropriate utility service department. Non-operable propane appliances are treated in accordance with utility-specific policies.
- Unvented Space Heater. The dwelling is checked for presence of an unvented combustion appliance used for heating the living space (which will preclude installation of infiltration reduction measures if not removed/eliminated).
- Whole House Fan. When a whole house fan exhausting into the attic is present, the attic is checked for the presence of a gas water heater or gas furnace with standing pilot (which will preclude installation of infiltration reduction measures).
- Gas Clothes Dryer. If located within the living space, the clothes dryer moisture exhaust is checked to determine if it is properly vented outdoors. If not properly vented outdoors, infiltration reduction measures will not be installed. This restriction does not apply to a gas clothes dryer located in an attached garage.
- Gas Range with Heater/Incinerator. When a gas range has a built-in space heater and/or incinerator, if the appliance is not properly vented outdoors, infiltration reduction measures will not be installed.[1]
- Water Heater in Bedroom. If an open combustion water heater is present in a sleeping area, infiltration reduction measures will not be installed.[1]

Required corrections will be performed before weatherization commences. The owner will be informed of conditions that preclude installation of infiltration reduc-

[1] This condition precludes installation of infiltration reduction measures.

tion measures and cannot be remedied by the LIEE program (e.g., exhausting clothes dryers outdoors, and repair or replacement of appliances and gas vents for which repair or replacement is not available).

1.4. After completion of weatherization that includes infiltration reduction measures, NGAT is performed for all natural gas appliances affecting the living space. Testing of appliances using non-IOU fuels is conducted in accordance with utility-specific policies (see 1.2 and 1.5). NGAT includes the following components:

- Visual Examinations, including flue and vent system checks, appliance component checks, re-check for gas leaks, inoperable or inaccessible appliances, nonconforming appliances, and whole house fan vented into the attic; and check for properly-blocked fireplace damper if gas log is used as the primary heat source.
- Combustion and Ventilation Air (CVA) Verification.
- Ambient Carbon Monoxide Tests, as prescribed in 1.5.
- Draft Tests, using smoke, on appliances for which draft tests are applicable (e.g., open combustion natural draft space- and water-heating appliances).

1.5. For IOU-fueled gas appliances (appliance using natural gas provided by SDG&E, PG&E, or So Cal Gas), ambient CO Testing will be conducted using the following protocol:

- Space Heating Appliances: Appliance ambient CO test is performed for all space heating appliances.
- Water Heaters: Appliance ambient CO test is performed if the water heater is in a location affecting the living space.
- Cooking Appliances: Room ambient CO tests are performed in the kitchen separately during operation of each cooking appliance component (cook top, oven, and broiler).
- Gas Logs: Exhaust/gas CO test is performed inside the top edge of the fireplace opening.
- Clothes Dryers: No CO tests are performed.

1.6. If a problem is identified through application of the overall NGAT protocol, (i.e., elevated CO, inadequate draft, or defect causing an unsafe condition), the case will be referred for resolution to qualified utility-trained personnel or a contractor licensed to repair appliances. Such resolution may involve the use of flue CO testing as well as other procedures.

1.7. Timing of combustion appliance testing will be as follows:

1.7.1. Homes with Natural Gas Appliances

For homes other than those using non-IOU combustion fuels with natural gas appliances, combustion appliance testing post-weatherization NGAT protocol is conducted <u>after</u> weatherization.

Post-weatherization NGAT shall be conducted within five (5) working days from the date that infiltration reduction measures are installed.

1.7.2. Homes for which Infiltration Reduction is Simulated

Temporary sealing/blocking of defective windows and doors, in order to perform post-weatherization NGAT, is allowed when required materials (such as specialty glass or special-order windows or doors) are not available to be installed concurrently with the other weatherization measures. NGAT will be conducted with the defect sealed/blocked (e.g., with plastic sheeting) to simulate infiltration reduction achieved by the completed window/door repair/replacement. A repeat of NGAT following the completed repair/replacement is <u>not</u> required.

1.8. The following actions will be taken when appliances fail NGAT:

- In owner-occupied homes, natural gas space heaters and water heaters failing one or more of the tests covered by the NGAT protocol will be provided with Service/Adjustment and, if necessary, will be repaired or replaced in accordance with Program P&P. The absence of a furnace in cases where another gas appliance is used for space heating will constitute an NGAT fail.
- In owner-occupied homes, natural gas water heaters failing one or more of the tests covered by the NGAT protocol will be provided with Service/Adjustment and, if necessary, will be repaired or replaced subject to Program P&P.
- In owner-occupied homes, non-program appliances (appliances for which LIEE repair or replacement is not feasible) failing one or more of the tests covered under the NGAT protocol will be provided with Service/Adjustment. If Service/Adjustment does not correct the problem, the appliances in question will be tagged, shut off, and/or capped and reported to the owner.
- In renter-occupied homes, appliances failing one or more of the tests covered by the NGAT protocol will be provided with Service/Adjustment. If Service/Adjustment does not correct the problem, the appliance be will be tagged, shut off, and/or capped and reported to the tenant and the landlord.

NONFEASIBILITY CRITERIA FOR CAULKING

1. **The existing caulk is functioning properly, even if not installed in accordance with current Installation Standards.**
2. **Crack does not penetrate the building envelope.**
3. **Crack/gap too wide to be caulked (wider than 5/8") and must be repaired/patched.**
4. **Customer refuses.**

NONFEASIBILITY FOR WEATHERSTRIPPING DOORS

1. **The existing weatherstripping is functioning properly, even if not installed in accordance with current Installation Standards.**
2. **Door is located between two conditioned or two unconditioned spaces.**
3. **Door is in a multi-unit dwelling and separates the living space from a heated hallway.**
4. **Door and/or frame is labeled to have a fire rating <u>greater than</u> 20 minutes.**
5. **Functional storm door is present.**
6. **Customer refuses.**

NONFEASIBILITY FOR WEATHERSTRIPPING APPLIANCE CLOSET DOORS

1. **Combustion appliance receives air from conditioned space (i.e. combustion air grilles present in the enclosure door or wall).**
2. **Inadequate combustion air (as defined in Appendix A) is being supplied to the appliance.**

NONFEASIBILITY CRITERIA FOR CEILING INSULATION

1. The existing insulation level precludes raising the R-value (see table below):

CLIMATE ZONE*	EXISTING INSULATION LEVEL**
CEC Climate Zones 2 through 15	More than R-11
CEC Climate Zones 1 and 16	More than R-19

* Reference is to the final level of insulation (any pre-existing R-value plus insulation added under the Program).

** See Policies & Procedures manual, Section 7.3.4.

2. The roof is leaky or shows signs of water damage from leaks that have not been repaired.

3. Adequate venting is not present and cannot be installed per Attic Ventilation Standards (Section 4).

4. Hazardous electrical wiring or other hazardous conditions are present.

5. An enclosed cavity is present.

6. Exhaust vents terminating in the attic cannot be vented to the outside.

7. Disconnected or damaged space heating/cooling ducts are present and cannot be repaired.

8. Attic accessibility is inadequate:
   - An inspector can not gain safe physical access to all treated areas of the attic after insulation is installed.
   - Clearance between top of ceiling joists and bottom of ridge board is less than 24 inches.
   - Structural obstructions, such as cross members of truss systems, provide an opening of less than 18 inches.
   - Access requires crawling over/under HVAC ducts, and clearance is less than 18 inches.

9. **The structure is unsound and will not support the weight of the insulation and installer, such as:**
   - **2" x 4" @ greater than 24" OC.**
   - **Bowed and sagging joists.**
   - **Fiberboard ceiling material.**
   - **1/4" gypsum ceiling.**

10. **Knob-and-Tube (K&T) Wiring is present and:**
    - **Functioning knob-and-tube wiring cannot be certified safe by a C-10 contractor.**
    - **Abandoned K&T wiring is present that cannot be disconnected and certified as abandoned by a C-10 contractor.**
    - **Insulation over K&T wiring (live or abandoned) is prohibited by local code.**

11. **Customer refuses.**

NONFEASIBILITY CRITERIA FOR ATTIC VENTING

1. **The existing venting already meets Installation Standards.**
2. **Tiled hip roof without overhang, soffit, or accessible frieze blocks.**
3. **Ceiling insulation is nonfeasible.**
4. **Roof-mounted vents are the only option for adding venting, but the roof is tile, wood shingles, or in poor condition (e.g., more than three layers of roofing, roof unable to support additional vents).**
5. **Roof is a flat and/or built-up roof[1] .**
6. **Customer refuses.**

---

[1] **See Definitions**

NONFEASIBILITY CRITERIA FOR WATER HEATER INSULATION

All Water Heaters

1. The existing blanket is functioning properly, even if not installed in accordance with current Installation Standards.
2. External insulation is specifically prohibited by the manufacturer.
3. T&P relief valve, or gas shutoff valve, is not present, or is not located within 6" of the tank.
4. T&P valve outlet is plugged or capped.
5. Tank is exposed to weather.
6. Leak present in tank or water pipes.
7. Plastic piping (e.g., CPVC) is present in the cold or hot water line to/from the tank.
8. Tank is located within 12" of a stove, range, or cooktop.
9. Tank capacity is greater than 100 gallons.
10. Customer refuses.

Gas Water Heaters

1. Perimeter clearances prior to blanket installation are less than 4" between tank and door and less than 1" on sides and back.
2. *Gas leak present.
3. *Vent pipe and/or draft hood not properly installed, including:
   - No draft hood present.
   - Two draft hoods present.
   - Vent pipe defective or missing.
4. *Evidence of improper combustion and/or venting exists as characterized by:
   - Large accumulation of soot near draft hood or on floor underneath.
   - Scorching at draft hood or combustion chamber.

---

*When these conditions exist, contact the designated utility personnel.

5. **No appliance line valve (gas shutoff valve) present.**

6. ***Combustion air supply improper or inadequate as characterized by:**
   - **The absence of <u>both</u> low and high vents (when required).**
   - **Vent size too small.**
   - **Room volume is inadequate.**
   - **Customer refuses modifications needed to create adequate combustion air supply.**

7. ***Both burner access doors missing.**

8. **Internal insulation is R-12 or greater.**

<u>Electric Water Heaters</u>

1. **Perimeter clearances prior to blanket installation are less than 1" on the front, sides and back.**

2. **Hazardous electrical wiring/conditions are present.**

3. **Thermostat cover plate(s) not present.**

4. **Internal insulation is R-16 or greater.**

***When these conditions exist, contact the designated utility personnel.**

NONFEASIBILITY CRITERIA FOR WATER HEATER PIPE INSULATION

1. **The existing pipe insulation is functioning properly, even if not installed in accordance with current Installation Standards.**
2. **An unsafe condition is present that causes tank insulation to be nonfeasible.**
3. **Leak present in tank or water pipes.**
4. **T&P relief valve, or gas shutoff valve, is <u>not</u> present, or is <u>not</u> located within 6" of the tank.**
5. **T&P valve outlet is plugged or capped.**
6. **Water heater pipes are exposed to the elements (especially sunlight, which can quickly degrade the insulation).**
7. **Less than 1 foot of continuous insulation can be installed.**
8. **Plastic piping (e.g. CPVC) is present in the cold or hot water tank lines to/from the tank.**
9. **Pipes are inaccessible, or the configuration prevents proper installation.**
10. **Customer refuses.**

NONFEASIBILITY CRITERIA FOR COVER PLATE GASKETS

1. **Evidence of electrical malfunction or hazard, such as:**
   - **Electrical box <u>not</u> permanently attached.**
   - **Loose electrical connection.**
   - **Signs of burning or charring or other evidence of hazardous wiring condition.**

2. **Gaskets are already present, even if not installed in accordance with current Installation Standards.**

3. **Cover plate located on a wall between two conditioned or two unconditioned areas.**

4. **Cover plate located behind furniture or major appliances that are too fragile or too heavy to move.**

5. **Removal of the cover plate will damage the wall surface (paint, wallpaper, etc.).**

6. **Utility box is an odd size and standard gaskets will not work.**

7. **Customer refuses.**

NONFEASIBILITY CRITERIA FOR ENERGY-SAVER SHOWERHEADS

1. **Existing showerhead(s):**
   - **Have a flow rate less than or equal to 3.0 gpm.**
   - **Are functioning properly, even if not installed in accordance with current Installation Standards.**
   - **Are required for medical reasons.**

2. **Existing showerarm:**
   - **Is made of plastic (including ball joint, i.e., for Price Pfister®).**
   - **Is cracked, broken, or missing.**
   - **Requires removal.**

3. **Shower is <u>not</u> mechanically functional.**

4. **Standard metal adapters (i.e., American Standard®, Gerber®, and Price Pfister®) will not work.**

5. **Piping is in such poor condition that showerhead installation could cause plumbing problems.**

6. **Customer refuses.**

NONFEASIBILITY CRITERIA FOR FAUCET AERATORS

1. **The aerator is functioning properly, even if not installed in accordance with current Installation Standards.**

2. **Faucet has special fitting for attaching appliance (e.g., portable dishwasher).**

3. **Faucet does <u>not</u> provide hot water.**

4. **The faucet or faucet threads are found to be damaged and/or leaky.**

5. **Removal of the existing aerator is likely to cause damage to the aerator or the faucet.**

6. **Standard aerators will <u>not</u> fit.**

7. **Customer refuses.**

NONFEASIBILITY CRITERIA FOR EVAPORATIVE COOLER COVERS

1. An existing evaporative cooler cover is functioning properly, even if not installed in accordance with current Installation Standards.
2. The evaporative cooler is ducted with multiple supply vents/registers and it is impossible for all of them to be equipped with covers.
3. Water damage to the ceiling or wall area around the vent/register is evident, prevents proper cover installation, and cannot be repaired.
4. Vent/register opening is so close to the wall or ceiling that proper installation of the cover is impossible.
5. The vent(s) serving the evaporative cooler is (are) shared with a heating system.
6. Electrical wiring/plug/receptacle interferes with proper installation, and furring is not a feasible option.
7. External cover is already present.
8. Customer refuses installation of evaporative cooler vent covers.

NONFEASIBILITY CRITERIA FOR WALL AND WINDOW AIR CONDITIONER UNIT COVERS

1. An existing air conditioner vent cover is functioning properly, even if not installed in accordance with current Installation Standards.
2. Water damage to the window or wall area around the unit/vent is evident, prevents proper cover installation, and cannot be repaired.
3. The vent/unit is so close to the wall that proper installation of the cover is impossible.
4. Customer refuses.

NONFEASIBILITY CRITERIA FOR DUCT TESTING

1. **Ductwork contains excessive damage or deterioration that would preclude proper testing.**
2. **If the replacement of 40 or more feet of duct in unconditioned space would be necessary.**
3. **Ductwork contains or is made of asbestos.**
4. **Ductwork is insulated or sealed with asbestos.**
5. **Ductwork is inaccessible or an unsafe condition exists, causing duct testing to be unfeasible.**
6. **A hazardous condition exists requiring repair or replacement per NGAT policy, and repair/replacement is not feasible.**
7. **Forced air heating unit is inoperative and cannot be repaired.**
8. **Forced air heating unit is abandoned or inaccessible.**
9. **Customer refuses.**

NONFEASIBILITY CRITERIA FOR DOOR REPLACEMENT

1. **Door can be repaired rather than replaced.**
2. **Door is structurally sound and provides an adequate barrier to infiltration.**
3. **Door jamb is not structurally sound and cannot be repaired or replaced within the Minor Home Repair CAP.**
4. **Customer refuses.**

NONFEASIBILITY CRITERIA FOR WINDOW REPLACEMENT

1. **The window can be repaired rather than replaced.**
2. **The window is structurally sound and provides an adequate barrier to infiltration.**
3. **Window is located above the first floor of a structure and installation will present unsafe working conditions.**
4. **Customer refuses.**

NONFEASIBILITY CRITERIA FOR GLASS REPLACEMENT

1. **Small hole, 1/4" or less, is present and can be patched with clear silicone or clear glass repair tape.**
2. **There is only one crack less than 6" long, extending from edge to edge, that cannot come loose from the frame to pose a safety hazard.**
3. **Complete window will be replaced.**
4. **Customer refuses.**

NONFEASIBILITY CRITERIA FOR THREAD-BASED COMPACT FLUORESCENT LAMPS

1. **Socket/fixture is nonfunctional.**
2. **Fixture already has a functional CFL.**
3. **Hazardous conditions exist at the socket/fixture.**
4. **Circuit is controlled by a solid-state timer.**
5. **Circuit is controlled by a dimmer not compatible with available CFL's.**
6. **Fixture is located in a storage room, closet, or multifamily common area.**
7. **Fixture is not operable by the customer (i.e., on their electric meter/bill).**
8. **Customer refuses.**

NONFEASIBILITY CRITERIA FOR HARD-WIRED COMPACT FLUORESCENT PORCH LIGHT FIXTURES

1. **Existing location of the fixture is not suitable.**
2. **A thread-based CFL will fit in the existing fixture.**
3. **Electrical box is substandard and/or cannot be properly secured.**
4. **Wiring is substandard, in a deteriorated condition, and/or rewiring is necessary.**
5. **Circuit does not operate properly (e.g., defective switch).**
6. **Circuit is controlled by a solid-state timer.**
7. **Circuit is controlled by a dimmer not compatible with available hard-wired CFL fixtures.**
8. **Existing fixture is in a wet location and a grounding conductor is not available.**
9. **Existing fixture is not on the customer's electric meter/bill.**
10. **Customer refuses.**

NONFEASIBILITY CRITERIA FOR WINDOW/WALL EVAPORATIVE COOLER INSTALLATION

1. **The existing cooler is operational.**
2. **Proper electrical service is not present.**
3. **Proper exhaust ventilation is <u>not</u> available.**
4. **Substandard wiring exists (e.g., ungrounded outlets, decayed insulation, or exposed wires).**
5. **No feasible window or wall location available.**
6. **Exterior clearance requirements cannot be met.**
7. **Egress requirements cannot be met.**
8. **Wood windows are decayed or deteriorated.**
9. **Siding is decayed or damaged.**
10. **Customer refuses.**

NONFEASIBILITY CRITERIA FOR REFRIGERATOR REPLACEMENT

1. **Any refrigerator to be removed was manufactured after 1992.**
2. **The electrical outlet used by the existing refrigerator is not properly grounded and cannot be properly grounded.**
3. **The refrigerator is not accessible for removal (e.g., doors from room are too small, refrigerator is encased in tile).**
4. **Floor is not level and cannot safely support a new refrigerator.**
5. **Hazardous electrical conditions exist at the outlet used by the existing refrigerator.**
6. **Customer refuses.**

NONFEASIBILITY CRITERIA FOR CENTRAL FORCED AIR FURNACE REPAIRS AND REPLACEMENTS

1. The existing furnace is inaccessible[1].
2. The property is renter-occupied.
3. Fuel used by the existing unit is not supplied by the utility providing LIEE Program services.
4. Ducts cannot be brought into compliance with the Duct Sealing Standards (Section 20).
5. No furnace is present and no natural gas line or electrical outlet is available to accommodate the installation of a furnace.
6. Customer refuses.

NONFEASIBILITY CRITERIA FOR CENTRAL FORCED AIR FURNACE REPLACEMENT

1. The existing furnace can feasibly be repaired per the Program P&P.
2. For roof-mount unit, roof is not structurally adequate to support the installation.
3. Adequate access and/or combustion air cannot be provided.
4. Disconnected or damaged space heating ducts are present and cannot be repaired.

NONFEASIBILITY CRITERIA FOR CENTRAL FORCED AIR FURNACE REPAIR

1. Repair cost exceeds guidelines of Program P&P (e.g., cost to repair is more than 50% of the cost to replace the unit).

---

[1] See Definitions

NONFEASIBILITY CRITERIA FOR CENTRAL AIR CONDITIONER REPLACEMENT

1. Heating system can be repaired with existing refrigeration equipment intact.

2. For roof-mount unit, roof is not structurally adequate to support the installation.

3. Electrical service requirements cannot be met.

4. System air flow is inadequate.

5. Split system refrigerant line set is inadequate.

NONFEASIBILITY CRITERIA FOR REPAIR/ REPLACEMENT REQUIRING ATTIC OR CRAWL SPACE ACCESS

1. Crawl clearance is inadequate:
   - Attic clearance is less than 24" between top of ceiling joists and bottom of ridge board.
   - Under-floor clearance is less than 18" from the ground to bottom of floor joist system.

2. Any of the following conditions is present in the crawl space area where access is required:
   - Hazardous insect or pest infestation.
   - Excessive ground moisture (standing water or mud).
   - Sewage waste is on the ground or other unsanitary condition is present which poses a health and safety hazard.

NONFEASIBILITY CRITERIA FOR PROGRAMMABLE THERMOSTATS

1. The furnace is not being replaced or repaired.

2. The furnace is being repaired, and a properly functioning thermostat is present.

3. Already present and operational.

4. Customer refuses.

NONFEASIBILITY CRITERIA FOR HVAC AIR FILTER REPLACEMENT

1. **The furnace will not be repaired.**
2. **A serviceable filter is already present.**
3. **The types of filters provided by the Program are specifically prohibited by the appliance manufacturer.**
4. **Filter replacement would require removal of a flue, duct, or pipe.**
5. **The proper filter support or retaining device is not present, and installation is not feasible.**

NONFEASIBILITY CRITERIA FOR WALL AND FLOOR FURNACE REPAIR AND REPLACEMENT

1. **Repair cost exceeds guidelines of Program P&P (e.g., cost to repair is more than 25% of the cost to replace the unit).**
2. **Adequate access and/or combustion air cannot be provided.**
3. **Existing open combustion appliance is in a location prohibited by the replacement unit instructions or local code, and relocation to an approved location is not feasible.**
4. **Customer refuses.**

NONFEASIBILITY CRITERIA FOR INSTALLATION OR REPAIRS REQUIRING CRAWL SPACE ACCESS

1. **Crawl space clearance is less than 18" from the ground to the bottom of the floor joist system.**
2. **Any of the following conditions is present in the crawl space area where access is required:**
   - **Hazardous insect infestation.**
   - **Excessive ground moisture (standing water or mud).**
   - **Sewage waste on ground or other unsanitary conditions posing a health and safety hazard.**

NONFEASIBILITY CRITERIA FOR DUCT SEALING

1. **Duct leakage is below the threshold leakage per the Duct Testing and Sealing Form.**

2. **Replacement of 40 or more feet of duct in unconditioned space would be necessary.**

3. **A natural gas appliance hazard exists, and repair is not feasible.**

4. **Duct system has been abandoned.**

5. **Duct system is damaged and deteriorated beyond repair.**

6. **A health or safety hazard is present, such as insect infestation, hazardous electrical wiring, or structural hazard, which prevents safe access to the duct system.**

7. **Ducts and/or components are made of or insulated with asbestos.**

8. **Ductwork is inaccessible or an unsafe condition exists, causing duct testing to be unfeasible.**
   - **Attic clearance is less than 24" between top of ceiling joists and bottom of ridge board.**
   - **Under-floor clearance is less than 18" from the ground to bottom of floor joist system.**
   - **Unsafe condition is present, such as: hazardous insect or pest infestation, excessive ground moisture (standing water or mud), sewage waste on the ground, or other unsanitary condition which poses a health and safety hazard.**

9. **Forced air heating unit is inoperable and cannot be repaired.**

10. **Forced air heating unit is abandoned or inaccessible.**

11. **Customer refuses.**

NONFEASIBILITY CRITERIA FOR CENTRAL AIR CONDITIONER REPLACEMENT

1. The existing air conditioner is not operational.
2. The central AC has a SEER greater than 9.0.
3. The property is renter-occupied.
4. Existing system is a combined HVAC unit and the unit has not passed the pre-weatherization NGAT.
5. For a roof-mounted unit, the roof is not structurally adequate to support the installation.
6. Electrical service requirements cannot be met.
7. Ducts cannot be brought into compliance with the Duct Sealing Standards (Section 20).
8. Existing HVAC unit is a combined fuel unit and the gas is not provided by one of the IOUs.
9. Duct system is inadequate.
10. Split system refrigerant line set is inadequate.
11. Customer refuses.

NONFEASIBILITY CRITERIA FOR INSTALLATION REQUIRING ATTIC OR CRAWL SPACE ACCESS

1. Crawl clearance is inadequate:
   - Attic clearance is less than 24" between top of ceiling joists and bottom of ridge board.
   - Under-floor clearance is less than 18" from the ground to bottom of floor joist system.

2. Any of the following conditions are present in the crawl space area where access is required:
   - Hazardous insect or pest infestation.
   - Excessive ground moisture (standing water or mud).
   - Sewage waste on ground or other unsanitary conditions posing a health and safety hazard.

NONFEASIBILITY CRITERIA FOR PROGRAMMABLE THERMOSTATS

1. **A programmable thermostat is already present and operational**
2. **Customer refuses.**

NONFEASIBILITY CRITERIA FOR HIGH EFFICIENCY WINDOW/WALL AIR CONDITIONERS

1. **Unit is already present and operational, and is less than 15 years old.**
2. **Electrical requirements cannot be met.**
3. **A structurally sound mounting platform and/or suitable mounting location is not available.**
4. **Customer refuses.**

NONFEASIBILITY CRITERIA FOR NATURAL GAS WATER HEATER REPLACEMENT

1. The property is renter-occupied.

2. Fuel used by the existing unit is not supplied by the utility providing LIEE Program services.

3. The existing water heater:
   -
   - Is inaccessible[1], or
   - Can be feasibly repaired (i.e., cost to repair is less than 50% of the cost to replace the unit).

4. Drain line for T&P valve or drain pan cannot be properly terminated to outdoors or to an approved indoor drain if required by local code, and a gas shutoff valve and pressure relief valve cannot be installed in lieu of a T&P valve and drain line.

5. Required access, clearance, or combustion air cannot be provided.

6. For a unit on a raised floor or in an attic: structure cannot properly and safely support the installation.

7. No suitable mounting locations for seismic bracing available.

8. A safety hazard is present which cannot be repaired (e.g., vent system defect, nonconforming gas piping).

9. A watertight pan cannot be installed under the unit when required.

10. A plumbing condition exists which prevents achieving satisfactory water pipe connections.

11. A whole house fan is present, the existing water heater is in the attic, and a closed combustion unit cannot be installed.

12. The unit is a central water heater serving more than one dwelling unit.

13. Customer refuses.

---

[1] See Definitions

NONFEASIBILITY CRITERIA FOR NATURAL GAS WATER HEATER REPAIR

1. **The property is renter-occupied.**
2. **Fuel used by the existing unit is not supplied by the utility providing LIEE Program services.**
3. **The existing water heater will be replaced.**
   - **Cost to repair is more than 50% of the cost to replace the unit.**
   - **The tank leaks.**
4. **A safety hazard is present which cannot be repaired.**
5. **Required access is not available or proper combustion air cannot be provided.**
6. **The tank is a central water heater serving more than one dwelling unit.**
7. **Customer refuses.**

NONFEASIBILITY CRITERIA FOR NGAT FOR ENTIRE DWELLING

1. **Non-IOU combustion fuel is used for space heating.**
2. **No infiltration-reduction measures are installed.**
3. **No natural gas appliance affecting the living space is present.**

NONFEASIBILITY CRITERIA FOR NGAT FOR INDIVIDUAL APPLIANCE

1. **Non-IOU combustion fuel is used.**
   - **Exception: Appliances subject to PG&E-specific policy.**
2. **Appliance is abandoned.**[1]
3. **Appliance is inaccessible.**[1]

---

[1] **See Definitions**

11. ENTRANCE DOOR BOTTOM INSTALLATIONS (continued)

- **Retractable Sweeps (Automatic Door Bottoms)**
  - **An automatic door bottom shall be installed only when:**
    - **There is no threshold over the finished floor, and/or**
    - **A shoe-and-saddle combination is not feasible.**
  - **Sweep shall seal against floor or existing threshold along entire length of gasket.**
    - ***Exception:*** **100% seal is not required at ceramic tile grout lines.**
  - **Ends of gasket shall be trimmed long enough to extend from jamb to jamb when door is closed.**
  - **Unit shall be attached securely with screws which penetrate solid wood.**
- **All Door Bottoms**
  - **Weatherstripping material shall not drag on the floor covering (wood, tile, carpet, etc.).**
  - **Unit shall be installed full length; splicing not allowed.**

AUTOMATIC DOOR BOTTOM

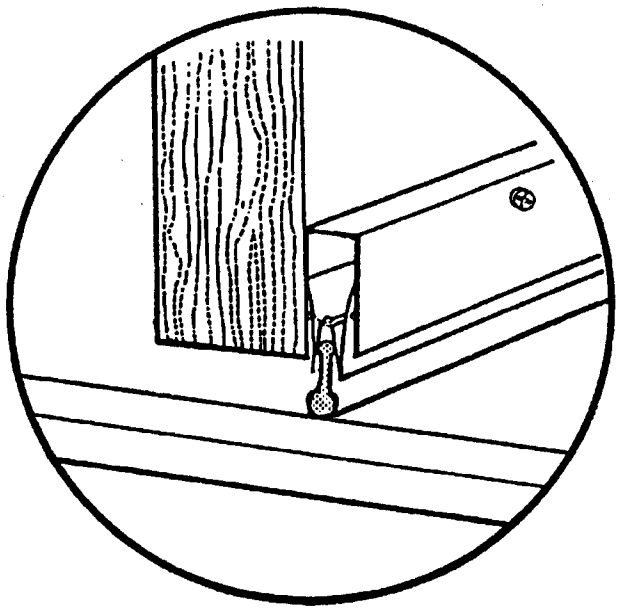

RETRACTABLE SWEEP GASKETS
MUST SEAL ALONG ENTIRE WIDTH OF DOOR

7. TEMPERATURE AND PRESSURE PROTECTION

- **All Water Heaters**
  - **Tank shall be protected by a:**
    - **Temperature and pressure (T&P) relief valve, <u>or</u>**
    - **Gas shutoff valve (e.g., a "Watts 210" valve).**
  - **T&P relief valve, or gas shutoff valve, shall be:**
    - **Present and located within 6" of the tank.**
    - **In conformance with local codes.**
  - **Valves shall <u>not</u> be covered by the blanket.**
  - **End of T&P drain line:**
    - **Shall be open and unobstructed (<u>not</u> capped or plugged).**
    - **Shall <u>not</u> be covered or obstructed by the blanket.**

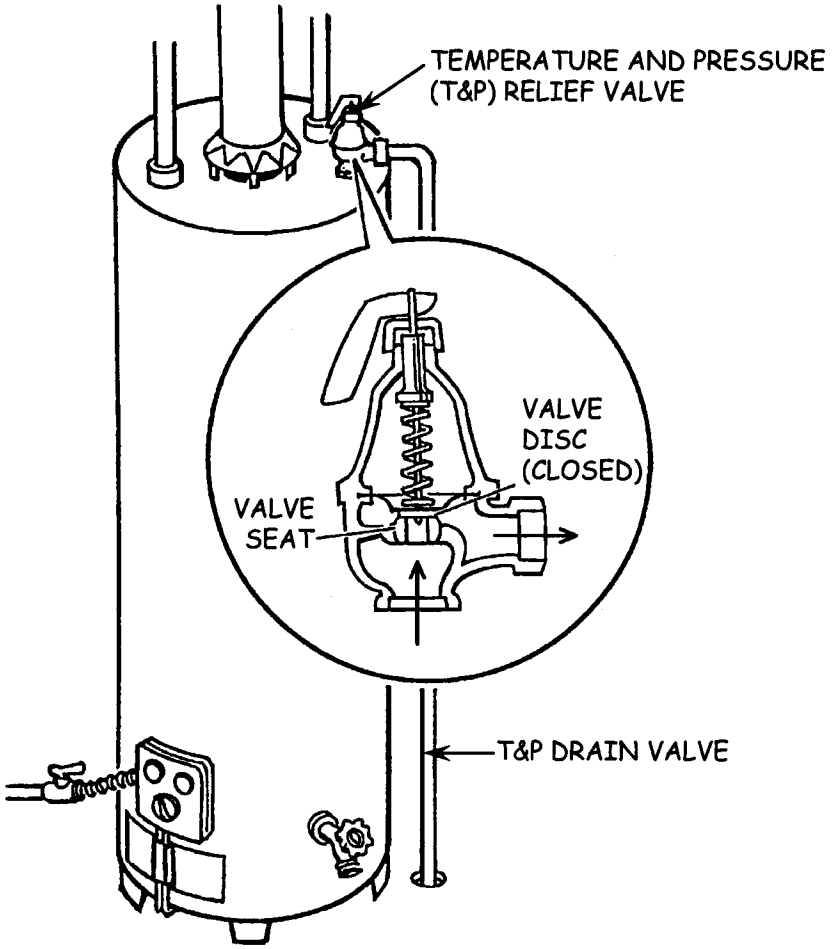

ELECTRIC WATER HEATERS

15. THERMOSTATS AND IDENTIFICATION LABEL

- **Upper and Lower Thermostats and ID Label**
  - **Locations shall be identified and made easily accessible.**
    - **Blanket shall be cut on sides and bottom to create a top-hinged flap over each thermostat cover plate.**
    - **Flap shall be held closed with tape installed along bottom slit.**
    - **Each flap shall be labeled in permanent ink: "Thermostat" or "ID Label".**
- **Identification Label**
  - **Flaps shall be held closed with tape.**
    - **A minimum of one tape strip shall be installed along slit opposite flap hinge.**
    - **All slits longer than 12" shall be secured with tape installed lengthwise along the slit.**
  - **Flaps shall be labeled in permanent ink to identify what is underneath.**

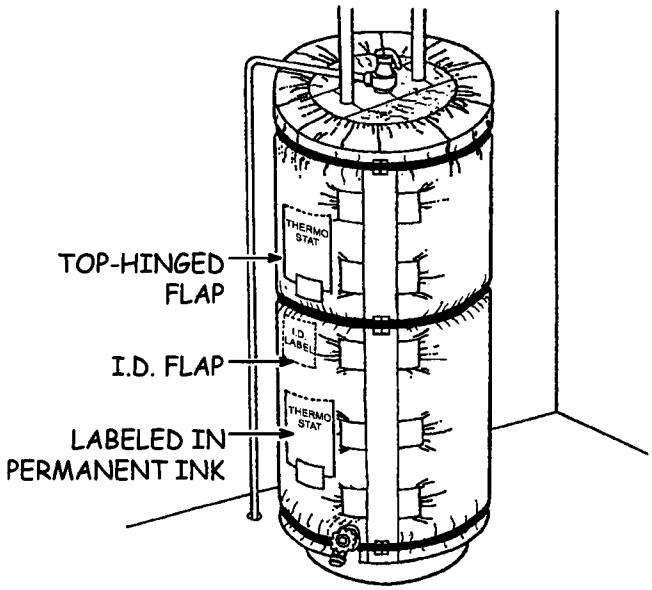

17. COMBUSTION SAFETY REQUIREMENT—GAS UNITS

- **Combustion Air Supply**
  - **Both an upper and lower combustion air vent shall be present.**
  - **Vents shall <u>not</u> be obstructed.**
- **Evidence of Improper Combustion**
  - **Insulation shall <u>not</u> be installed when there is evidence of improper combustion, such as:**
    - **Soot accumulation near draft hood or on floor underneath tank.**
    - **Scorching or smoke residue at the draft hood or combustion chamber access.**
- **Combustion Chamber Access Cover**
  - **At least one access cover shall be present.**
  - **There shall be no signs of scorching or incomplete combustion.**

18. WATER HEATER COMPARTMENT FLOOR

- **The tank shall be in a stable position on flooring that is adequately sound to support the weight of the water heater.**
- **If the floor is weak or damaged and/or the tank is leaning abnormally, water heater insulation shall <u>not</u> be installed.**

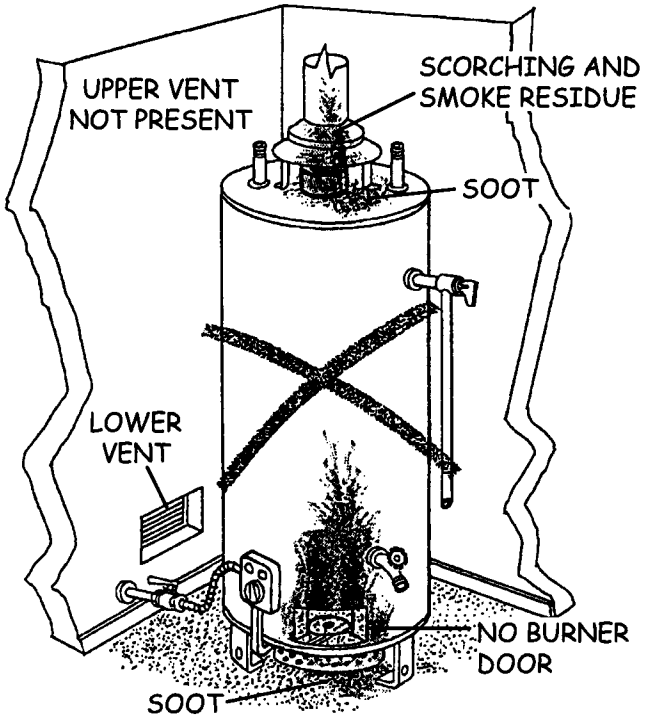

DO <u>NOT</u> INSULATE TANK

WATER HEATER PIPE INSULATION STANDARDS

1. APPROVED MATERIALS

- **All Materials**
  - Maximum flame-spread index of 25 and maximum smoke-developed index of 450, per ASTM E84, or UBC Standard 8-1.
- **Insulation**
  - Preformed foam (e.g. closed cell polyethylene) conforming to ASTM C534.
  - Inside diameter of preformed material shall be appropriate for the size pipe being insulated.
  - Minimum thermal performance rating of 180°F.
- **Tape**
  - Tape specified by insulation manufacturer, <u>or</u>
  - Minimum 2" wide pressure-sensitive metallic tape meeting or exceeding strength and adhesive requirements of UL 181A-P or UL 181B-FX.
  - Cloth duct tape and electrical tape are <u>not</u> allowed.
- **Ties**
  - Plastic cable ties.

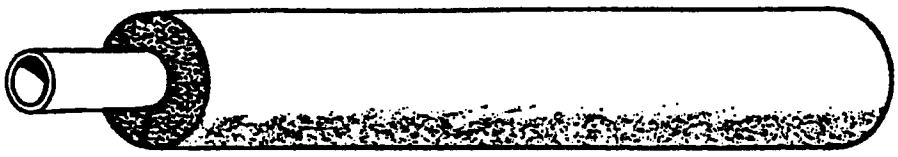

PREFORMED FOAM PIPE INSULATION

2. **R-VALUE OF PIPE INSULATION**
   - **R-4 minimum for pipes up to 2" in diameter.**
     - Minimum 1" insulation wall thickness.
     - *Exception:* 3/4" wall thickness acceptable if R-value requirement is met.
   - **R-6 minimum for pipes greater than 2" in diameter.**
     - Minimum 1.5" insulation wall thickness.

3. **SHEET OR SEMI-MOLDED INSULATION**
   - **All Units**
     - Not allowed.

4. **HEAT TAPE OR STRAP INSULATION**
   - **All Units**
     - Not allowed.

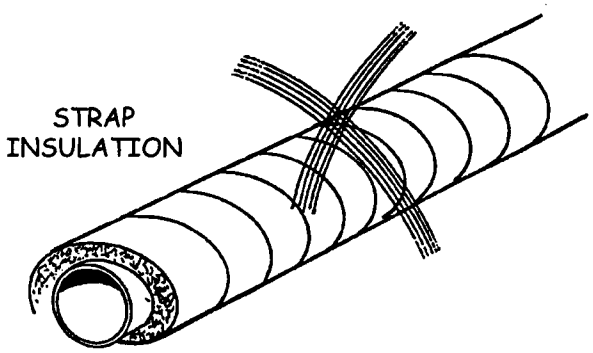

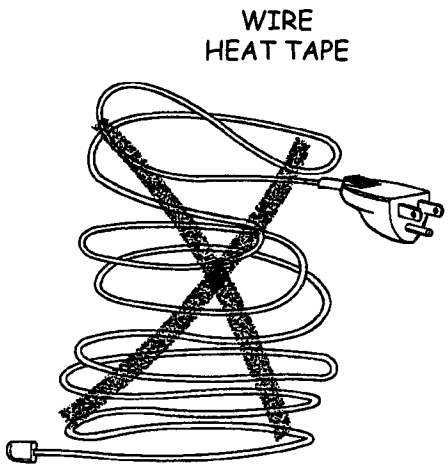

7. COVERAGE RESTRICTIONS

- **All Units**
  - Materials shall not cover:
    - Temperature and pressure (T&P) relief (or gas shutoff) valve.
    - Valve handles.
    - Control and safety devices.
    - T&P drain line.
    - Leaking pipes.
- **Gas Units**
  - Minimum 6" clearance required from combustible insulation materials to single-wall gas vent pipe.
  - Minimum 3" clearance, or as specified by listing, from listed Type B gas vent piping connectors.
  - Minimum 3" clearance from draft hood opening.
  - No part of the draft hood opening shall be obstructed.

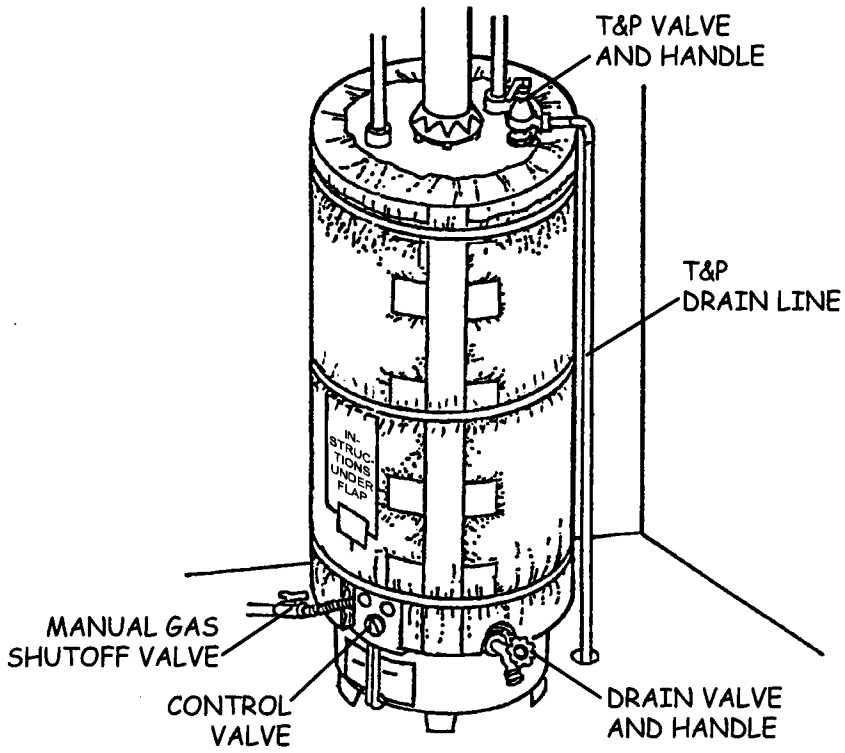

ITEMS NOT TO BE COVERED

10. GENERAL ATTACHMENT REQUIREMENTS

- **Insulation shall be firmly secured with plastic ties, tape, wire, or sleeves.**
- **All slits and joints shall be glued or taped to achieve complete closure.**
- **All material shall be corrosion-resistant.**
- **Tape shall be used on bends, 90° elbows, and joints.**

11. GLUE FOR ATTACHMENT

- **Glue shall be compatible with insulation and manufacturer's instructions.**

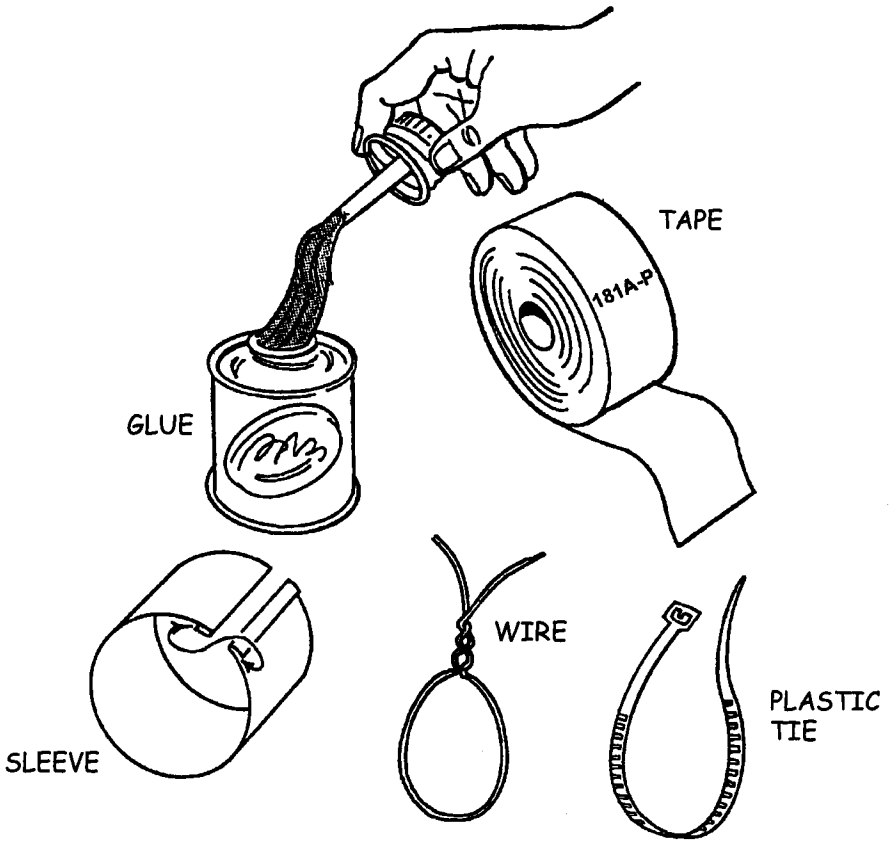

ENERGY-SAVER SHOWERHEAD AND FAUCET AERATOR STANDARDS

1. APPROVED MATERIALS

- **Showerheads and Aerators**
  - Conformance to ASME A112.18.1-2003.
  - Compliance with CEC (Title 24) Residential Manual Section 5.2.5.
- **Showerheads**
  - "Self-cleaning" type or cleanable without being unscrewed from the showerarm.
  - Non-aerating type.
  - Ball joint shall be metal (e.g., chrome-plated brass).
  - Ball joint shall be made of the same material as showerarm.
- **Showerarm Adapters**
  - Adapter shall be metal (e.g., chrome-plated brass).
  - Minimum 5/8" long male pipe threads with a minimum taper of 3% on showerhead end.
- **Aerators**
  - Shall be metal (e.g., chrome-plated brass).

2. WARRANTY

- **Showerheads and Aerators**
  - Minimum three-year warranty.

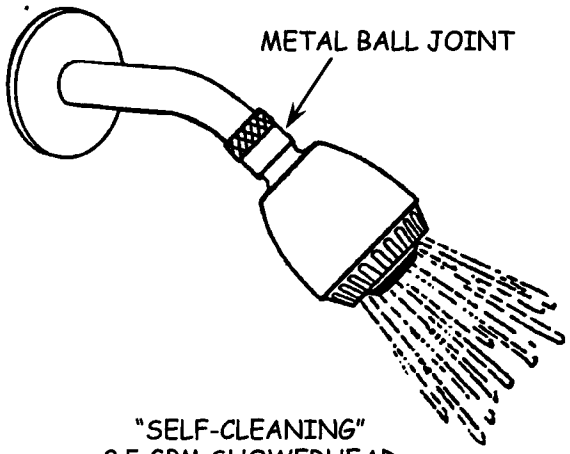

"SELF-CLEANING"
2.5 GPM SHOWERHEAD

3. **FLOW RATE**
   - **Showerheads**
     - Maximum flow rate: 2.50 gpm at 80 psi.
     - Minimum flow rate: 2.0 gpm at 40 psi.
   - **Faucet Aerators**
     - Maximum flow rate: 2.2 gpm at 60 psi.

4. **FLOW CONTROL**
   - **Showerheads**
     - Flow-restricting devices shall be factory-installed and mechanically-retained (e.g., with a retaining ring or expansion seat), requiring 8 lbs. or more of pulling force to remove.
     - Removable flow restrictors are not allowed.

5. **INSTALLATION**
   - **Functional Showers**
     - Energy-saver showerheads shall be installed on all functional showers that have flow rates greater than 3.0 gpm.
   - **Nonfunctional Showers**
     - Energy-saver showerheads shall <u>not</u> be installed on showers which are <u>not</u> functional due to plumbing or physical defects.

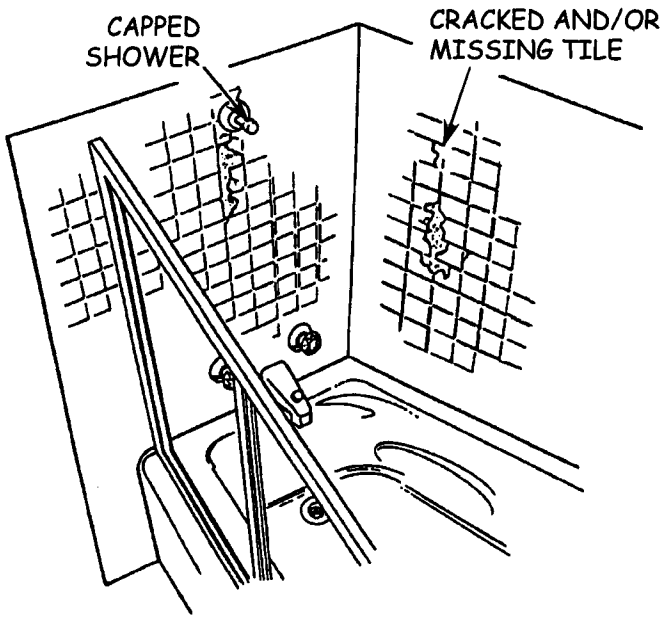

NONFUNCTIONAL SHOWER

WINDOW REPLACEMENT STANDARDS

1. APPROVED MATERIALS

- **Windows shall:**
  - Be in conformance with one or more of the following:
    - NWWDA I.S. 2-93, 3-95, or 8-95; or ANSI/AAMA 101-93.
    - AAMA/NWWDA 101/I.S.2-97.
  - Comply with local code and Title 24 energy efficiency requirements, as shown in Table 12-1.
  - Bear an NFRC temporary label.
- **Permanent Label**
  - Each unit shall bear a permanent label which:
    - Lists both (a) the energy performance with rating procedure, and (b) minimum Design Pressure rating, or
    - References the original certification information on file with the Independent Certification and Inspection Agency (IA).
- **Insect Screens**
  - All openable windows shall be equipped with insect screens.

2. REPLACEMENT SELECTION

- **Horizontal sliders shall be replaced with horizontal sliders.**
- **Vertical sliders shall be replaced with vertical or horizontal sliders.**
- **Picture windows shall be replaced with picture windows or sliding windows.**
- **Jalousies shall be replaced with vertical or horizontal sliders.**

TABLE 12-1: REPLACEMENT WINDOW MINIMUM REQUIREMENTS

EFFICIENCY FACTOR	CLIMATE ZONE	MAXIMUM VALUE
Solar Heat Gain Coefficient (SHGC)	2, 4, & 7 – 15	0.40
	1, 3, 5, 6, 16	No Requirement
U-Factor	16	0.55
	1, 2, 10 – 16	0.57
	3 – 9	0.67

3. **GLAZING COMPOUND**
   - **Required in sashes designed to use glazing compound.**
   - **Caulk <u>not</u> allowed in lieu of glazing compound.**
   - **Glazing compound shall:**
     - **Be the type which remains pliable.**
     - **Conform to ASTM C669 for metal sashes.**

4. **CHANNEL GASKETS**
   - **Gasket shall make watertight seal all around the metal sash.**
   - **New replacement gasket shall be:**
     - **Installed when feasible.**
     - **Proper size to form snug fit in channel.**
   - **Existing gasket may be reused.**
     - **Shall be in satisfactory condition to provide a complete seal.**
     - **Clear silicone caulk or equivalent may be added to fill in the gaps.**
   - **Where proper gasket cannot be provided, glass shall be stabilized in clear silicone caulk or equivalent.**

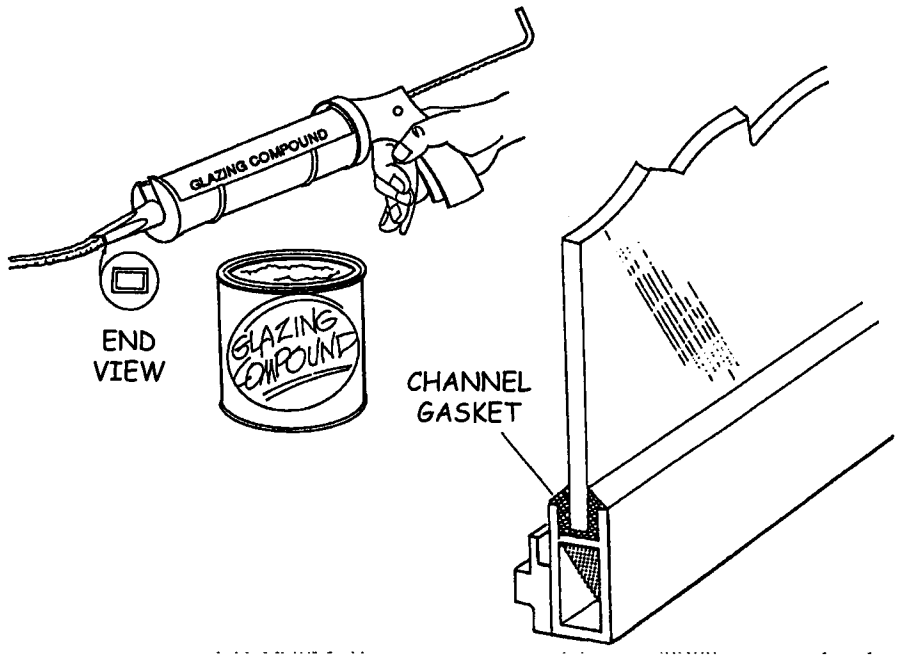

SECTION 14

THREAD-BASED COMPACT FLUORESCENT LAMP STANDARDS

1. **MATERIALS**
   - **Compact Fluorescent Lamps (CFLs) must be:**
     - **ENERGY STAR® qualified.**
     - **Warranted for one year from date of purchase.**
2. **INSTALLATION**
   - **All Types**
     - **All lamps, without exception, shall be installed by the contractor.**
     - **Only incandescent and halogen lamps shall be replaced.**
     - **Manufacturer's recommendations shall be followed.**

ALL UNITS MUST MEET OR EXCEED
ENERGY STAR PROGRAM EFFICIENCY STANDARDS

7. **CLUSTER LIGHTING**
   - **All Types**
     - **CFLs shall <u>not</u> be installed in chandeliers or other cluster lighting fixtures unless the CFL is specifically designed for such applications.**
     - **The fixture shall remain level after installation of the CFL.**

8. **DIMMERS, PHOTOSENSORS, AND OCCUPANCY SENSORS**
   - **All Types**
     - **Only CFLs rated for use with dimmers, photosensors, and occupancy sensors shall be installed in fixtures controlled by such devices.**

9. **TIMERS**
   - **Mechanical**
     - **CFLs may be installed in fixtures equipped with mechanical timers.**
   - **Solid State**
     - **CFLs shall <u>not</u> be installed in fixtures equipped with solid state timers.**

10. **LAMP CORD SUPPORTED**
    - **All Types**
      - **CFLs shall <u>not</u> be installed in fixtures supported only by a lamp cord unless the manufacturer allows the use of CFLs in such fixtures.**

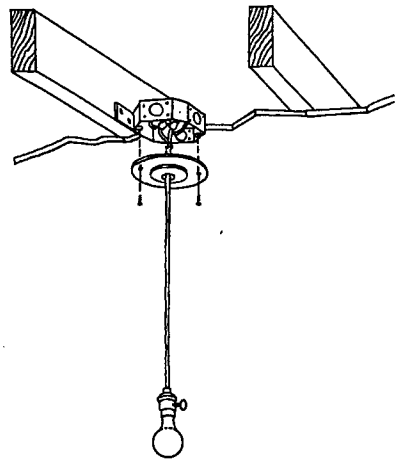

SECTION 15

HARD-WIRED COMPACT FLUORESCENT FIXTURE STANDARDS

1. MATERIALS

- **Fixture ballast must be UL listed (UL 935) Class-P.**
- **CFLs must be ENERGY STAR® qualified.**
- **Compact fluorescent lamp (CFL) tube glass and other housing materials must be UV resistant and heat stable.**
- **Hardwired fixtures and lamps must be fully warranted for one year from date of purchase.**
- **Fixture must allow for lamp replacement and utilize Title 24-compliant high efficacy (e.g., pin-based) lamps meeting the following standards:**
  - **40 Lumens/watt — lamps 15 watts or less**
  - **50 Lumens/watt — lamps over15 watts to 40 watts**
  - **60 Lumens/watt — lamps over 40 watts**

2. INSTALLATION

- **All fixtures shall be installed:**
  - **In accordance with the current NEC and local codes.**
  - **In a manner which prevents water from entering or accumulating in wiring compartment, lamp holder or electrical parts.**
- **All wiring, conduit, accessories, fasteners, and controls used in exterior locations shall be designed for exterior use.**

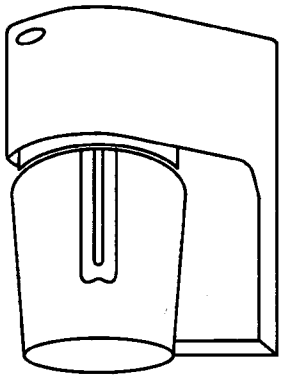

WALL-MOUNT
FLUORESCENT FIXTURE
WITH PHOTO CELL CONTROL

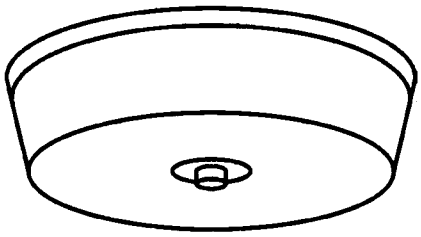

CEILING-MOUNT
COMPACT FLUORESCENT
REPLACEMENT FIXTURE

10. **EGRESS WINDOWS (continued)**
    - **Cooler shall not be installed in egress windows <u>unless</u>:**
      - **Allowed by customer, <u>and</u>**
      - **One of the following is present in the same room:**
        - **Another operable window which meets egress requirements, <u>or</u>**
        - **An operable exterior door which meets egress requirements.**

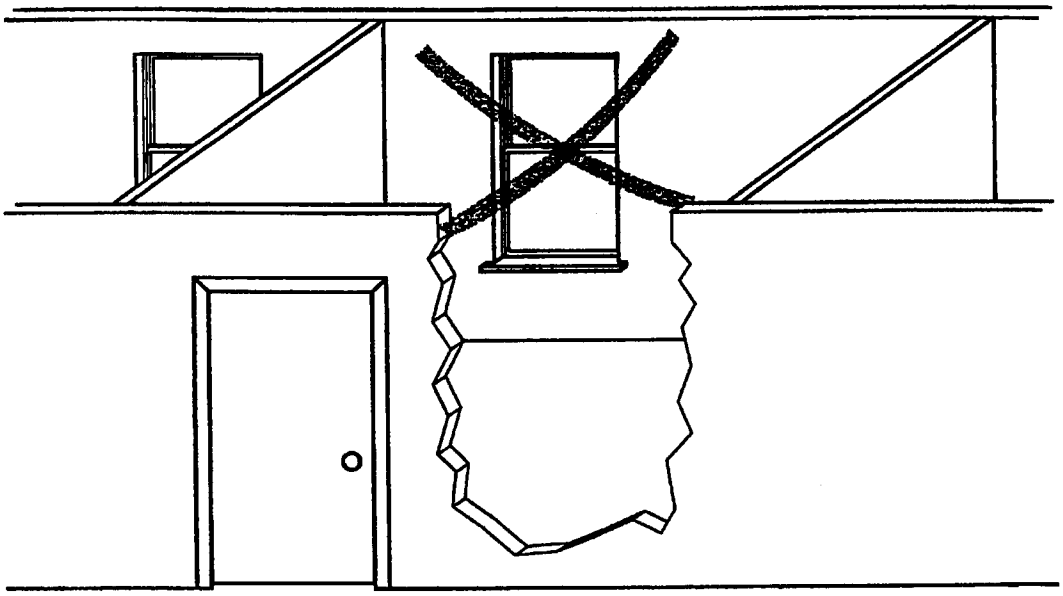

COOLER <u>NOT</u> INSTALLED
IN THE ONLY EGRESS OPENING

11. LOCATION

- **All Units**
  - **Clearances and mounting height shall be in compliance with local code.**
  - **Unit shall be installed only in a window or wall opening.**
  - **Exterior portion of unit shall be located a minimum of 1' above grade.**
  - **Discharge shall <u>not</u> be located where it can disturb combustion appliance burners/pilots (e.g., in kitchen near gas range).**
- **Wall-Mount Units**
  - **Air discharge outlet shall be located a minimum of:**
    - **3' above the floor unless mounted under window.**
    - **18" above floor if:**
      - **Discharge grille is equipped with directional louvers, and**
      - **Location is allowed by manufacturer.**

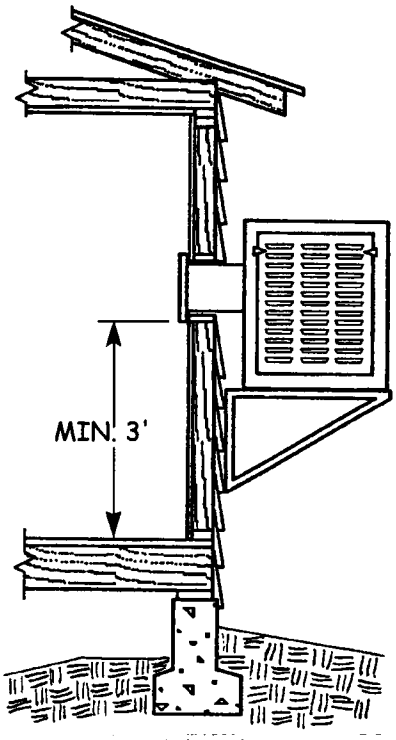

STANDARD
WALL UNIT

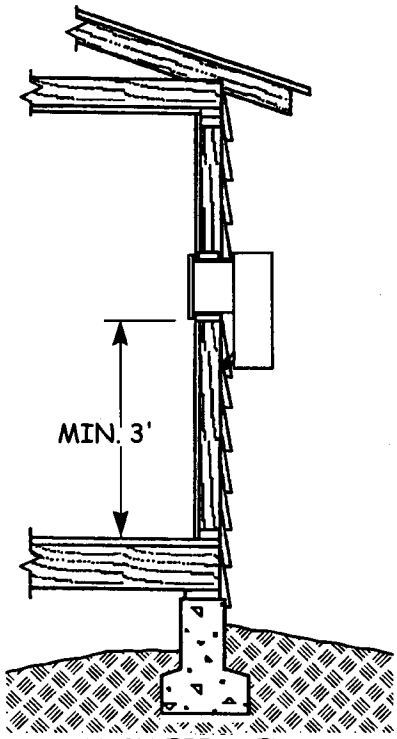

HIGH-EFFICIENCY
WALL UNIT

11. **LOCATION (continued)**
    - **Window-Mount Units**
        - **Air discharge outlet shall be located a minimum of:**
            - **3' above the floor unless mounted under window.**
            - **18" above floor if:**
                - **Discharge grille is equipped with directional louvers, and**
                - **Location is allowed by manufacturer.**

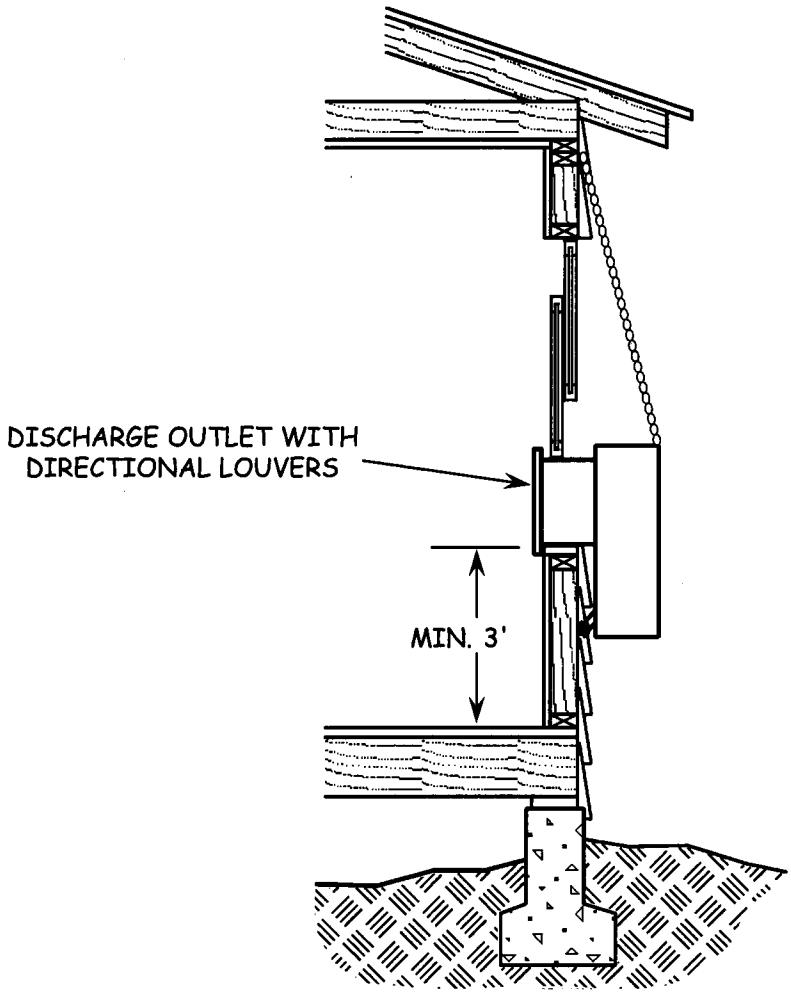

11. LOCATION (continued)

- **Sidewalk Clearance**
  - **Unit shall <u>not</u> extend into sidewalk clearance zone (i.e., over sidewalk).**
  - **Clearance from sidewalk shall be 21" if allowed by local code.**

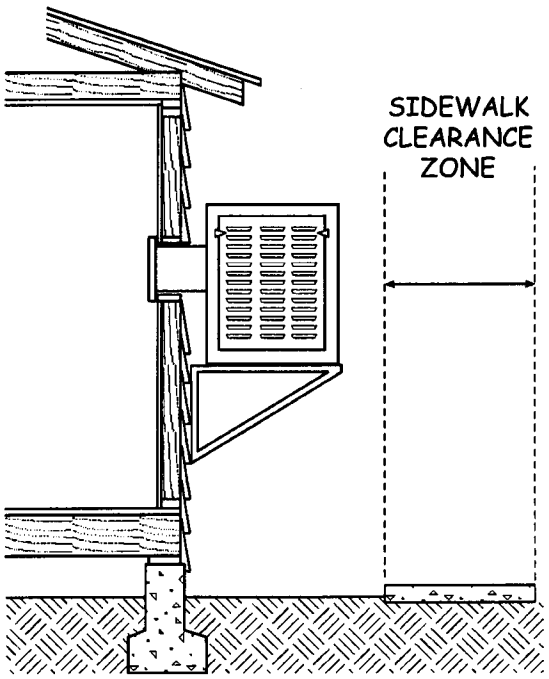

STANDARD
WALL UNIT

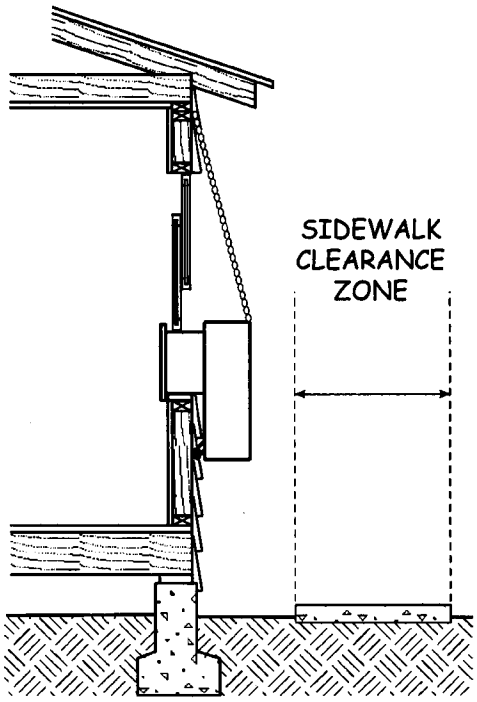

HIGH-EFFICIENCY
WINDOW UNIT

11. **LOCATION (continued)**
    - **Exterior Clearance**
        - **Clearance shall comply with local code.**
        - **Cooler air intake shall be located:**
            - **Minimum of 3' from the gas meter.**
            - **Minimum of 10' away from, or 3' below, the following:**
                - **Combustion appliance flue/vent terminations.**
                - **Clothes dryer moisture exhaust termination.**
                - **Plumbing vent terminations.**
                - **Exhaust fan vent termination.**
        - **Unit shall <u>not</u> be installed if clearance requirements cannot be met.**
    - **Interior Clearance**
        - **Unit shall be free of obstructions, such as furniture, curtains, plants, etc.**

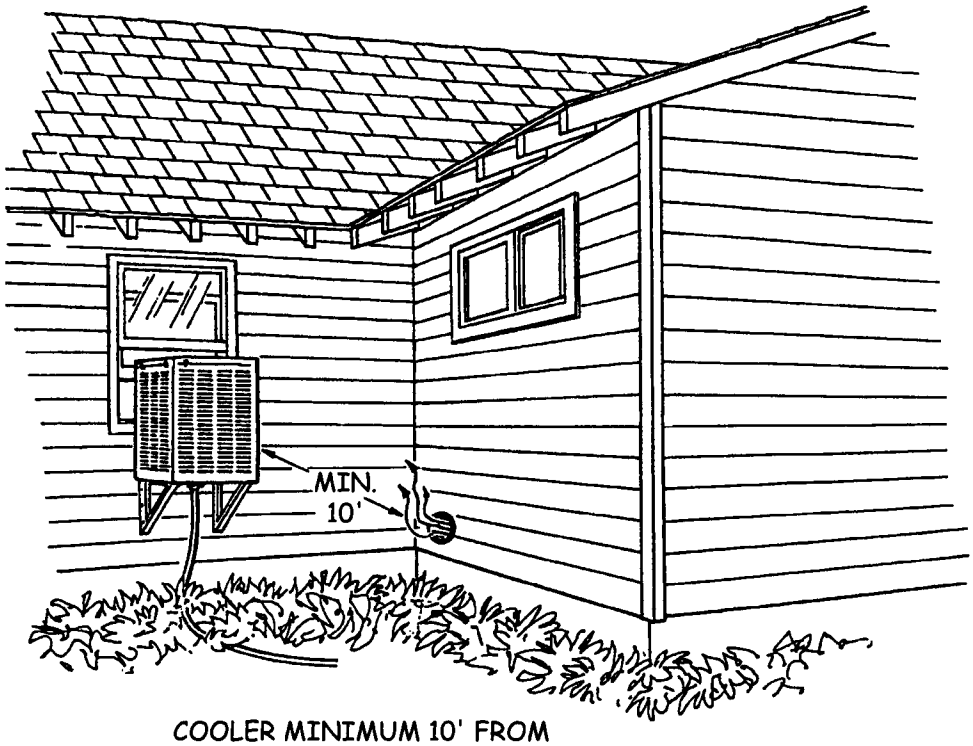

COOLER MINIMUM 10' FROM
CLOTHES DRYER MOISTURE EXHAUST

SECTION 17

REPLACEMENT REFRIGERATOR STANDARDS

1. REPLACEMENT REFRIGERATOR

- All units shall be:
  - UL listed.
  - ENERGY STAR® qualified.
  - Frost free.
- Capacity
  - Replacement refrigerator size shall be approximately equal to that of existing unit.
  - Two refrigerators and/or freezers exchanged for a single refrigerator may be replaced with a unit no larger than 23 cu ft.

2. WARRANTY

- All Units
  - Shall have a minimum 1 year warranty parts and labor.

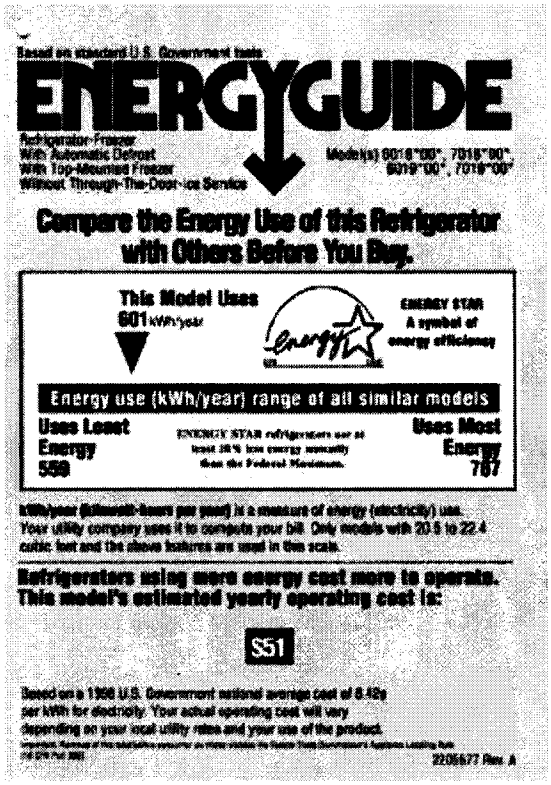

ENERGY GUIDE LABEL WITH ENERGY STAR® LOGO

6. ELECTRICAL REQUIREMENTS

- **Electrical Circuit**
  - **Overcurrent protection and size of conductors shall be in conformance with manufacturer's specifications and local code.**
  - **A GFCI-protected circuit or receptacle shall <u>not</u> be used.**
- **Electrical Outlet**
  - **Refrigerator shall be plugged into its own individual electrical outlet (not shared with another appliance).**
  - **The receptacle and cover plate shall be in good condition.**
  - **The receptacle shall be properly grounded in conformance with the California Electrical Code (CEC) and local code.**
- **Extension Cord**
  - **An extension cord may be used when allowed by manufacturer's instructions and with prior approval of Program Manager.**
  - **Extension cord shall be:**
    - **UL listed, 3-conductor cord, with 3-prong plug and receptacle.**
    - **Minimum 14 AWG.**
    - **Maximum 6' in length.**
- **Appliance cord and extension cord shall <u>not</u> be located where either can create a walking hazard (where people can trip).**

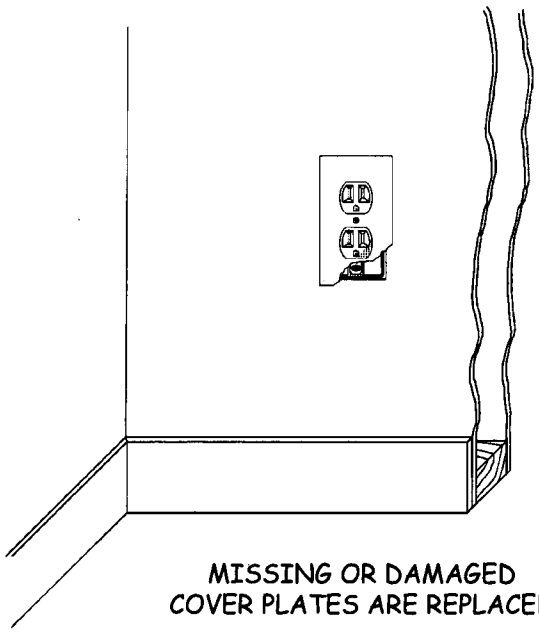

MISSING OR DAMAGED
COVER PLATES ARE REPLACED

8. INSTALLATION OF A NEW GROUNDED RECEPTACLE

- **A new 3-prong receptacle with ground lug shall be installed when the preexisting receptacle is nonconforming.**
- **A building permit shall be obtained and finalized when required by the local jurisdiction.**
- **The new receptacle shall be properly grounded:**
  - **To the equipment grounding conductor (e.g., green or bare wire), <u>or</u>**
  - **To an alternative grounding means when an equipment grounding conductor is <u>not</u> present.**
  - **The new outlet must be installed with the ground lug in the bottom position, unless refrigerator cord has a right-angle plug designed to be installed with ground lug at top.**

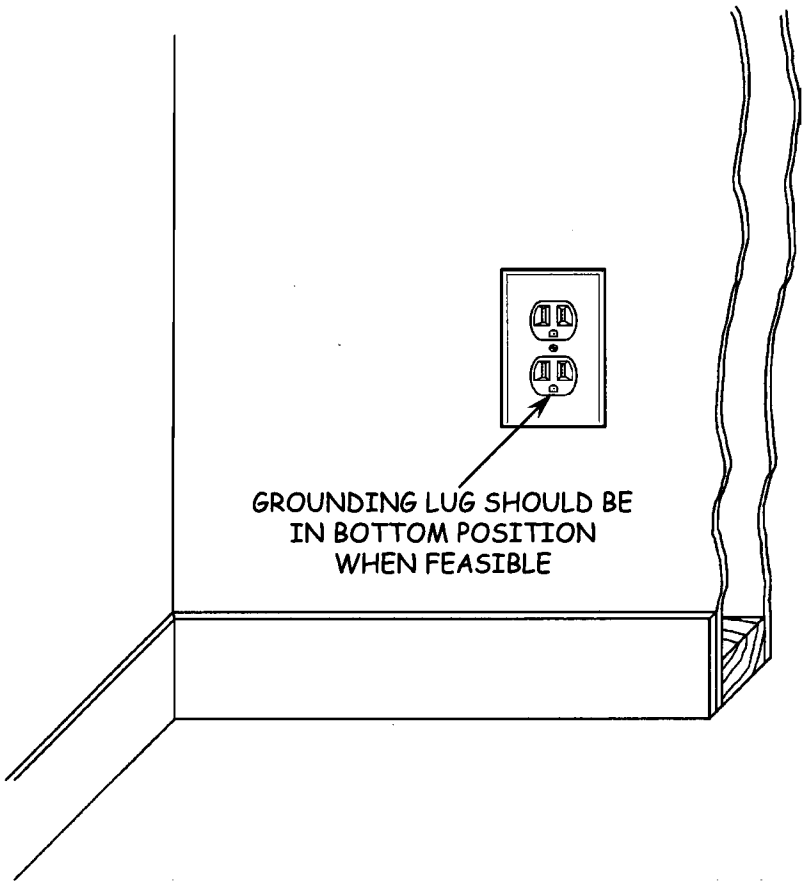

NATURAL GAS WALL AND FLOOR FURNACE REPAIR AND REPLACEMENT STANDARDS

NEW INSTALLATION

1. MATERIALS

- **All Furnaces shall:**
  - Be UL listed and GAMA certified.
  - Be the most efficient model feasible to install, but no lower in efficiency than specified below.
- **Wall Furnaces**
  - Minimum Efficiencies for Fan Type Wall Furnaces
    - 73% AFUE for output capacities up to 42,000 Btu/hr.
    - 74% AFUE for output capacities over 42,000 Btu/hr.
  - Minimum Efficiencies for Gravity Type Wall Furnaces
    - 62% AFUE for output capacities 15,001 - 19,000 Btu/hr.
    - 63% AFUE for output capacities 19,001 - 27,000 Btu/hr.
    - 64% AFUE for output capacities 27,001 - 46,000 Btu/hr.
    - 65% AFUE for output capacities over 46,000 Btu/hr.
- **Floor Furnaces**
  - Minimum Efficiencies for Floor Furnaces
    - 56% AFUE for output capacities up to 37,000 Btu/hr.
    - 57% AFUE for output capacities over 37,000 Btu/hr.

TABLE 19-1: MINIMUM EFFICIENCIES OF REPLACEMENT FURNACES

FURNACE TYPE	BTU/HR. OUTPUT CAPACITY	MINIMUM AFUE (%)
WALL WITH FAN	• up to 42,000 • over 42,000	• 73% • 74%
WALL WITHOUT FAN	• 15,001 - 19,000 • 19,001 - 27,000 • 27,001 - 46,000 • over 46,000	• 62% • 63% • 64% • 65%
FLOOR	• up to 37,000 • over 37,000	• 56% • 57%

9. THERMOSTATS

- **Location and Mounting**
  - New thermostat shall be installed at existing location unless affected by drafts, heat from direct sun, or adjacent appliances.
  - Thermostat installed in a new location:
    - Shall be mounted with the top of thermostat 60" above the floor when occupants are not handicapped.
    - May be installed as low as 48" above the floor when an occupant uses a wheelchair.
    - May be installed on the appliance housing at least 48" above the floor when:
      - Allowed by the manufacturer, and
      - Wall mounting requires wiring that is not feasible (e.g., attic not accessible).
  - Thermostat shall be located on an interior wall away from direct sunlight, doors, windows, return/supply air, appliances, and sources of electrical interference.
  - Mounting bracket shall be securely attached to wall with screws for wood, or appropriate anchors for drywall and plaster.
  - Any holes or damage to wall from installation or removal of thermostat shall be repaired in a workmanlike manner.

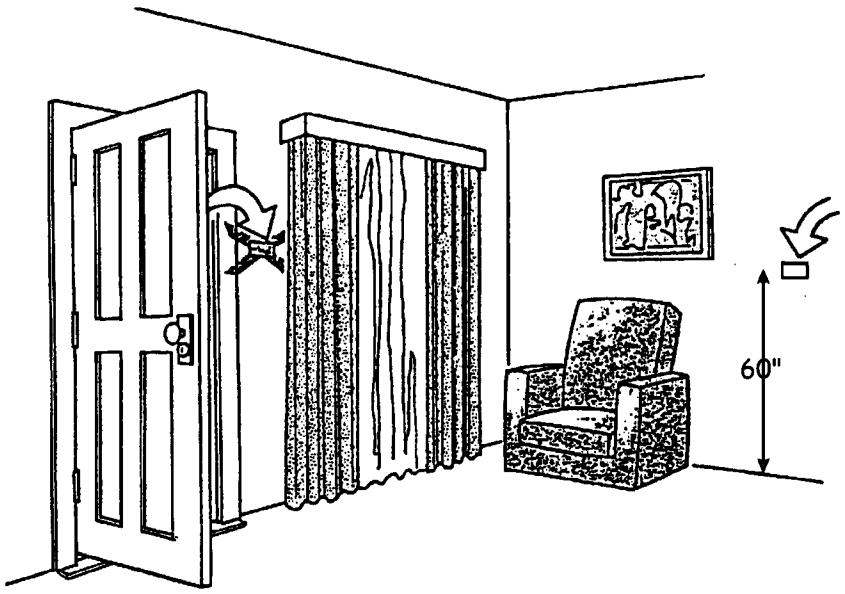

11. FLUE AND VENT SYSTEMS

- **Installation**
  - New flue/vent system shall be installed and secured in conformance with the manufacturer's instructions and local code.
- **Termination**
  - New flue/vent system termination shall be in conformance with the manufacturer's instructions and local code.
  - Flue/vent pipes within 10' of an evaporative cooler shall terminate at least 3' above the cooler.
  - Reference standards:
    - CMC Chapter 8, Section 806.0.
    - LIEE WIS, Section 29, NGAT.

12. ACCESS AND SERVICE SPACE

- **All Installations**
  - Access and service space shall be provided in accordance with CMC Section 305.
- **Floor Furnace**
  - Control valve operation must be accessible from inside the residence.
  - Pilot light must be accessible for lighting from inside the residence.

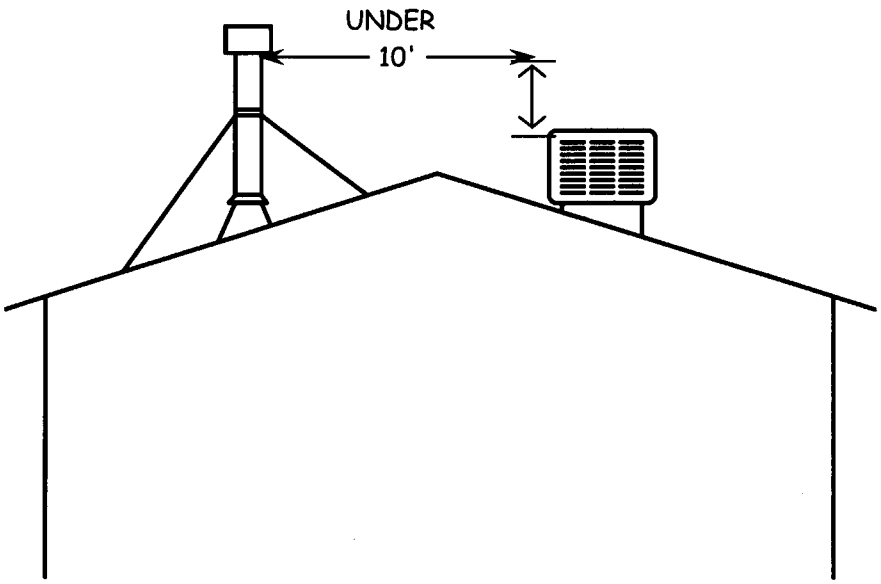

24. BURNERS

- **The furnace shall be checked for evidence of combustion problems, such as the following, and necessary corrections shall be made.**
- **Burner Performance**
  - When the burner(s) ignite, checks shall be made for:
    - Delayed ignition.
    - Excessive roll-out.
  - Burner(s) shall be examined for flame abnormalities, including:
    - Large yellow flame (more than 50% yellow).
    - Soft lazy flame or smothering flame.
- **Carbon and Rust**
  - The top of the burner(s), the heat exchanger, draft hood and flue/vent pipe shall be examined for excessive amounts of carbon or rust.
- **Burners and venturies shall be clean, and ports shall be unobstructed.**
- **Burners shall be correctly aligned/positioned.**
- **Burner Operation**
  - Air shutters shall be clean and adjusted for correct air/gas mixture.
  - Gas pressure shall comply with manufacturer's specifications.
  - Burner shall <u>not</u> be under- or over-fired.
- **Carbon Monoxide**
  - CO in flue gas shall be within limits specified by:
    - Manufacturer's instructions, and
    - LIEE WIS Section 29, NGAT.

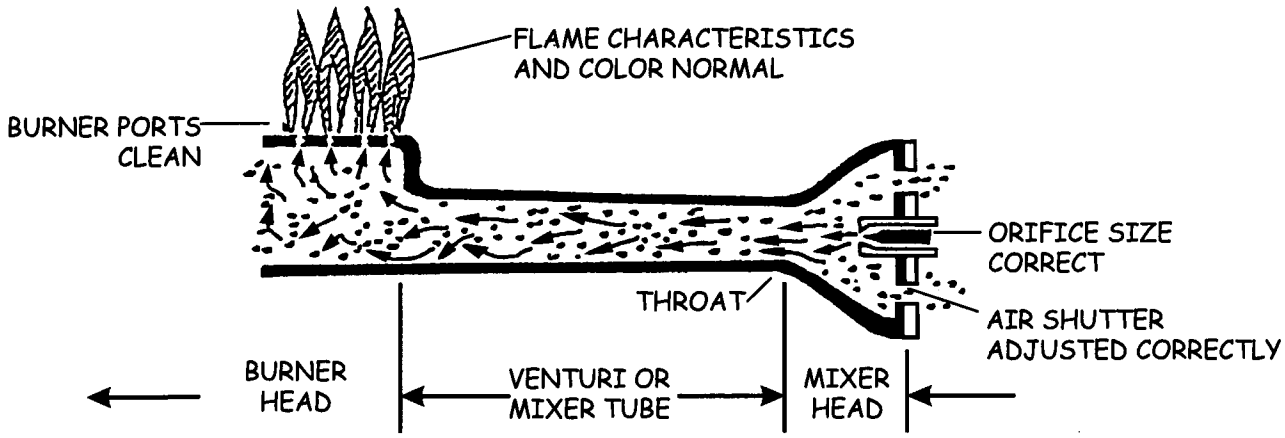

3. **MANUFACTURER'S INSTRUCTIONS**
   - **Installer shall:**
     - **Review manufacturer's instructions before beginning the installation.**
     - **Properly install the air conditioner in accordance with those instructions.**

4. **MAXIMUM SIZE UNIT**
   - **Replace like-for-like: The Btu output of the new unit shall match the Btu output of the unit being replaced (± 500 Btu).**
   - **Unit may be down-sized with prior approval of Program Manager, but the new unit must comply with the chart below.**

AREA TO BE COOLED (SQ. FT.)	CAPACITY (BTU/HR)*
100 TO 150	5,000
151 TO 250	6,000
251 TO 300	7,000
301 TO 350	8,000
351 TO 400	9,000
401 TO 450	10,000
451 TO 500	12,000
501 TO 700	14,000
701 TO 1000	18,000

***Adjustments to make:**

- **If the room is heavily shaded, reduce capacity by 10 percent.**
- **If the room is very sunny, increase capacity by 10 percent.**
- **If more than two people regularly occupy the room, add 600 Btu/Hr for each additional person.**
- **If the unit is for a kitchen, increase capacity by 4,000 Btu/Hr.**

11. MINIMUM HEIGHT

- All Units
  - Unit shall be installed only in a window or wall opening.
  - Exterior portion of unit shall be located a minimum of 2' above grade.
- Wall-Mount Units
  - Air discharge outlet shall be located a minimum of3' above the floor unless mounted below a window.
  - Shall be installed in existing location if the location meets requirements of local code, <u>and</u> is
    - 18" above floor if:
      - Discharge grille is equipped with directional louvers, and
      - Location is allowed by manufacturer.

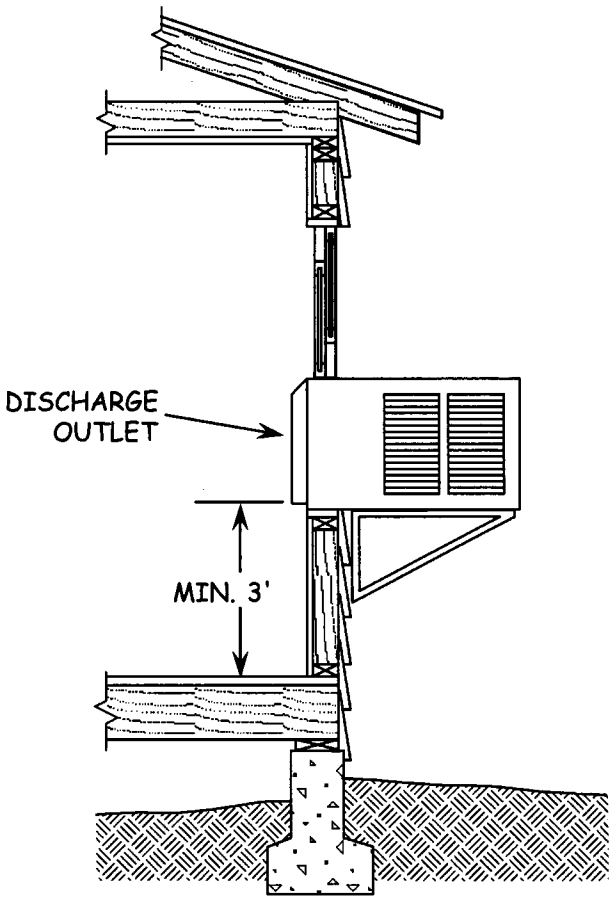

12. LOCATION

- **Window-Mount Units**
  - **All Windows**
    - **Air conditioner shall be placed in center of window opening.**
    - **Permanent window panels shall be installed to completely fill empty spaces over 12" wide.**
    - **Side window panels over 12" wide shall be transparent.**
    - **Window panels shall be sealed in place.**
    - **Unit shall be placed on north or east side of home out of direct sun when possible.**
    - **Place unit in the shade of trees and shrubs when feasible.**
  - **Double-Hung Windows**
    - **Air conditioner shall be installed in lower sash opening.**
    - **Lower sash shall seal against unit and side panels.**

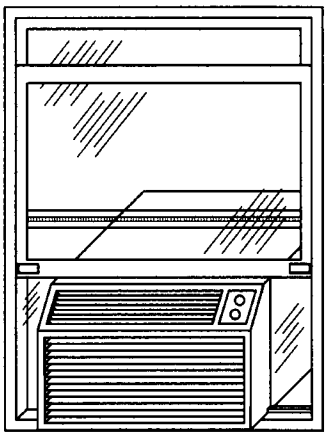

AIR CONDITIONER CENTERED
IN WINDOW OPENING

12. **LOCATION (continued)**
   - **Exterior Clearance (continued)**
     - **There shall be at least a 3' clearance from A/C inlet to the gas meter.**
     - **Property setback requirements shall <u>not</u> be violated.**
     - **Unit shall be free of obstructions, such as landscaping, plants, structures, etc.**
   - **Interior Clearance**
     - **Unit shall be free of obstructions, such as furniture, curtains, plants, etc.**

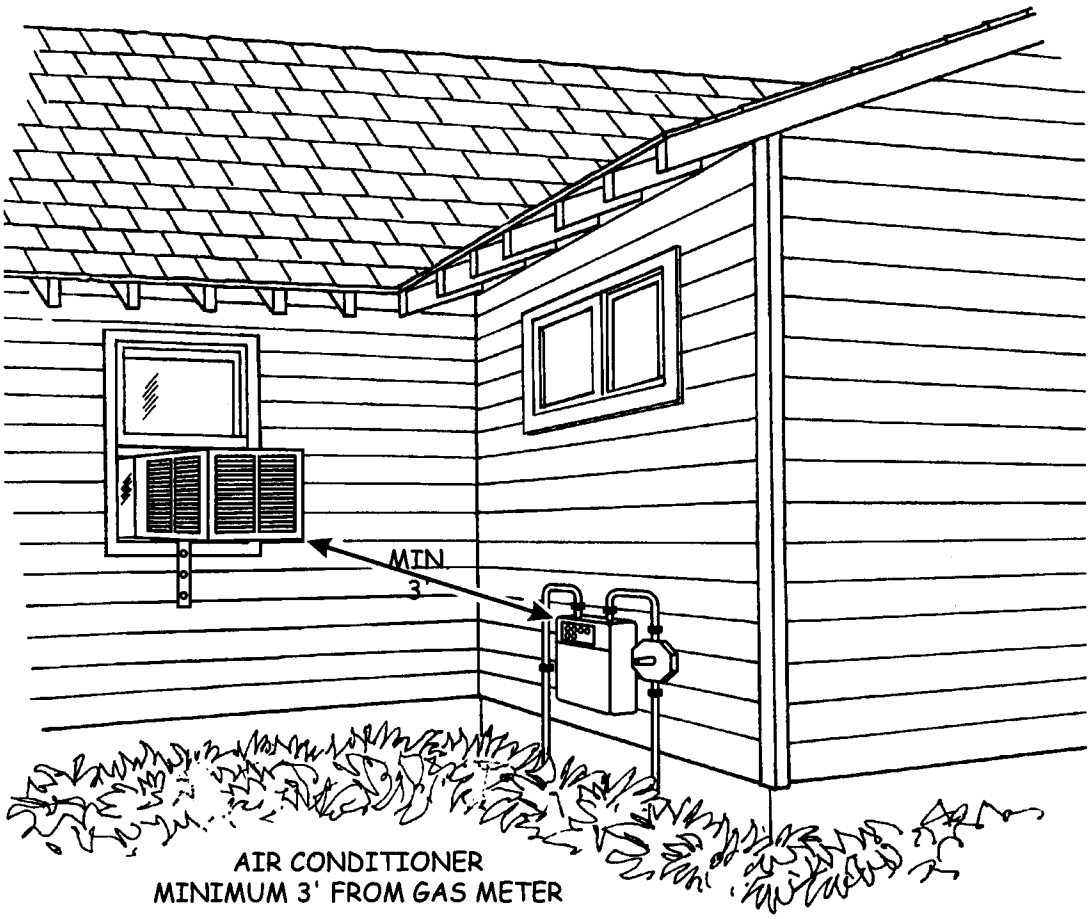

NATURAL GAS WATER HEATER REPLACEMENT STANDARDS

1. MATERIALS

- **Water Heaters**
  - Natural gas-fueled storage or instantaneous (tankless) type.
  - Minimum Energy Factor (EF) shall be in compliance with Title 24 energy efficiency requirements, per Table 25-1.
  - Listed and labeled in conformance with local code.
  - Manufactured to ANSI Z21.10.1 or ANSI Z21.10.3.
- **Vent Systems**
  - UL listed vent connectors, components, and Type B vent pipes.
  - Nonmetallic systems shall conform to ASTM D 1785 and D 2665.
- **Gas Piping and Valves**
  - Gas valves shall be listed (e.g., by UL) and AGA or CSA certified.
  - Flexible connectors shall be listed (e.g., by IAPMO) epoxy-coated or stainless steel units.
  - Fuel-gas gas piping shall comply with 2001 CMC Chapter 13.
  - Copper gas lines and butt-soldered joints not allowed.

2. WARRANTY

- **Minimum five (5) year written manufacturer's warranty.**
- **Minimum one (1) year written labor and parts warranty.**

TABLE 25-1: MINIMUM ENERGY FACTOR

WATER HEATER TYPE	VOLUME (GALLONS)	MINIMUM EF
Gas Storage	30	0.61
	40	0.59
	50	0.58
Gas Instantaneous	—	0.62

3. **GENERAL REQUIREMENTS**
   - **A permit for the installation shall be obtained from and finalized by the local authority having jurisdiction.**
   - **Installation shall be in conformance with:**
     - Product listing.
     - Manufacturer's instructions and specifications.
     - The California Electrical Code (CEC), the California Plumbing Code (CPC), and Local code.
   - **Orifice shall be verified to be sized for natural gas.**

4. **WATER HEATER SIZING**
   - **Replacement water heater capacity, the First Hour Rating, shall comply with the greater of:**
     - Manufacturer's sizing recommendations, or
     - Local code requirements, and
     - Storage units shall be no less than the 2000 Uniform Plumbing Code (UPC) minimum guidelines, as shown in the table below.

5. **LOCATION**
   - **All Units**
     - Clearances shall be in compliance with listing requirements, manufacturer's instructions, the UPC, and local code.
   - **Units in Enclosures**
     - Access door shall be at least 24" wide, and high enough to accommodate removal of the appliance.

MINIMUM CAPACITY FOR WATER HEATERS
FIRST HOUR RATING TABLE
BASED ON THE
2000 UNIFORM PLUMBING CODE (UPC) TABLE 5-1

Number of Bathrooms	1 to 1.5			2 to 2.5				3 to 3.5			
Number of Bedrooms	1	2	3	2	3	4	5	3	4	5	6
First Hour Rating*	42	54	54	54	67	67	80	67	80	80	80

***First Hour Rating, the water heating capacity expressed in gallons, is the amount of hot water the heater can supply per hour (starting with a tank full of hot water). The First Hour Rating is shown on the yellow EnergyGuide label.**

7. PLUMBING

- **All Units**
  - Only new parts shall be installed.
  - Threaded fittings shall be sealed with Teflon® tape or nontoxic pipe joint compound.
  - A cold water supply shutoff valve shall be installed if not present.
  - Flexible connectors shall be used to connect the tank to the rigid hot and cold water lines.
  - Dielectric insulators shall be installed on water piping connections to the tank when required by local code.

8. DRAIN PAN

- **Storage Units**
  - A watertight pan of corrosion resistant material shall be installed when the water heater is located in:
    - An attic or on a floor-ceiling assembly, or
    - Other location for which a pan is required by local code.
  - A minimum 3/4" diameter drain line from the pan shall be installed with a continuous downward slope to the exterior, or to a drain system, in accordance with local code.
  - Drain pan shall <u>not</u> inhibit proper combustion air flow.

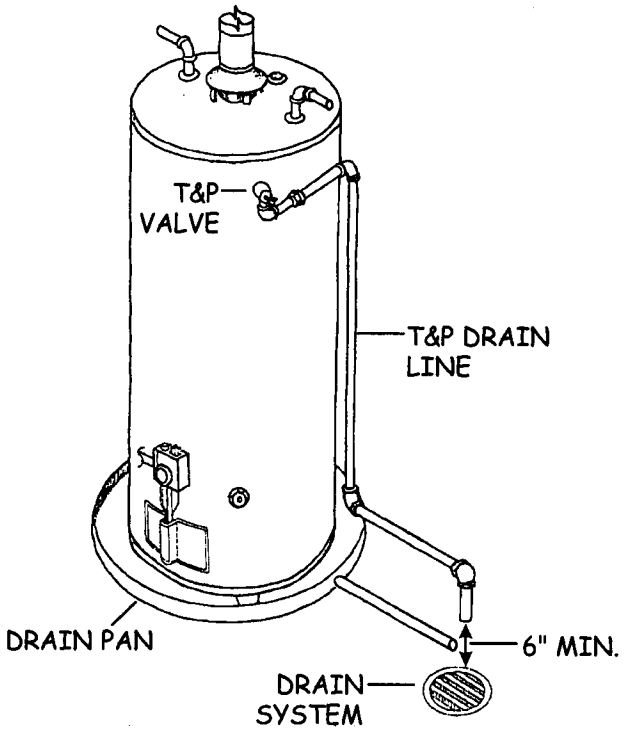

9. TEMPERATURE AND PRESSURE RELIEF

- **A Temperature and pressure (T&P) relief valve, or a gas shutoff valve and pressure-relief valve, shall be installed in conformance with the water heater manufacturer's instructions and local code.**
- **The T&P relief and gas shutoff valve shall:**
  - Be listed and manufactured to ANSI Z21.22.
  - Meet the sizing/pressure requirements of the water heater listing.
- **T&P Relief Valve Drain Line**
  - Line shall be galvanized steel, hard drawn copper, or CVPC.
  - Internal diameter of the line and fittings shall equal or exceed diameter of the relief valve outlet.
  - The line shall drain fully by gravity and shall not be trapped.
  - Drain line shall terminate outside the building, or in an approved drain system, with the terminal end:
    - No more than 24", nor less than 6", above the surface, and
    - Unthreaded and pointing downward.

10. SEISMIC BRACING

- **The tank shall be braced (strapped or anchored) to resist horizontal movement during an earth-quake.**
- **Bracing shall be:**
  - Installed per manufacturer's instructions and local code.
  - Securely attached to structural framing or ledger board.
- **Strap Locations**
  - Two straps shall be installed: one within the upper third of the tank, and one within the lower third of the tank.
  - The lower strap shall be at least 4" above the gas control valve.

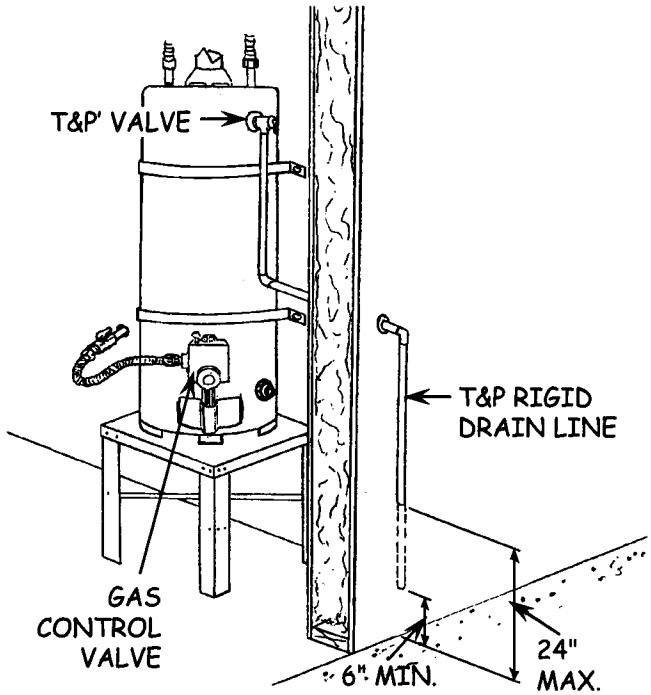

11. GAS LINES, FITTINGS AND VALVES

- **All Units**
  - All gas lines, flexible gas connectors, fittings and valves shall be installed per manufacturer's instructions and local code.
  - Manual gas shutoff valve shall be within 3' of the appliance and in the same room where the appliance is located.
  - A flexible gas connector shall be located between the gas control valve and shutoff valve.
  - Readily-accessible sediment trap (drip leg) shall be located just ahead of flexible gas connector when required by local code.
  - All new and affected gas lines, flexible gas connectors, fittings, and valves shall be checked for gas leaks using a method approved by the local jurisdiction.

12. COMBUSTION AIR

- **All Units**
  - Combustion air shall be supplied in conformance with manufacturer's instructions and local code.
  - Obstructions in existing combustion air vents (e.g., overblown insulation) shall be cleared as needed to provide required NFVA.

ELECTRONIC LEAK DETECTOR

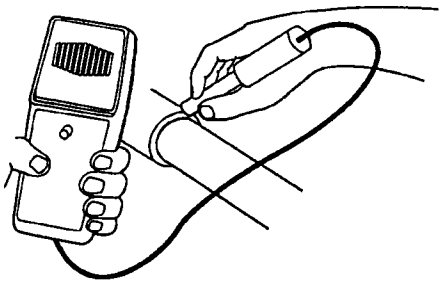

LIQUID LEAK DETECTION METHOD

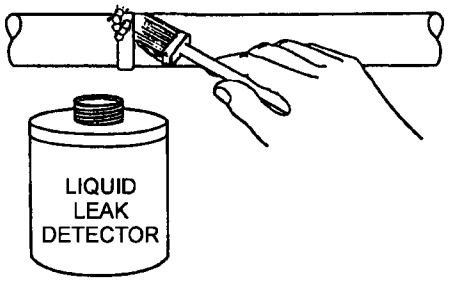

GAS LINE FITTINGS, VALVES, AND CONNECTORS CHECKED FOR GAS LEAKS

13. VENT SYSTEM

- **All Systems**
  - Appliance venting shall be in conformance with manufacturer's instructions, 2001 CMC Chapter 8, and local code.
  - Vent dampers shall not be used.
  - Horizontal vent connectors shall slope upward a minimum of 1/4" per foot of horizontal length (CMC Article 815.3.2.4).
- **Type B and BW Gas Vents (CMC Article 806.4)**
  - Vents with Listed Vent Caps 12" in Size or Smaller
    - The vent shall terminate above a roof per CMC Table 8-1. (minimum 1' above for slopes up to 6/12), provided the vent is located at least 8' from a vertical wall or similar obstruction.
    - Vents within 8' of a vertical wall or obstacle must terminate at least 2' above the wall/obstacle.
- **Vent Terminals (CMC Article 806.6 and 806.7)**
  - Vent systems shall terminate the following minimum distances from doors, operable windows and gravity inlets into a building:
    - 1' above, or 4' below, or
    - 4' horizontally from the door/window/inlet.
  - Vent terminations located within 10' of outside-air, makeup-air, and forced-air inlets shall terminate at least 3' above such inlets.

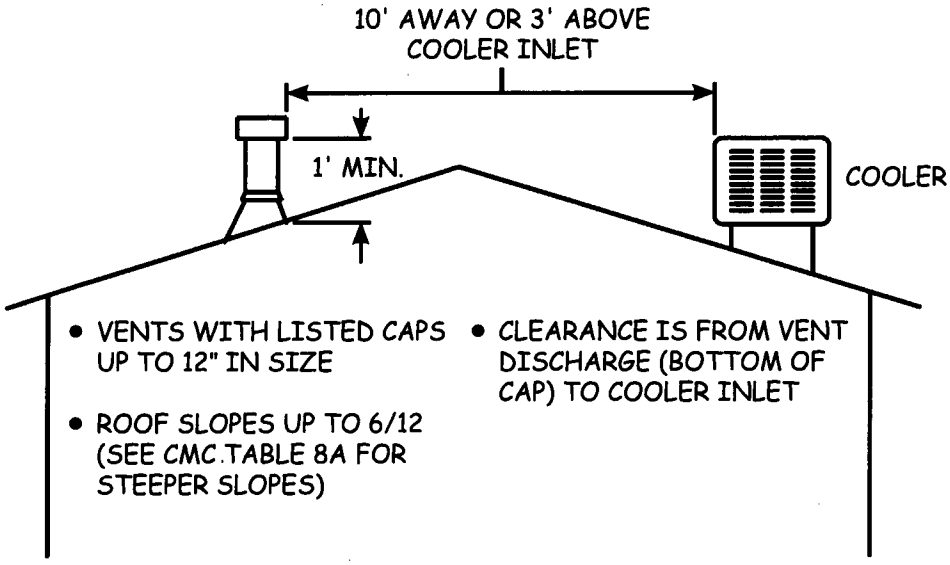

CEILING INSULATION STANDARDS

1. APPROVED MATERIALS

- **All insulation shall be certified to comply with the CCR, Title 24, Part 12, Chapter 12-13, Standards for Insulating Material.**
- **Mineral Fiber**
  - Flexible (Batts): Conformance to ASTM C665.
  - Loose Fill: Conformance to ASTM C764.
- **Mineral Cellular**
  - Vermiculite: Conformance to ASTM C516.
  - Perlite: Conformance to ASTM C549.
- **Cellulose**
  - Loose Fill
    - Licensed for sale in California.
    - Compliance with CPSC 16 CFR, Parts 1209 and 1404, and ASTM C739.
- **Rigid**
  - Preformed Polyisocyanurate Board Foil Faced on Both Sides
    - Conformance to FS HH-1-1972/1.
  - High Density Fiberglass Board: Conformance to ASTM C726.

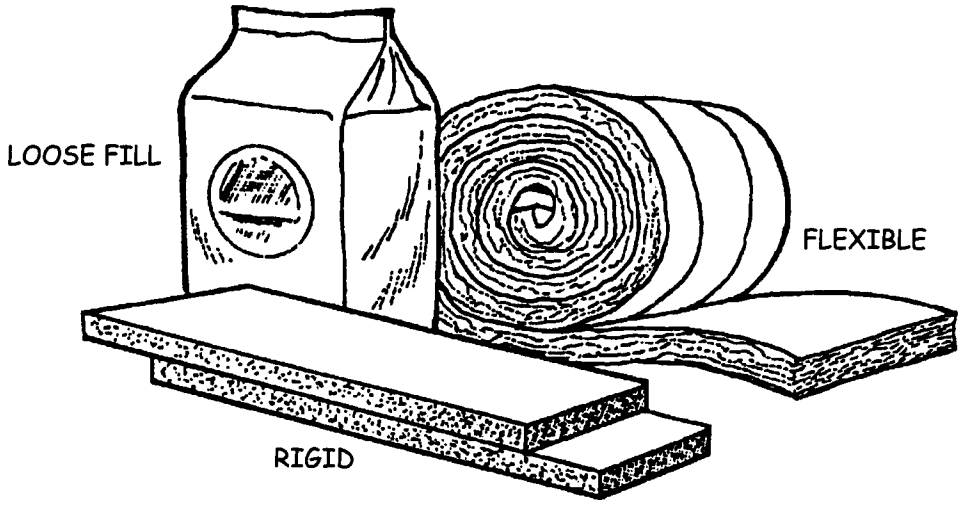

2. **R-VALUES**
   - **R-values shall be in compliance with Table 3-1.**
   - **Attic Floor**
     - CEC Climate Zones 2-15: R-30 total (existing plus added insulation).
     - CEC Climate Zones 1 & 16: R-38 total.
   - **Knee Walls and Skylight Wells**
     - R-13 in walls with 2x4 framing.
     - R-19 in walls with 2x6 framing.
   - **Attic Access**
     - Horizontal: same R-value as attic floor.
     - Vertical: same R-value as knee walls and skylight wells.

3. **LOCATION**
   - **All Insulation**
     - Insulation shall be installed only between conditioned and unconditioned areas.

TABLE 3-1: R-VALUE REQUIREMENTS

LOCATION	CRITERIA	TOTAL R-VALUE
Attic Floor	Climate Zones 2 – 15	R-30*
	Climate Zones 1 & 16	R-38*
Knee Walls & Skylight Wells	2x4 Framing	R-13
	2x6 Framing	R-19
Horizontal Access	Same R-value as Attic Floor	
Vertical Access	Same R-value as Knee Walls & Skylight Wells	

***R-value of existing insulation plus R-value of installed insulation.**

4. STRUCTURAL REQUIREMENTS

- **All Insulation**
  - Ceiling shall be structurally adequate to support weight of installer and installed insulation.
  - Ceiling insulation shall not be installed when roof leaks are present.

5. VAPOR BARRIER

- **All Insulation**
  - Vapor barrier is required only on flexible mineral fiber.
  - Vapor barrier shall not be installed over existing insulation.
  - When installed, vapor barrier shall be:
    - Placed toward winter warm side (e.g., directly on attic floor).
    - Rated no higher than 1 perm.
  - When existing batts are incorrectly installed with vapor barrier on top (upward):
    - Vapor barrier shall be removed from attic, or
    - Batts shall be turned over to place facing against attic floor, or
    - Vapor barrier shall be slashed entire length of batt or across the width of the batt at 12" intervals.

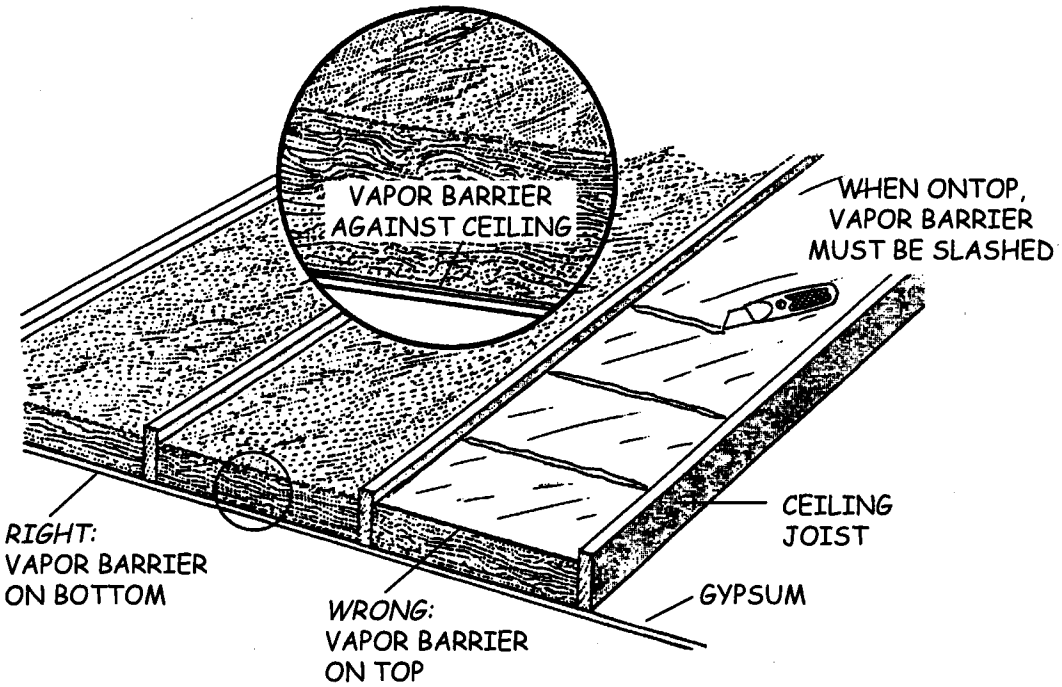

6. ELECTRICAL WIRING

- **All Insulating Materials**
  - Insulation shall not be installed over energized bare wires or wires with frayed or decayed insulation.
- **Loose Fill**
  - Open Junction Boxes
    - Loose fill material shall not cover open junction boxes.
    - Boxes shall be protected with either of the following:
      - Standard cover plates.
      - A minimum 14-1/2" x 12" piece of unfaced batt that covers the box and equals or exceeds height of installed loose fill.
  - Wire Connections Protruding from Junction box
    - Loose fill material shall not cover the wires.
    - Connections shall be protected with either of the following:
      - Box extension and standard cover plate.
      - Mineral fiber blocking which exceeds height of loose fill by 4" and extends away at least 14-1/2" in all directions.
  - Wire Connections Without Junction Box (Spider Web)
    - Wire connections shall not be covered by loose fill material .
    - Connections shall be protected with mineral fiber blocking which exceeds height of loose fill by 4" and extends away at least 14-1/2" in all directions.
  - Knob and Tube Wiring
    - Insulation shall be installed as prescribed in Item 31.

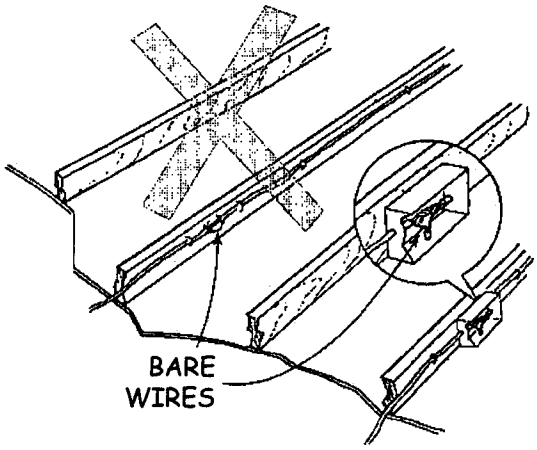

DO NOT INSULATE

7. VENTING

- **All Insulation**
  - For ceiling insulation to be installed, venting shall comply with program policy or the following criteria.
  - Cross ventilation for each separate space is required.
- **Venting Criteria for Altitudes <u>Up to 3000</u> Feet**
  - 1 sq. ft. of Net Free Venting Area (NFVA) required per 300 sq. ft. of ceiling area.
  - 1 sq. ft. to 600 sq. ft. ratio is acceptable if:
    - Vapor barrier placed toward the winter warm side is present, or
    - 50% of the venting is upper venting (±25%), with upper vents located at least 3' higher than low vents, and low vents are eave or soffit venting.
- **Venting Criteria for Altitudes <u>Over 3000</u> Feet**
  - 1 sq. ft. of Net Free Venting Area (NFVA) required per 150 sq. ft. of ceiling area.
  - 1 sq. ft. to 300 sq. ft. ratio is acceptable if:
    - Vapor barrier placed toward the winter warm side is present, or
    - 50% of the venting is upper venting (±25%), with upper vents located at least 3' higher than low vents, and low vents are eave or soffit venting.

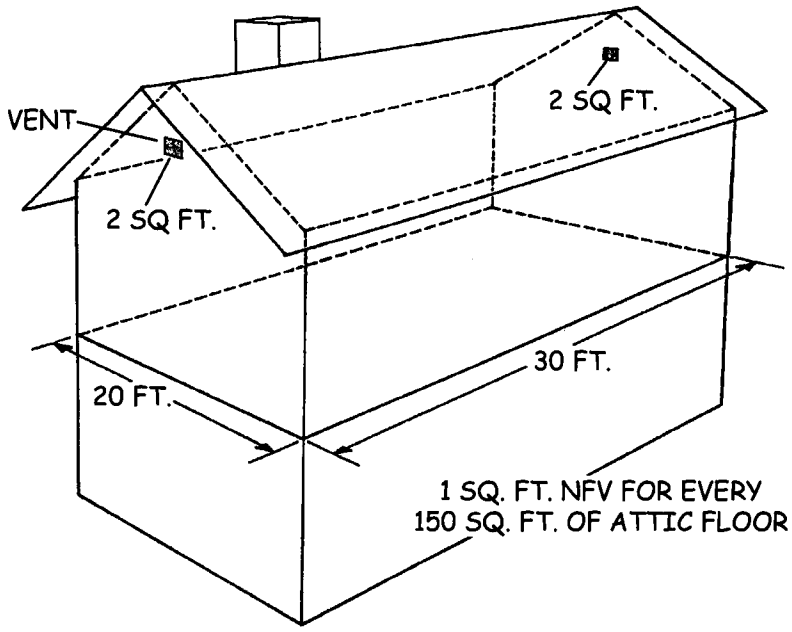

8. KITCHEN AND BATH TYPE EXHAUST SYSTEMS

- **Range hood and bath type exhaust fans shall be blocked per Item 15.**
- **Vent Hose/Duct.**
  - May be covered by loose fill.
  - Shall be unobstructed at its termination (open end).
- **Screened openings shall be blocked per Item 20.**
- **Exhaust Termination**
  - Exhaust systems which terminate in the attic shall be extended to the exterior.
  - The vent pipe shall:
    - Be connected to a roof or wall termination.
    - Have an upward slope (flat run not allowed).
    - Conform to local codes.

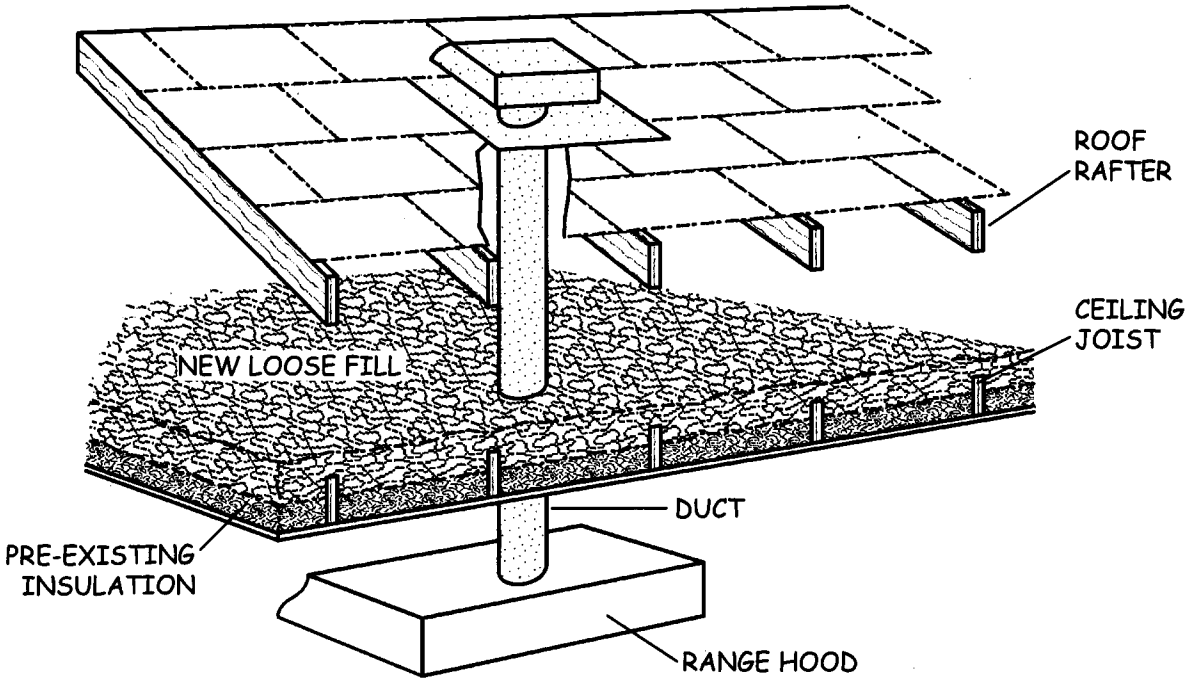

9. PERMANENT BLOCKING

- **Blocking Materials**
  - Batts
    - Flexible mineral fiber, kraft faced or unfaced.
  - Metal
    - Corrosion-resistant metal, minimum 0.007" thick.
    - Blocking shall be mechanically attached to ceiling and/or framing (e.g., with staples, nails, or screws).
  - Eave Vent Chutes and Baffles
    - Commercially available plastic chutes and cardboard baffles, or 0.007" metal.
    - Eave chutes and baffles shall not be used to block HPDs.
    - Maximum flame-spread index of 25 and smoke-developed index of 50, per ASTM E84, UL 723, or NFPA 255.
  - Structural Wood
    - Framing members and attached sheathing (e.g., plywood).
- **Blocking for Loose Fill Insulation**
  - A barrier (blocking and/or structural wood) shall extend from the attic floor to the prescribed height above installed loose fill.
  - Blocking height may be achieved with a combination of structural wood and permanent blocking material.
  - Unfaced and kraft faced flexible blocking may rest on top of other insulation, with vapor barrier facing either up or down.
- **Flexible Insulation**
  - No blocking required where loose fill is not present.
  - When flexible is being installed over loose fill, blocking/barrier shall prevent loose fill from entering clearance zone.

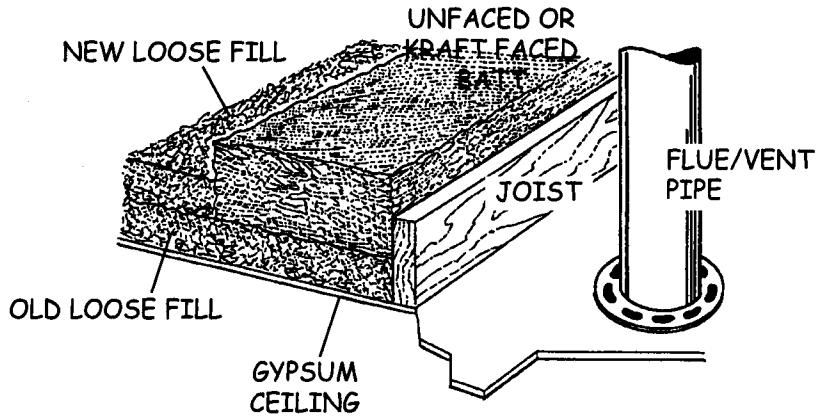

9. PERMANENT BLOCKING (continued)

- **Clearance Zone**
  - Clearance zone shall provide a cleared space free of insulation which surrounds a heat producing device, vent, etc.
  - Clearance from blocking to protected item shall be a minimum of 3" but no greater than necessary to provide proper blocking.
  - After insulation has been installed, the clearance zone shall be free of loose fill material.

10. TEMPORARY BLOCKING COVER

- **Loose Fill**
  - A temporary cover may be placed over permanent blocking to prevent accidental "overblow" of loose fill into clearance zone. The cover shall be removed after insulating.

11. RECESSED LIGHTING FIXTURES

- **Loose Fill**
  - 3" clearance zone required around fixture.
  - Noncombustible blocking required.
  - Blocking in conformance with Item 9 shall rest on attic floor and exceed height of loose fill by 4".
  - Metal blocking material must be at least .007" thick.
  - Metal blocking must be permanently attached to ceiling joist: stapled, nailed, or screwed.
  - Flexible mineral fiber blocking shall extend at least 14-1/2" away from the clearance zone in all directions.
  - If covered, 24" minimum top clearance required.
  - Gypsum enclosures which house recessed fluorescent light fixtures do <u>not</u> require protection from loose fill.
  - Existing wood framing members acceptable as barriers if they exceed the height of the insulation by 4".

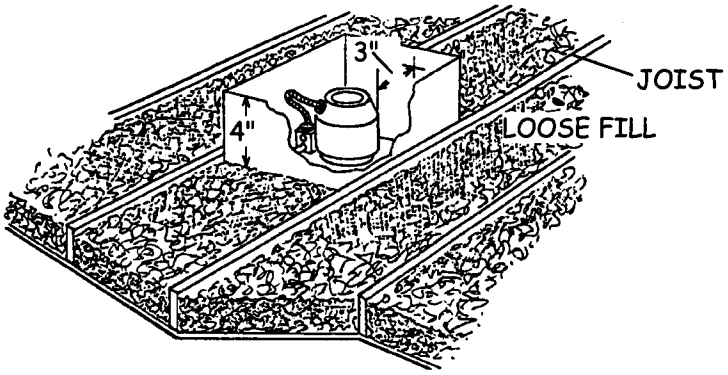

- **Flexible**
  - 3" clearance from fixture required on all sides.

12. TYPE IC (INSULATION COVERED) RECESSED LIGHTING FIXTURES

- **Must meet same clearance as all other recessed lighting fixture.**

13. RECESSED INTERIOR SOFFITS CONTAINING HPDS

- **Loose Fill**
  - Soffits shall be blocked to protect recessed lights and other heat producing devices.
    - Blocking in conformance with Item 9 shall:
      - Extend from the attic floor to 4" above the loose fill.
      - Extend at least 14-1/2" back from the soffit opening when mineral fiber blocking is used.
      - Blocking inside soffit shall be installed in conformance with Items 11 and 12 of this section.
  - Accessible knee walls (12" or higher) shall be insulated in conformance with Item 30 of this section.

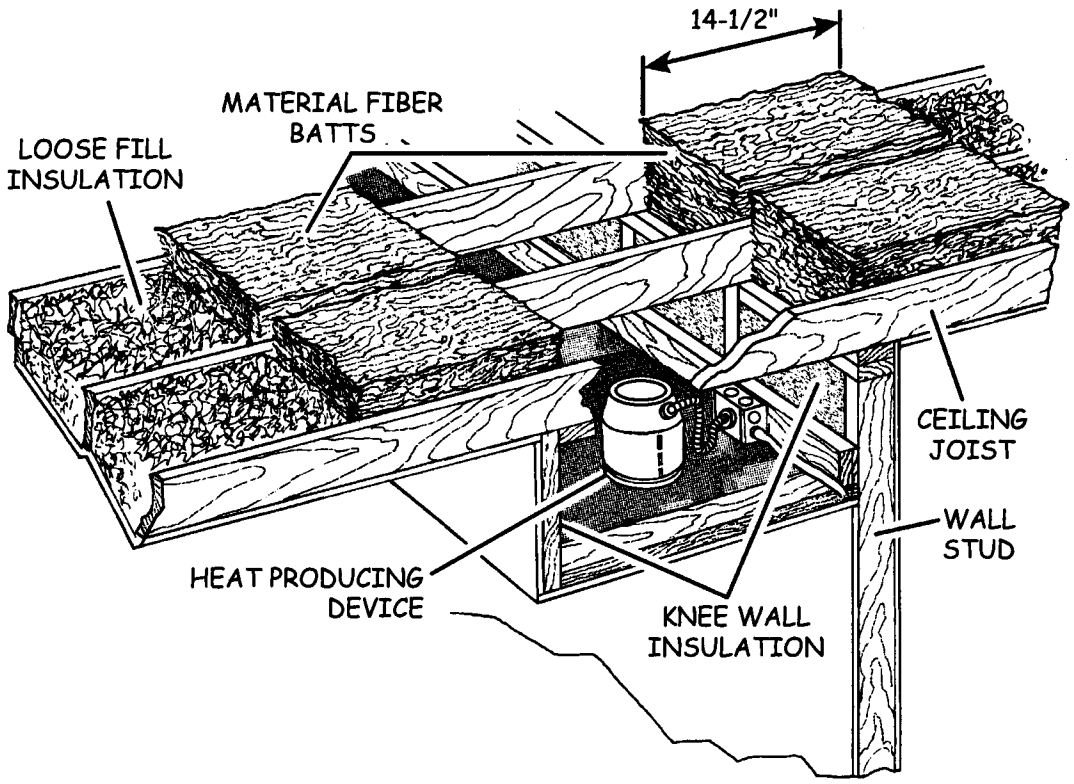

14. DOORBELL TRANSFORMER

- **Loose Fill**
  - 3" clearance zone required around transformer.
  - Noncombustible blocking required.
  - Blocking shall conform to Item 9, rest on attic floor and exceed height of loose fill by 4".
  - Metal blocking must be permanently attached to ceiling joist: stapled, nailed, or screwed.
  - Flexible mineral fiber blocking shall extend at least 14-1/2" away from clearance zone in all directions.
  - If covered, 24" minimum top clearance required.
  - Blocking <u>not</u> required if transformer is mounted above top of insulation.
- **Flexible**
  - 3" clearance from transformer required on all sides.

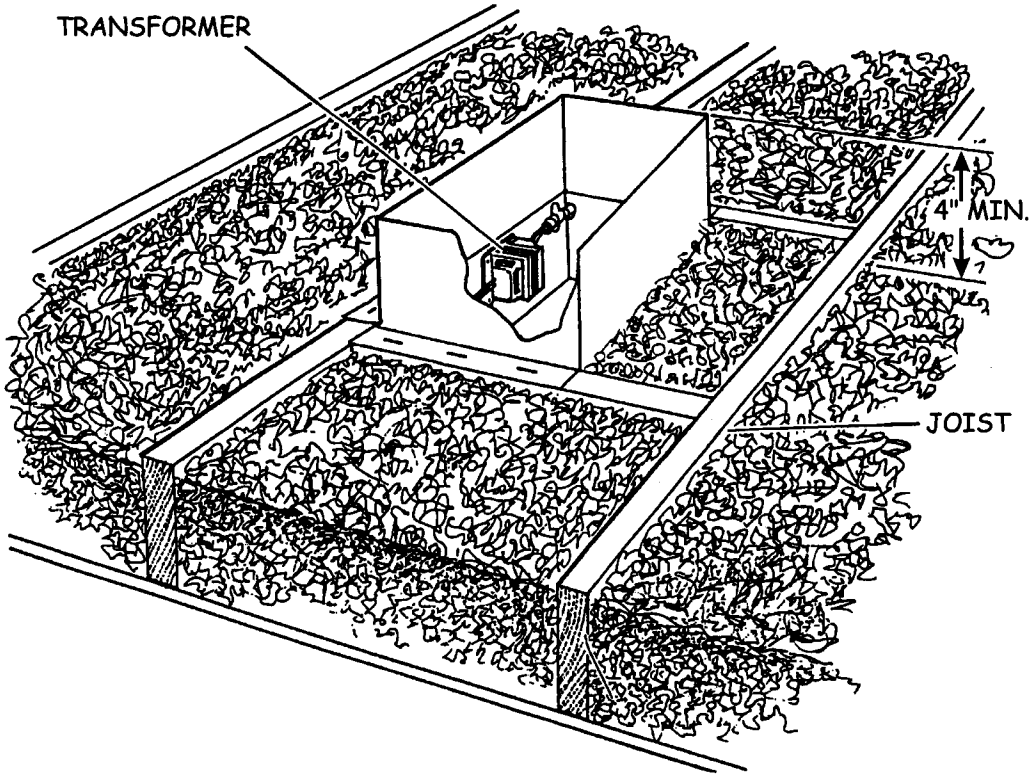

15. FAN MOTORS & MISC. HPDs, INCLUDING EXPOSED FLUORESCENT FIXTURES

- **HPDs include, but not limited to, the following:**
  - Recessed light fixtures.
  - Doorbell transformers.
  - Fan motors.
  - Metal flues.
  - Masonry chimneys.
  - Other heat producing devices.
- **Abandoned vent pipes must be blocked or removed.**
- **Loose Fill**
  - 3" clearance zone required around HPD.
  - Noncombustible blocking required.
  - Blocking in conformance with Item 9 shall exceed height of loose fill by 4".
  - Flexible mineral fiber blocking shall extend at least 14-1/2" away from clearance zone in all directions (as illustrated in Item 17).
  - When cover/insulation is placed above an HPD, cover/insulation shall be at least 24" above the HPD.
- **Flexible**
  - 3" clearance from HPD required on all sides.

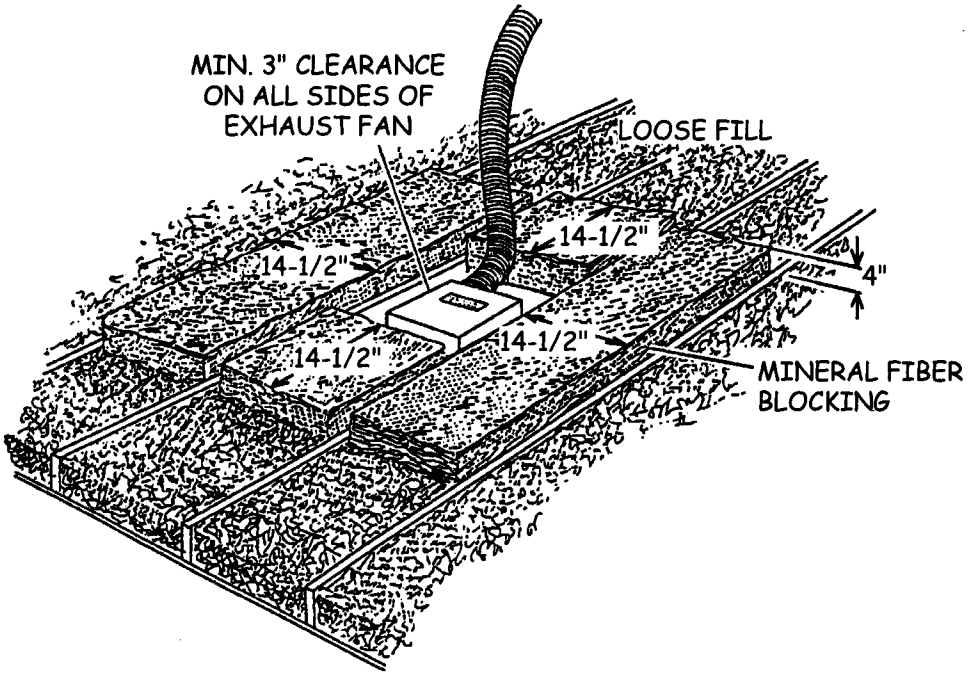

16. WHOLE-HOUSE FANS

- **Loose Fill**
  - Blocking required, even when a shroud is present on the fan.
  - 3" clearance zone required for fan motor.
  - Blocking in conformance with Item 9 shall rest on attic floor and exceed height of insulation by 4".
  - Flexible mineral fiber blocking shall extend at least 14-1/2" away from clearance zone in all directions.
- **Flexible**
  - 3" clearance required for fan motor.

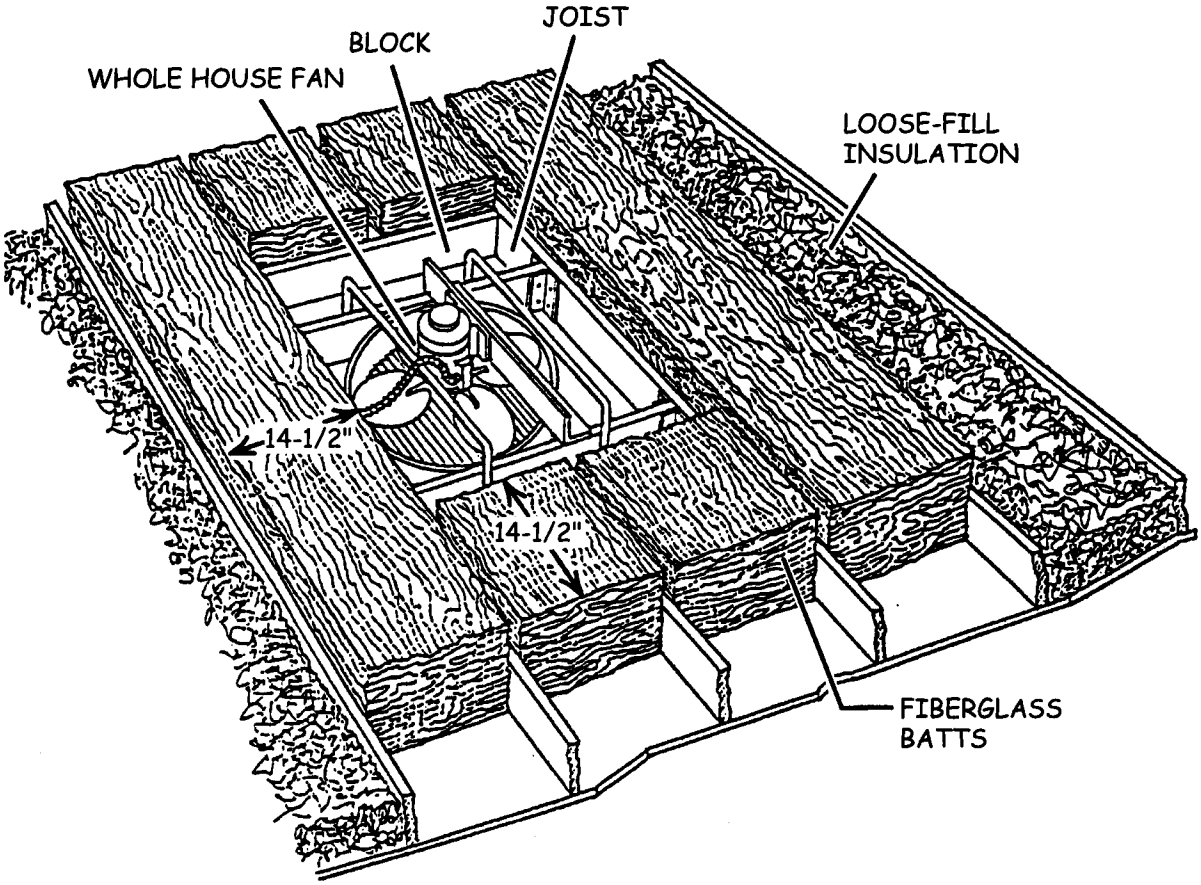

17. GAS AND SOLID FUEL VENT AND FLUE PIPES AND MASONRY CHIMNEYS

- **Loose Fill**
  - 3" clearance zone required around HPD.
  - Noncombustible blocking required.
  - Blocking in conformance with Item 9 shall rest on attic floor and exceed height of insulation by 4".
  - Flexible mineral fiber blocking shall extend at least 14-1/2" away from clearance zone in all directions.
- **Flexible**
  - 3" clearance from HPD required on all sides.
- **Abandoned pipes shall be blocked or removed.**

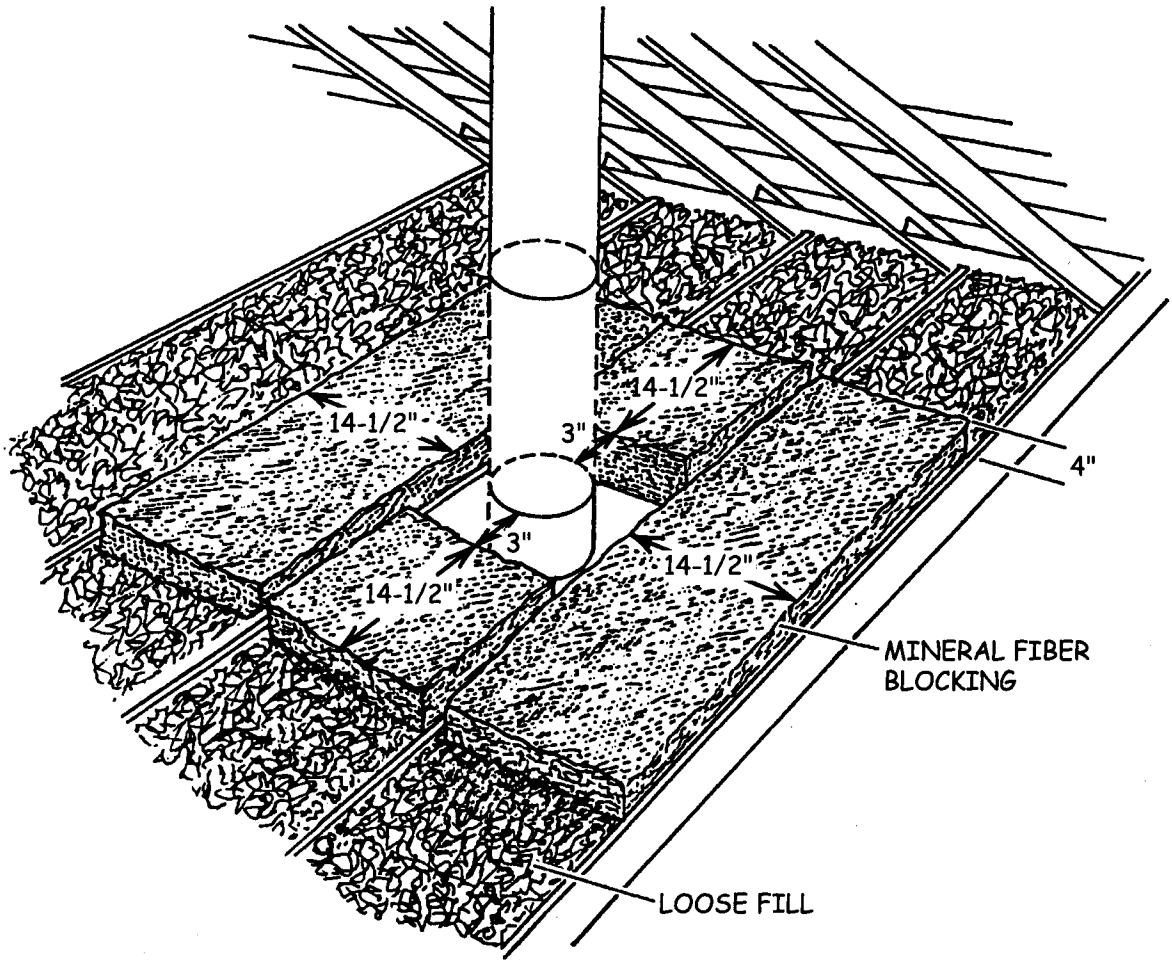

18. FURNACES AND HEAT PUMPS LOCATED IN ATTICS

- **Loose Fill**
  - A clearance zone is required around all units.
    - 12" clearance around back, sides, and top.
    - 24" clearance in front.
    - 3" clearance for flues pipes.
  - Blocking in conformance with item 9 required unless bottom of unit is more than 4" above loose fill.
  - Blocking shall rest on the attic floor and exceed height of loose fill by 4".
  - Flexible mineral fiber blocking shall extend at least 14-1/2" away from clearance zone in all directions.
  - "Overblow" shall be cleared from unit and clearance zone.
  - If unit is suspended or draws combustion air from the bottom:
    - 12" clearance shall be provided below unit, or
    - Flexible insulation shall be installed below which extends 12" beyond unit on all sides (no exposed loose fill beneath unit).
- **Flexible**
  - 12" clearance required on all sides; 3" clearance for flue pipes.
  - 6" clearance below units drawing combustion air from bottom.
- **Platforms and Catwalks**
  - Insulation shall be installed underneath both when accessible.
  - Insulation shall <u>not</u> be installed on top of platforms.

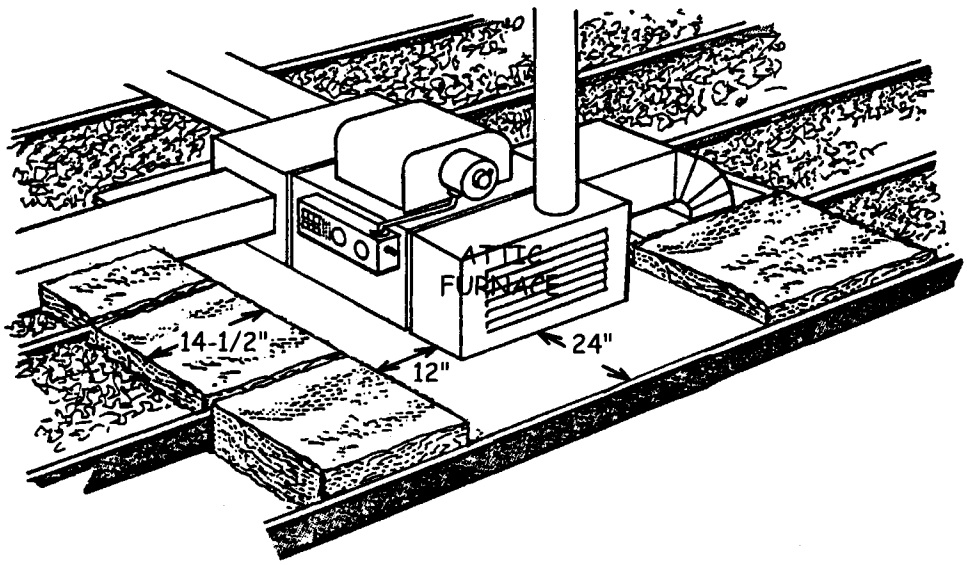

19. WATER HEATER LOCATED IN ATTIC

ELECTRIC UNITS

- **Loose Fill**
  - 3" clearance zone required around unit.
  - Blocking in conformance with item 9 required if bottom of unit is below top of installed loose fill.
  - Blocking shall be noncombustible, conform to Item 9, and equal or exceed height of insulation.
  - Flexible mineral fiber blocking shall extend at least 14-1/2" away from clearance zone in all directions.
  - Insulation "overblow" shall be cleared from unit, clearance zone, and platform.
- **Flexible**
  - 3" clearance from unit required on all sides.

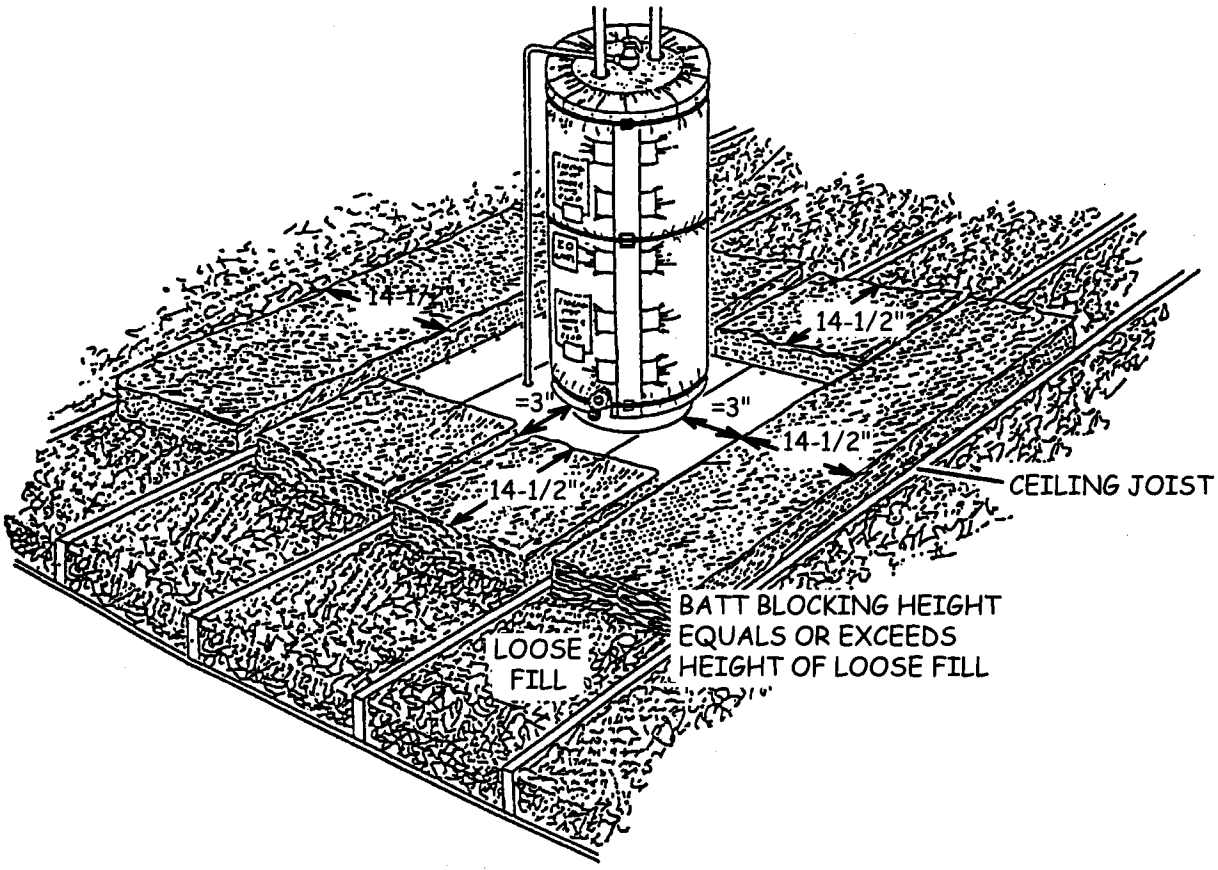

19. WATER HEATER LOCATED IN ATTIC (continued)

GAS UNITS

- **Loose Fill**
  - A clearance zone is required around the unit.
    - 6" clearance around sides and back.
    - 12" clearance in front.
    - 3" clearance for flues.
  - Blocking in conformance with item 9 required if bottom of unit is not at least 4" above installed loose fill.
  - Blocking material shall be noncombustible and exceed height of loose fill by 4".
  - Flexible mineral fiber blocking shall extend at least 14-1/2" away from clearance zone in all directions.
  - Insulation "overblow" shall be cleared from unit, clearance zone, and platform.
- **Flexible**
  - 6" clearance from unit required on all sides.
  - 3" clearance required for flues.

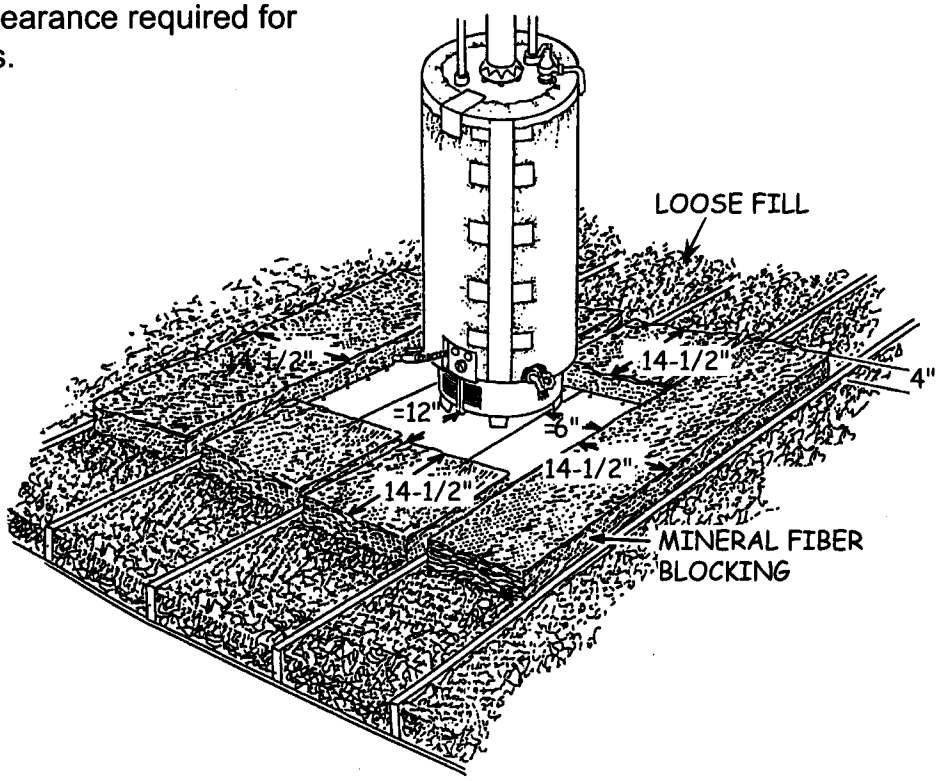

20. COMBUSTION AIR SUPPLY

- **Loose Fill**
  - Blocking required.
  - Must not obstruct air supply.
  - Blocking shall conform to Item 9, rest on the attic floor, and exceed height of loose fill by 4".
  - Flexible mineral fiber blocking shall extend at least 14-1/2" away from vent opening in all directions.
  - Any insulation which blocks the screen shall be removed.
  - Blocking may be either flexible fiberglass batts or metal barriers.
- **Flexible**
  - Must not obstruct air supply.

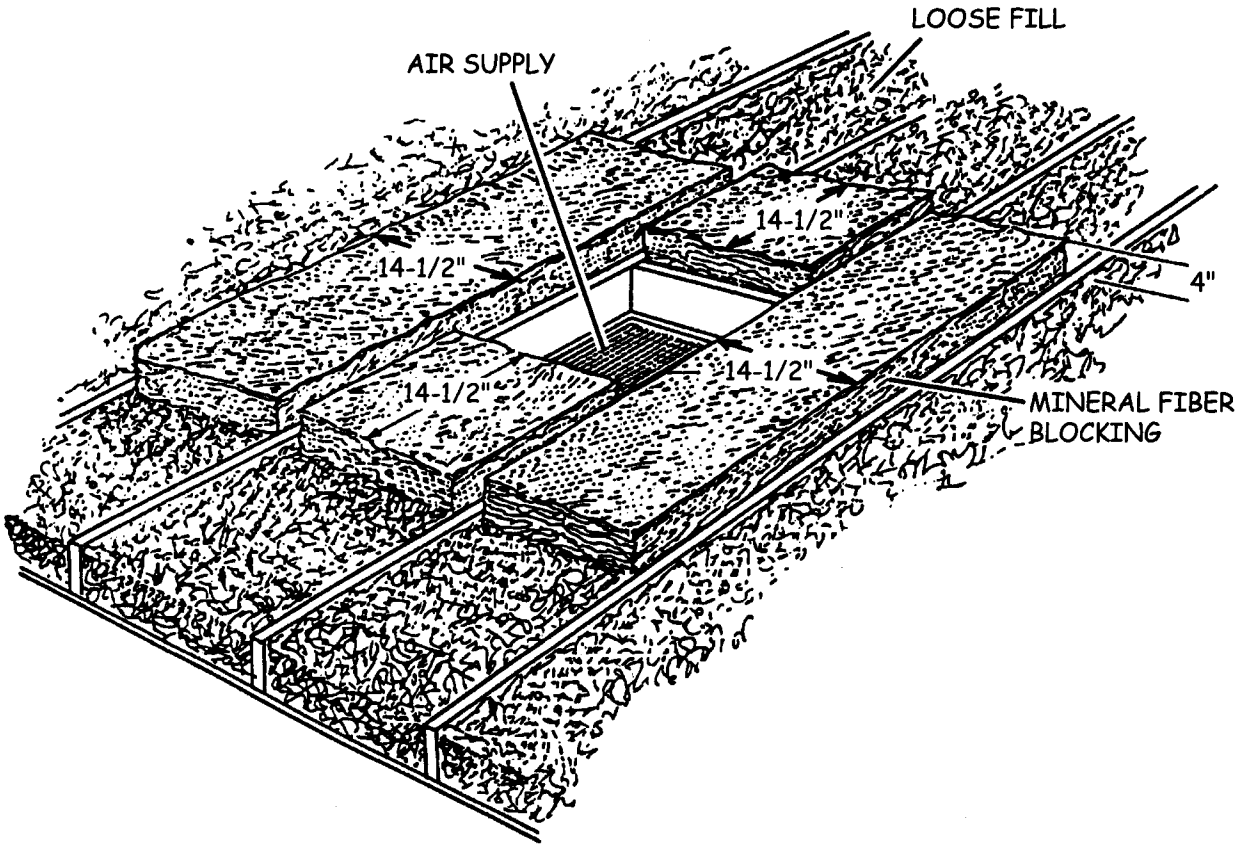

21. CLOSET OPENINGS

- **All Insulation**
  - Combustion Air Supply
    - When closet opening is used for combustion air supply, it shall be blocked per item 20.
  - Ceiling Vents Not Used for Combustion Air
    - The opening shall be sealed and covered with insulation.
    - Vents shall be sealed with minimum 1/2" gypsum or plywood or minimum 0.007" metal.
    - Vents shall not be sealed with mineral fiber batts or foam board.

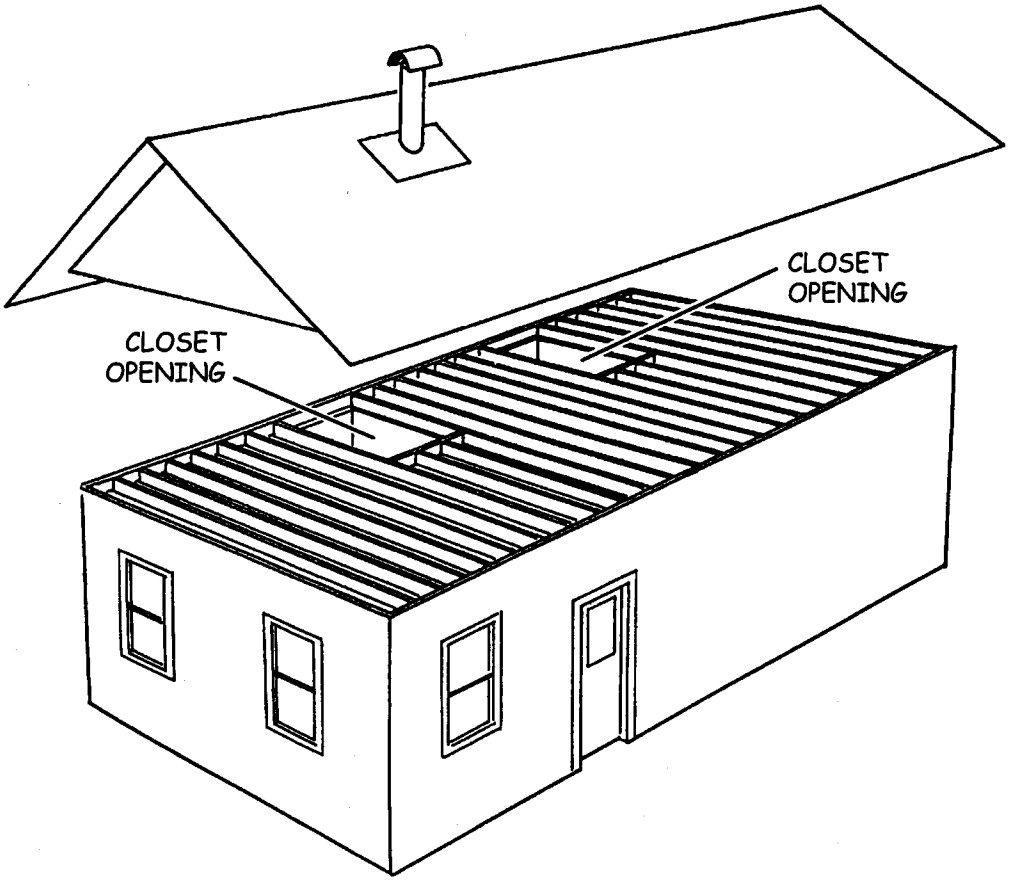

22. ATTIC ACCESS DOOR BLOCKING

- **Loose Fill**
  - Each access must be blocked.
  - Blocking shall conform to Item 9, and extend from the attic floor to the top of the installed loose fill.
    - Flexible mineral fiber batts shall extend at least 14-1/2" away from access opening in all directions.
    - Metal barrier material shall not be installed.
  - 2-by joists and other wood members:
    - Where wood extends from attic floor to top of installed loose fill, additional blocking is not required.
    - Where wood extends from attic floor but does not equal height of installed loose fill, blocking shall be added.
      - Mineral fiber batt may be used in combination with wood members to achieve required height.
      - Unfaced batt may be placed on top of existing loose fill.
    - Where wood is not present, flexible mineral fiber blocking shall rest on the attic floor.
- **Flexible**
  - Blocking is required only where unblocked loose fill is present at the access opening.

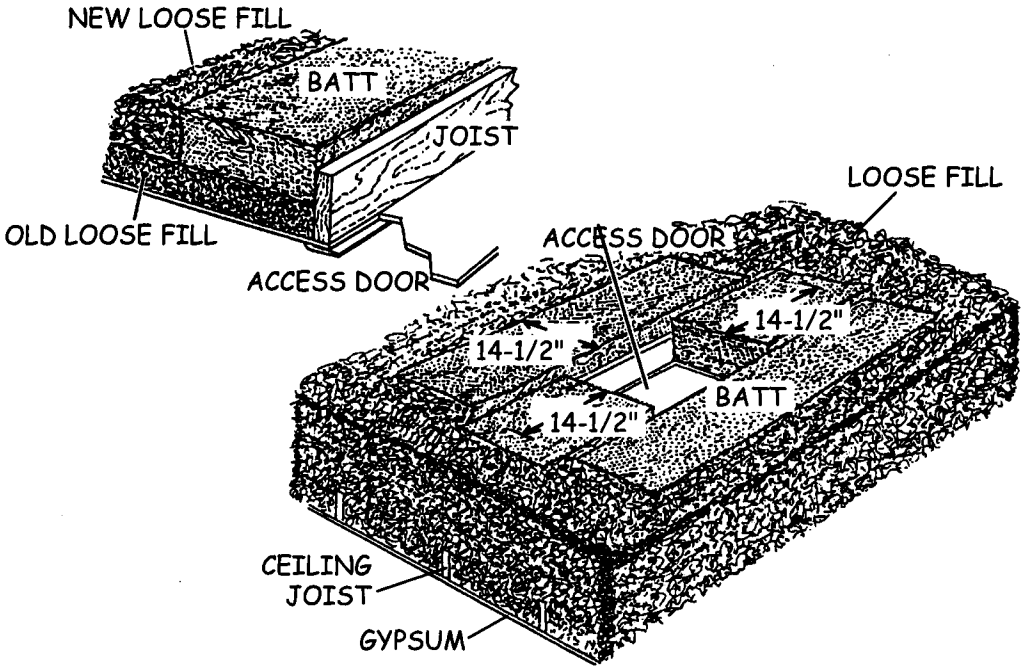

23. ATTIC ACCESS DOOR INSULATION

- **All Insulation**
  - All attic entry doors accessed from conditioned space shall be insulated in accordance with Table 3-1:
    - Horizontal: same R-value as attic floor.
    - Vertical: same R-value as knee walls and skylight wells.
    - Rigid or flexible insulation shall be used.
    - Insulation shall be permanently attached.
  - Multiple Accesses
    - All applicable attic entry doors shall be insulated.

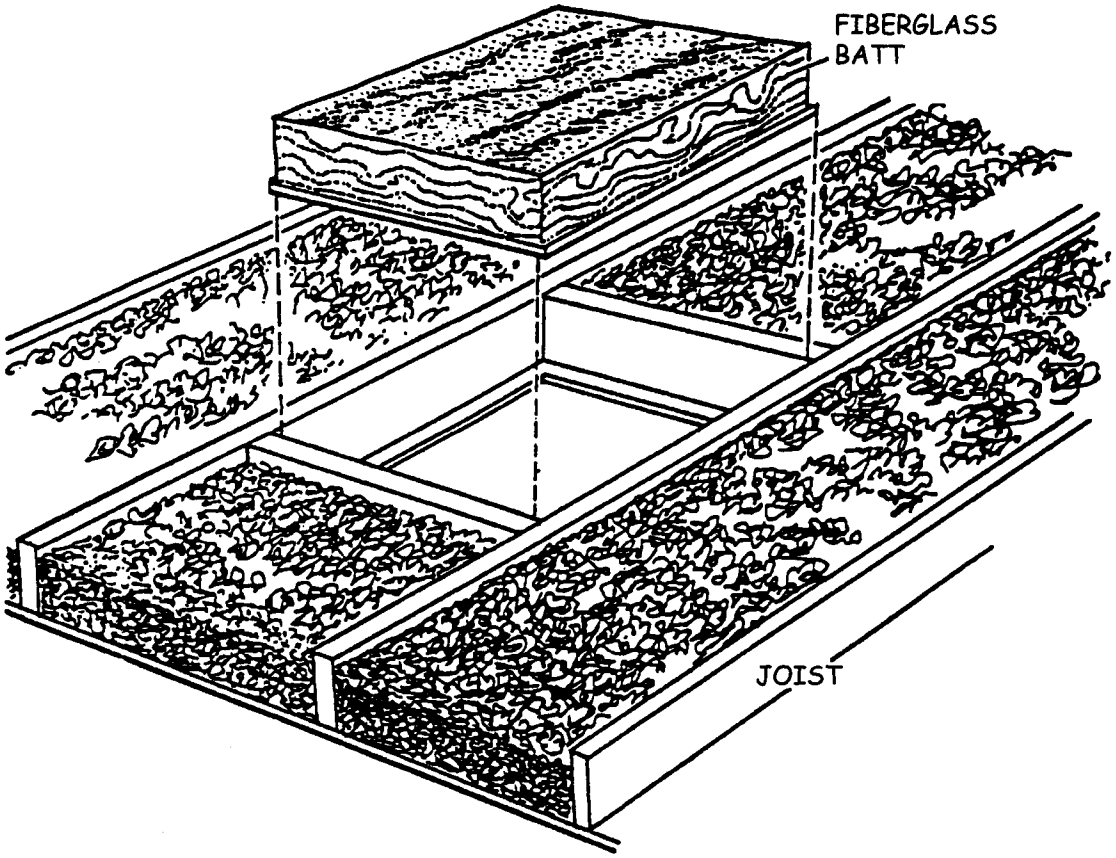

24. ATTIC ACCESS DOOR WEATHERSTRIPPING

- **All Insulation**
  - Only attic entry doors accessed from conditioned space shall be weatherstripped.
  - Horizontal doors
    - Open cell foam is standard.
    - Closed cell foam acceptable if thickness does <u>not</u> create more than 3/16" gap between door and retaining surface.
    - Mounting Surface
      - Weatherstripping shall be installed on surface providing best adhesion (i.e., smooth wood trim rather than textured drywall door).
      - Mounting surface shall be free of dust, dirt and debris.
  - Vertical Doors
    - Materials approved for entry doors shall be used (see Section 2).

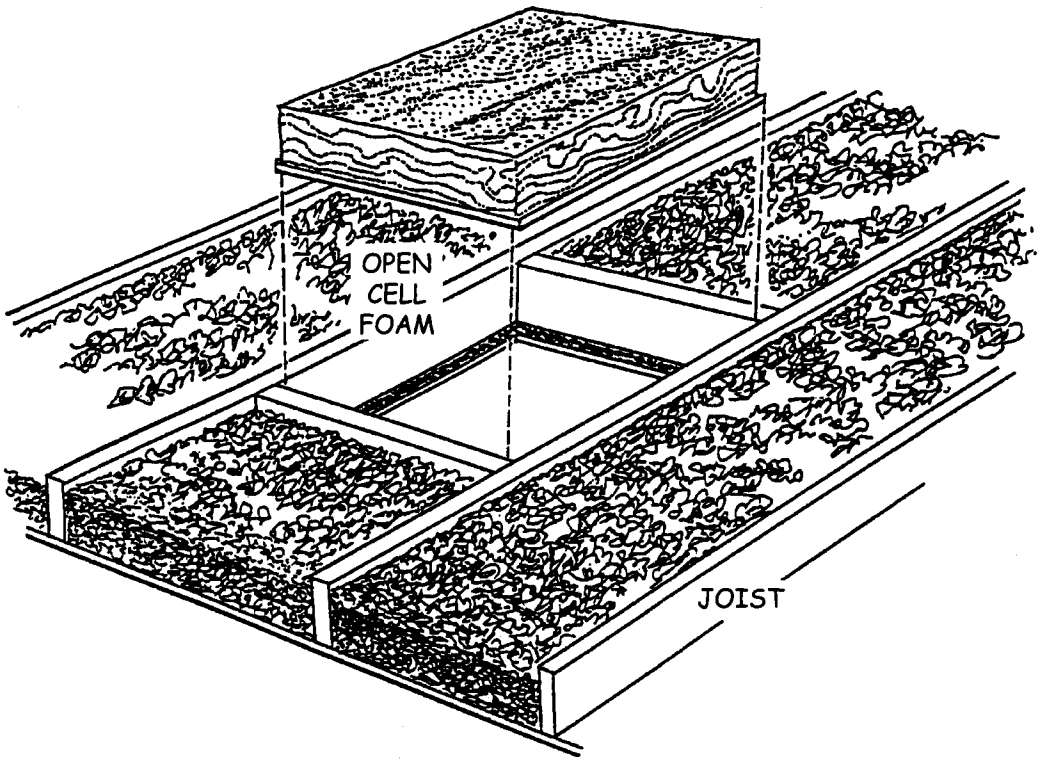

25. DISAPPEARING STAIRS

- **All Insulation**
  - Lid shall be weatherstripped.
  - Lid shall be insulated in accordance with item 2.
  - Hinged lid shall be installed if not already present.
  - Insulation shall be permanently attached to lid.
- **Loose Fill**
  - Blocking shall conform to Item 9 and be installed as prescribed in Item 22.
  - Bottom door shall be weatherstripped as prescribed in Item 24.
- **Flexible**
  - Bottom door shall be weatherstripped.
- **Stairs with Top Lids**
  - Top lid shall be insulated as prescribed in Item 23.
  - Blocking shall be installed as prescribed in Item 22.
  - Top lid shall be weatherstripped as prescribed in Item 24.

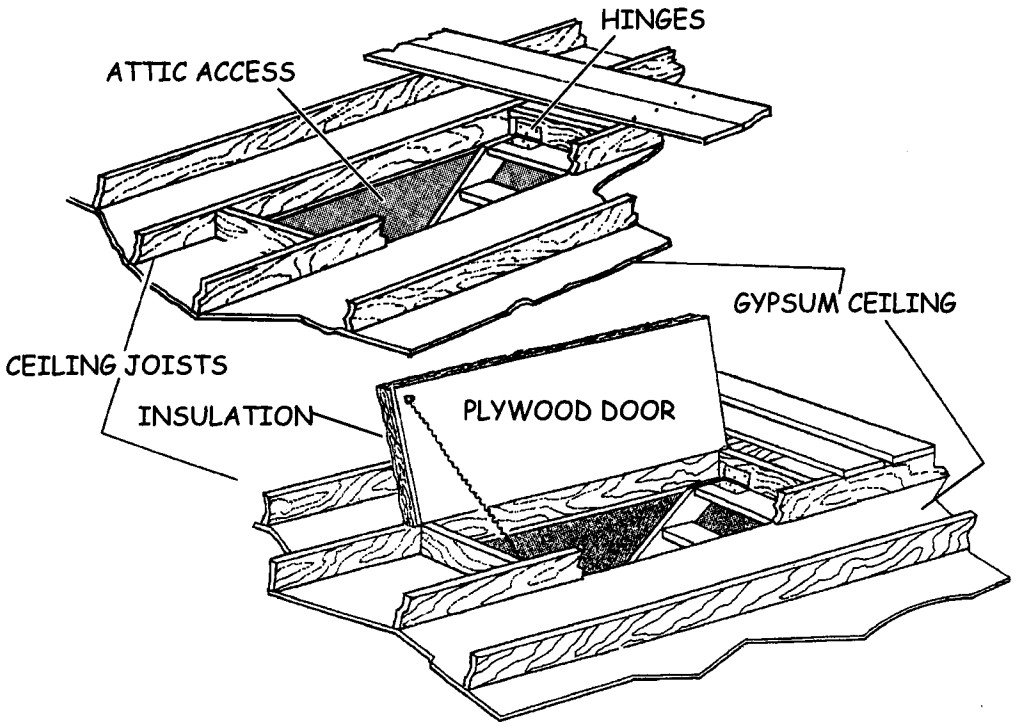

26. OPEN END CAVITIES

- **Loose Fill**
  - Blocking shall be installed to prevent loose fill from spilling out the open end of the joist cavity.
  - Blocking shall confirm to Item 9 and rest on the top plate and exceed the height of loose fill by 4".
  - Metal, noncombustible cardboard chute/barrier material or flexible insulation may be used.
  - Flexible insulation shall extend at least 14-1/2" back from the open end of the cavity.

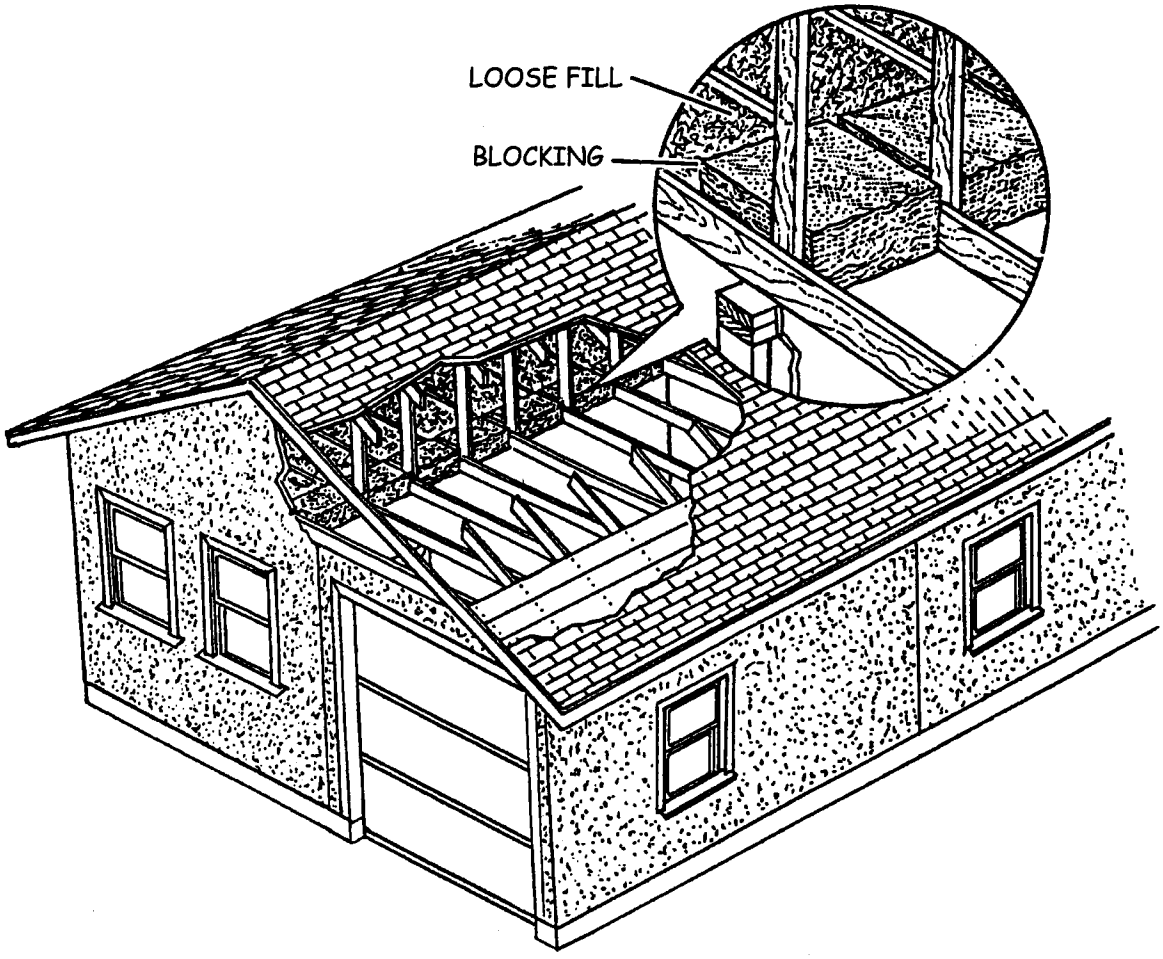

27. EAVE AND SOFFIT VENTS

- **Flexible**
  - Minimum 2-1/2" clearance required between roof sheathing and insulation.
- **Loose Fill**
  - Blocking shall be installed which extends to the top plate (i.e., batt, chute, baffle, etc.).
  - Minimum 2-1/2" clearance required between roof sheathing and blocking.
  - Vent screens shall be free of loose fill.
- **Horizontal Mineral Fiber Blocking**
  - May rest on existing loose fill provided no loose fill is exposed at the top plate.
  - Blocking which extends inward 14-1/2" shall exceed height of the loose fill by 4".
  - Blocking which extends inward 24" shall equal or exceed height of the loose fill.

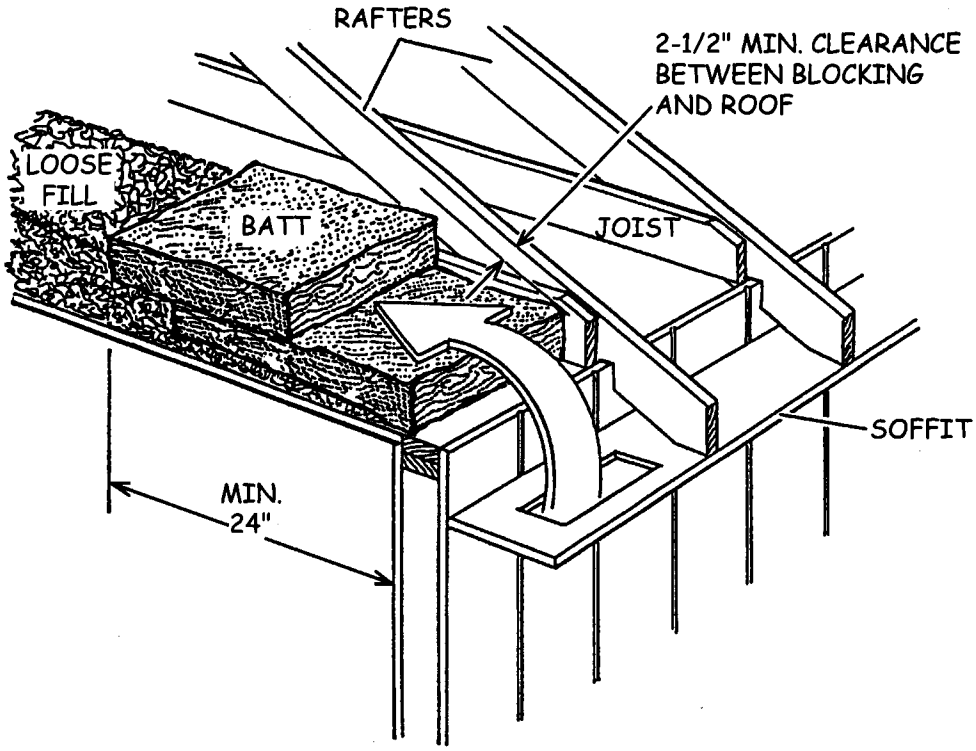

27. EAVE AND SOFFIT VENTS (continued)

- **Restricted Access**
  - Flexible mineral fiber blocking shall be installed.
  - Minimum 2-1/2" clearance between blocking and roof sheathing.
  - Minimum 2-1/2" air path between vent and blocking.
  - Blocking
    - May be placed over existing loose fill if unfaced batt is used and loose fill is not blocking vent.
    - Shall exceed height of loose fill or extend inward at least 24".

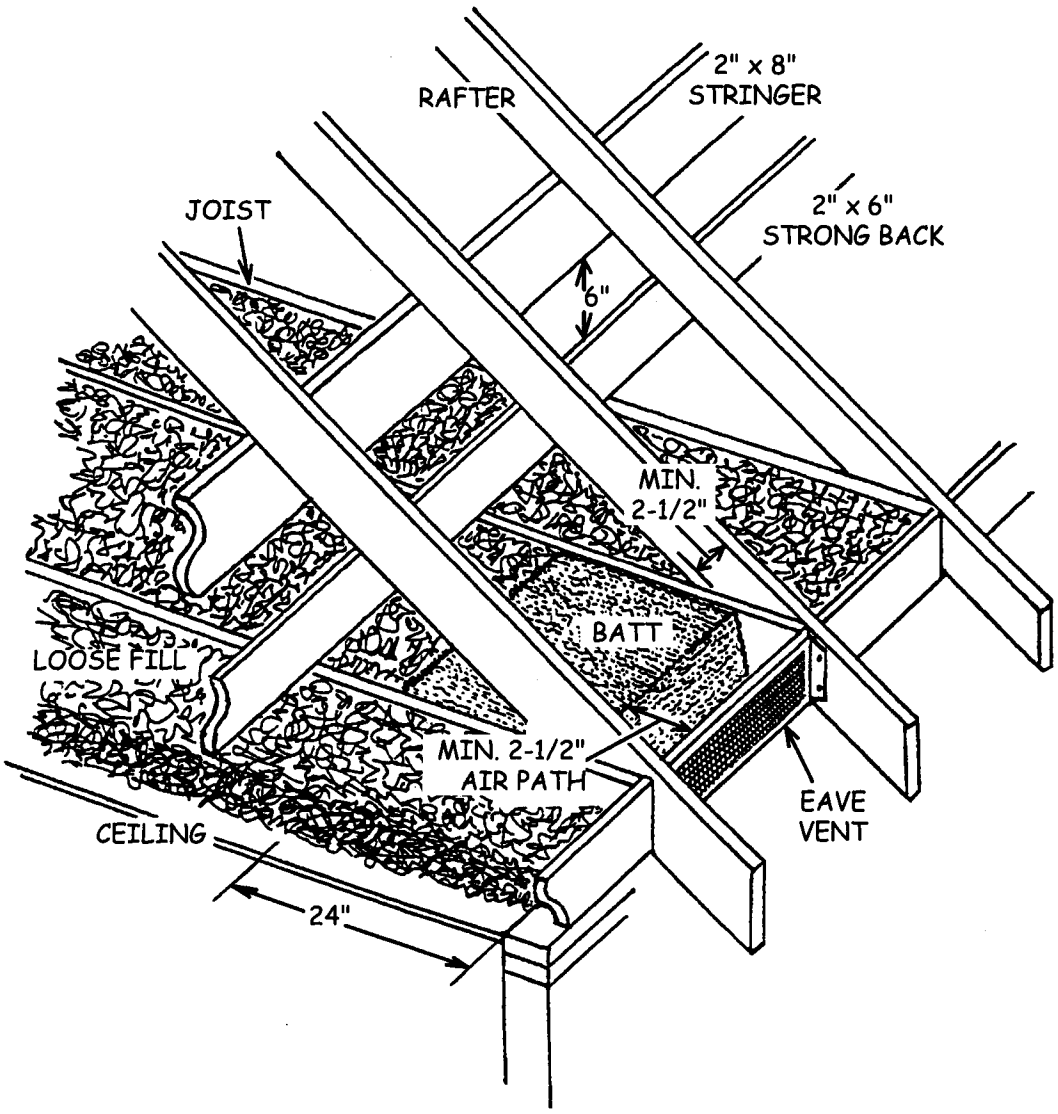

27. EAVE AND SOFFIT VENTS (continued)

- **Restricted Access (HPD Present)**
  - Applies when HPD is less than 18" from an eave/soffit vent and clearance between floor joists and rafters is less than 14" at edge of clearance zone (as illustrated below).
    - Clearance zone shall be free of loose fill.
    - Minimum 3" clearance required between HPD and blocking.
    - Between joists adjacent to the HPD, flexible mineral fiber blocking shall be installed which rests on the attic floor, extends inward at least 14-1/2", and or exceeds height of the installed loose fill by 4".
    - Along the outside of each joist adjacent to the HPD, flexible mineral fiber blocking shall be installed (may rest on existing loose fill) which extends away from the clearance zone at least 14-1/2" and or exceeds height of installed loose fill by 4".

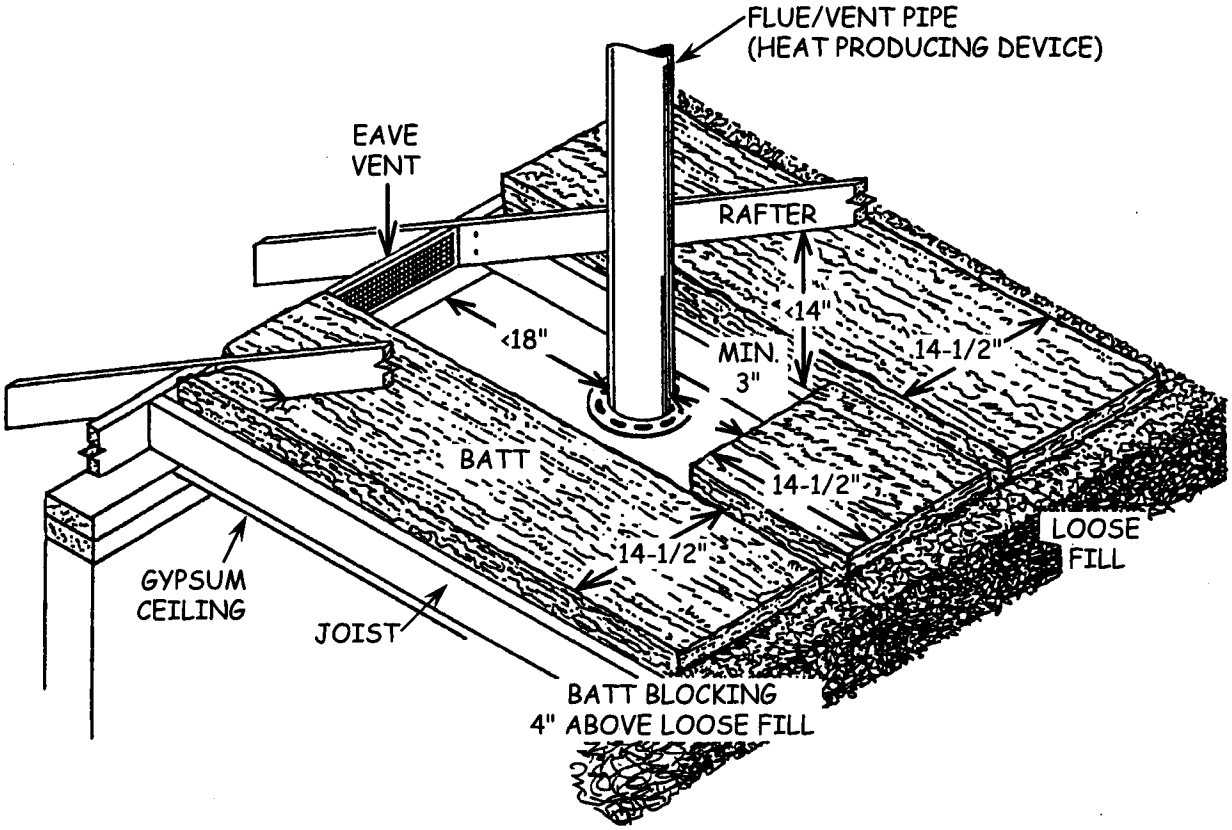

27. EAVE AND SOFFIT VENTS (continued)

- **Baffles and chutes attached to rafters shall:**
  - Rest on the top plate and extend above the loose fill by a minimum of 4" and a maximum of 12".
  - Be permanently attached with a minimum of two mechanical fasteners per rafter.
- **Baffles and chutes may be made of:**
  - Preformed plastic, commercially available.
  - Precut cardboard, commercially available.
  - Minimum .007" metal.
  - Plywood or gypsum.

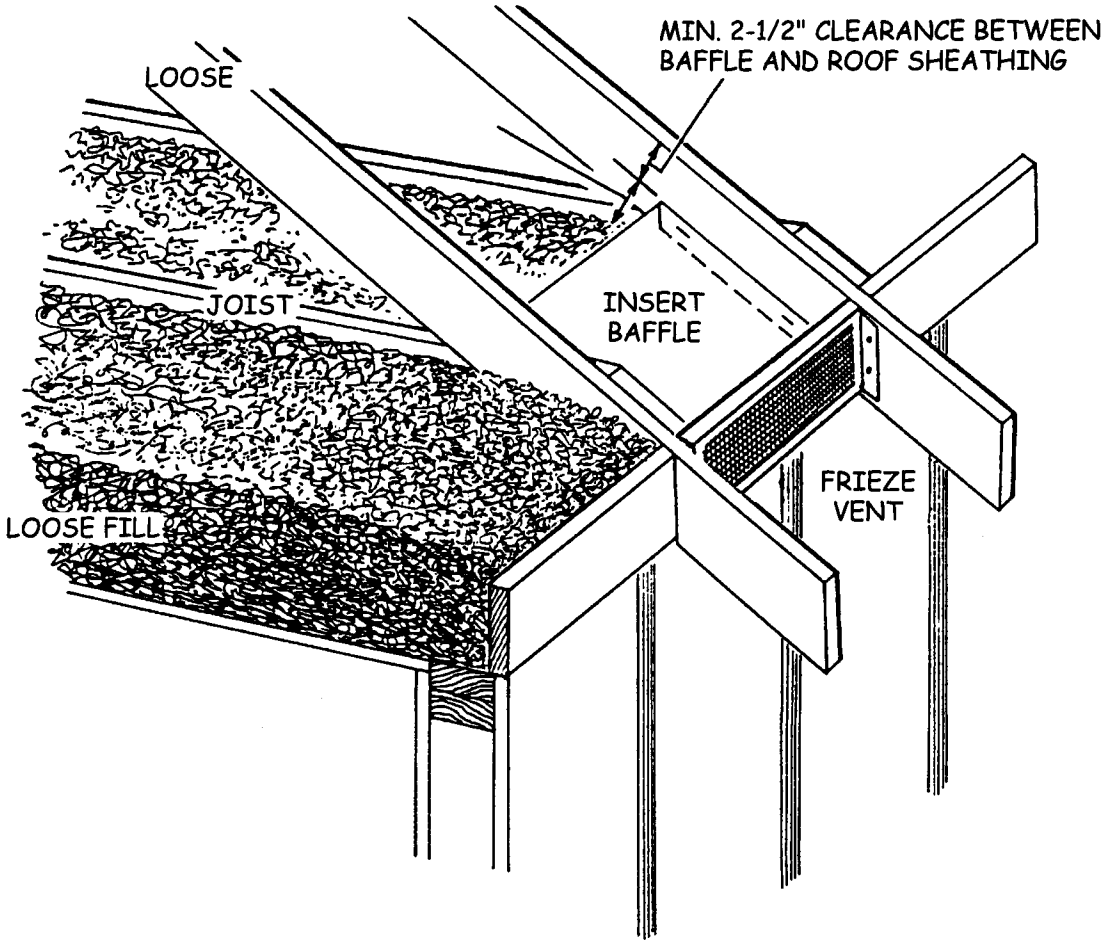

27. EAVE AND SOFFIT VENTS (continued)

- **Preformed Ventilation Chutes**
  - Molded rigid plastic.
  - Minimum air path:
    - 2" x 12" for 16" OC rafters.
    - 2" X 18" for 24" OC rafters.
- **Chutes shall:**
  - Rest on top plate and extend above the loose fill by a minimum of 4" and a maximum of 12".
  - Be permanently attached at the top with at least one mechanical fastener on each side.
  - Be installed in a manner which prevents new loose fill from blowing around the bottom and edges.

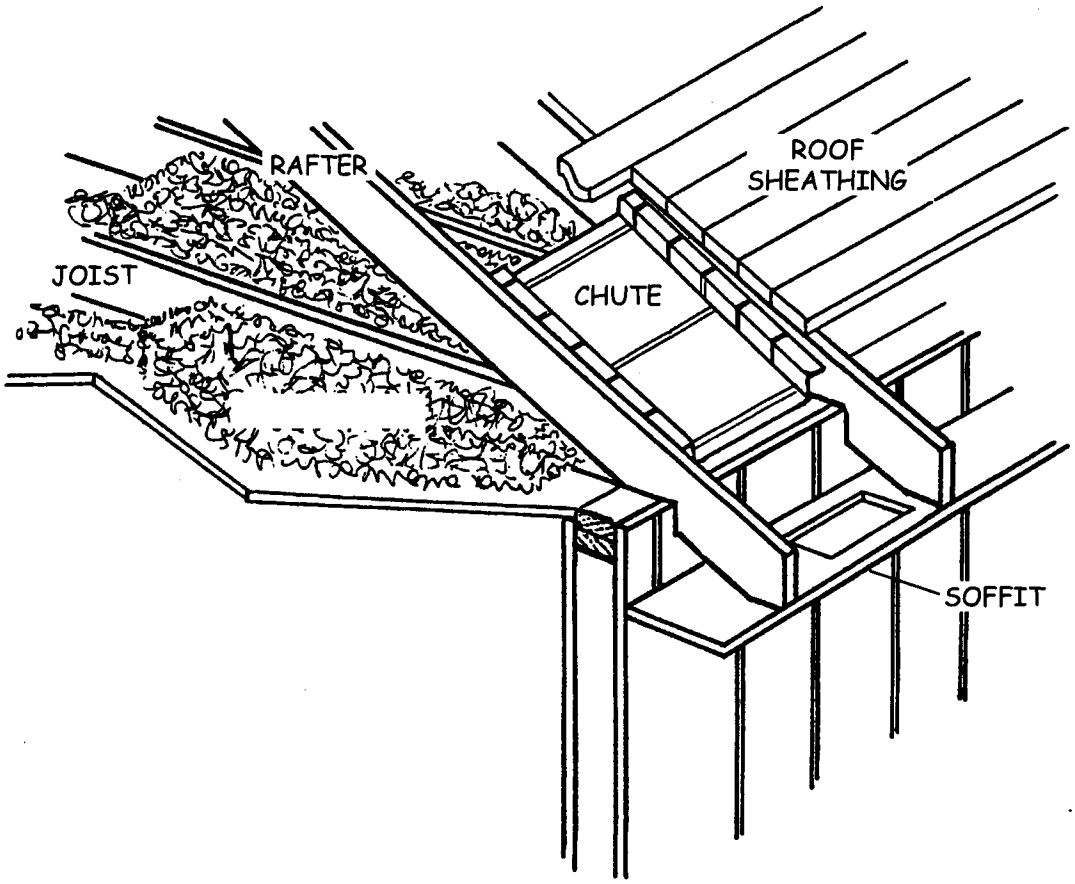

28. CONTINUOUS SOFFIT VENTS

- **All Loose Fill**
  - Blocking in accordance with Item 9 must be installed.
  - Mineral fiber blocking must rest on the attic floor and extend 14-1/2" from the top plate.
  - Minimum 3" clearance between blocking and roof sheathing.
  - Vent chutes must be non-combustible.
  - Vent chutes must extend above the installed loose fill.
  - All nonmetal chutes must be kept 12" away from heat producing devices.
- **Flexible**
  - Minimum 3" clearance required between roof sheathing and insulation.
  - Must rest on attic floor.
- **All Types**
  - Loose fill that falls on the vent screen must be removed.

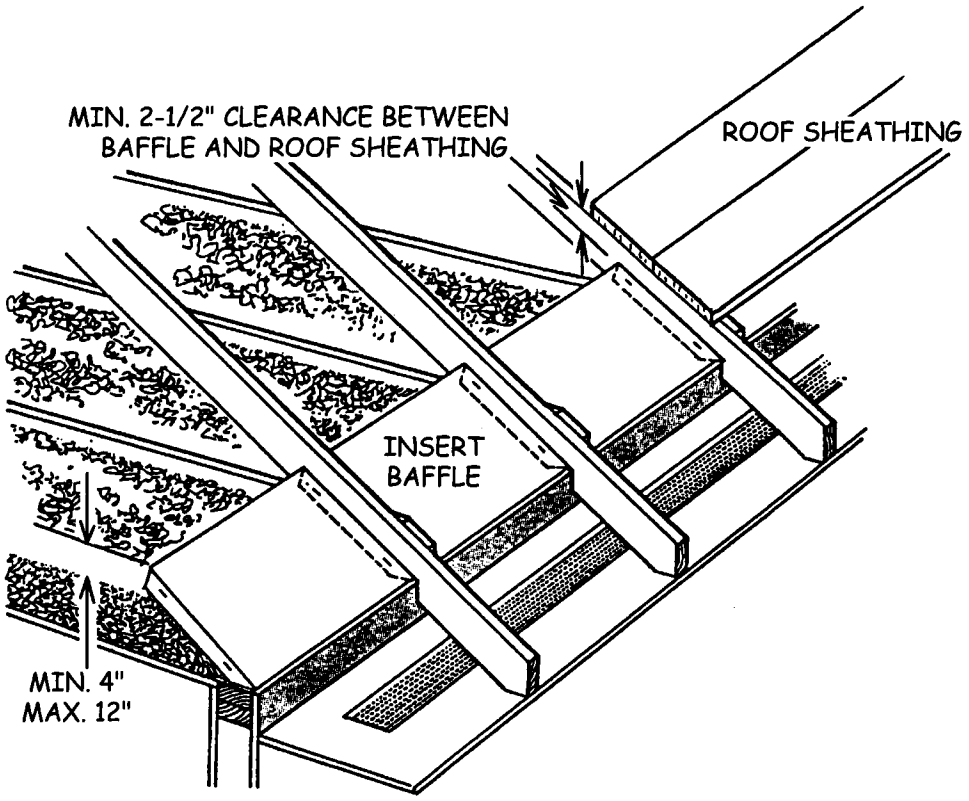

29. BALLOON FRAMING

- **Loose Fill**
  - Blocking in accordance with Item 9 shall be installed to prevent loose fill from falling down into open wall cavities and crawl space or basement.

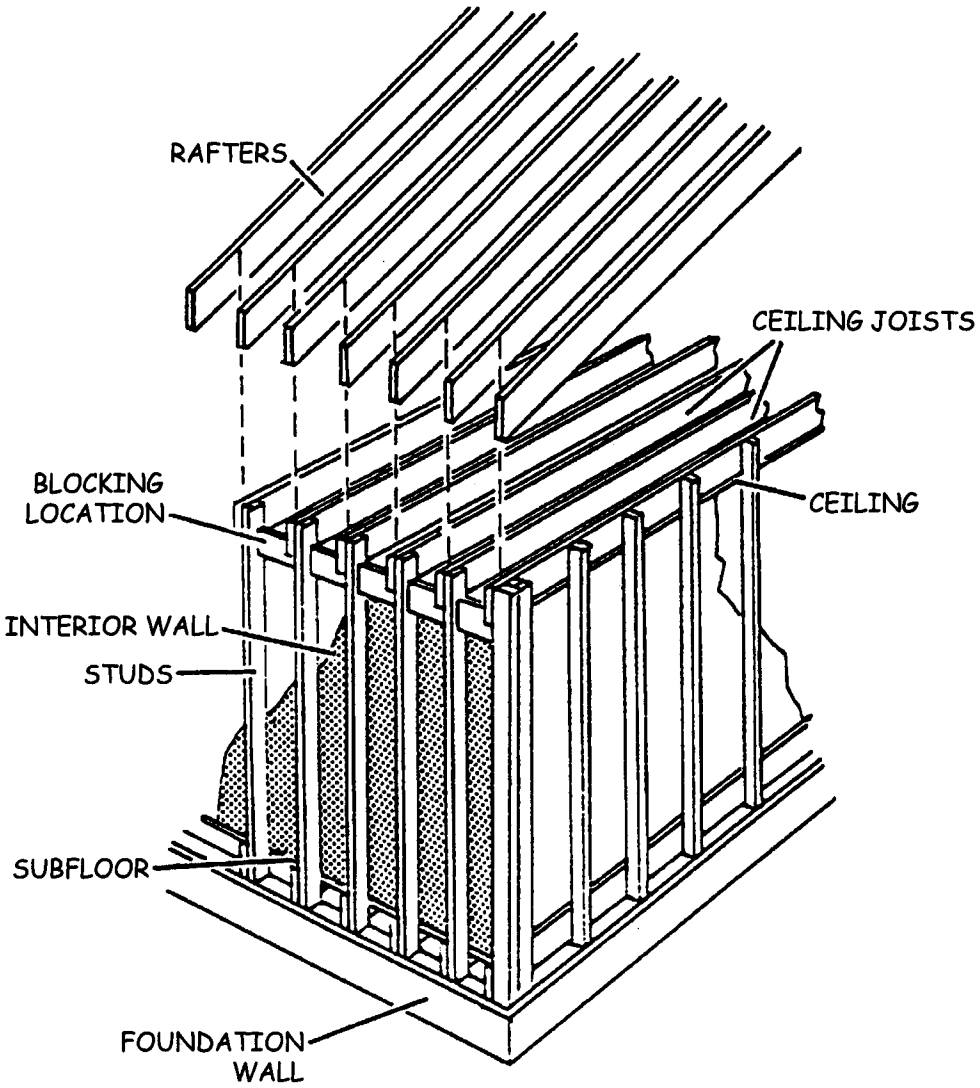

30. KNEE WALLS AND PARTIAL CATHEDRAL CEILING COMBINATIONS

- **Knee Walls & Skylight Wells**
  - Uninsulated knee wall areas over 12" in height after new insulation is installed, and uninsulated skylight wells, shall be insulated to the R-value specified in item 2.
- **Partial Cathedral Ceiling and Knee Wall Combinations**
  - Mineral fiber batt may be installed in partial vaulted ceiling cavities.
  - Minimum 1" air space required between batt and roof sheathing.
  - Loose fill <u>not</u> allowed.

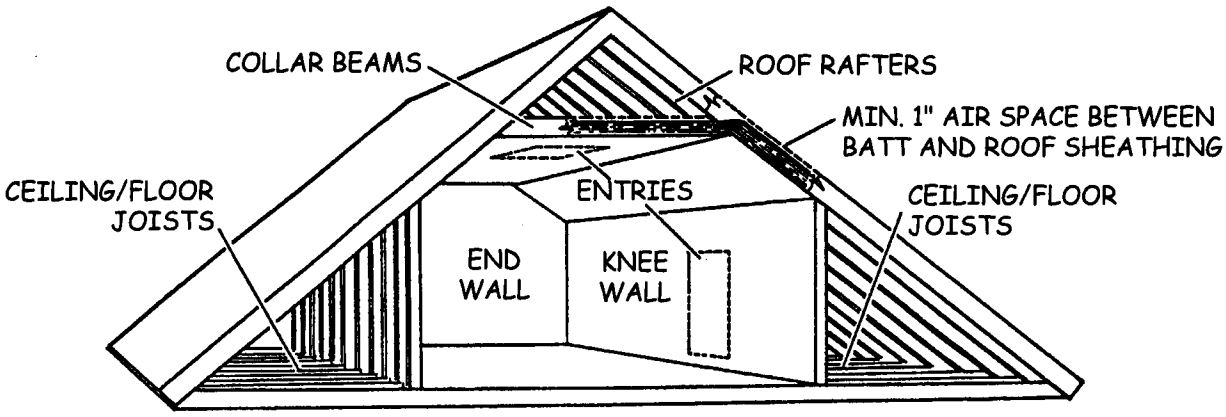

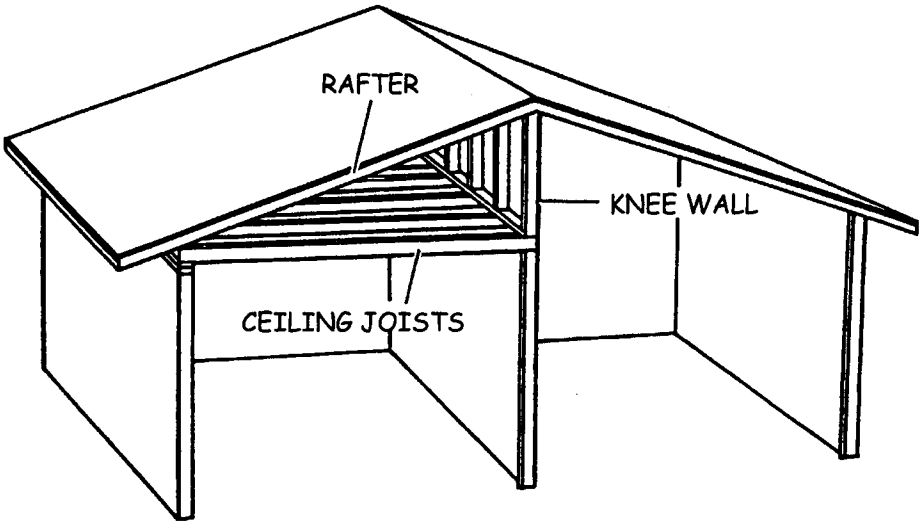

31. KNOB-AND-TUBE WIRING

- **Insulation which encapsulates knob and tube wiring shall not be installed when prohibited by local code.**
- **All Insulation**
  - Attic with knob-and-tube wiring shall not be insulated unless the wiring has been surveyed by an electrical contractor and certified to be:
    - Live and acceptable for encapsulation, or
    - Abandoned and disconnected.
  - All provisions of this section and Article 324, Section 324-4 of the 1998 (or currently adopted) California Electrical Code shall be met.
- **Certification of Wiring by Electrical Contractor**
  - Certification shall be provided by a C-10 electrical contractor licensed by the State of California.
  - The electrical contractor shall survey all knob-and-tube wiring located in all areas to be insulated and shall complete a "Notice of Survey by Electrical Contractor" (example on page 3-35) prior to installation of ceiling insulation.
  - A copy of the "Notice of Survey by Electrical Contractor" shall be provided to the local jurisdiction and the property owner when insulation is installed.

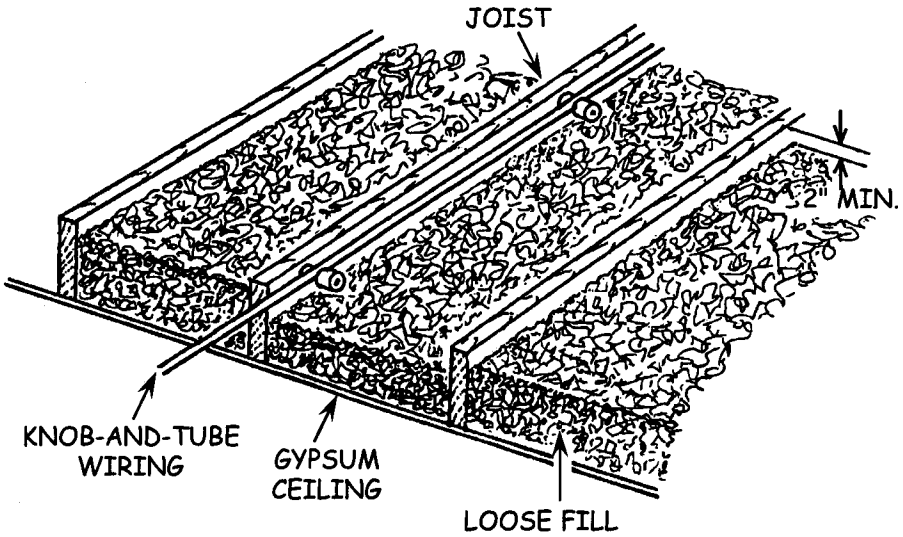

31. KNOB-AND-TUBE WIRING (continued)

- **Live Knob-and-Tube Wiring**
  - Attics with knob-and-tube wiring may be insulated if:
    - The knob-and-tube wiring is certified to be acceptable for encapsulation, i.e., in good condition with no evidence of deterioration or improper overcurrent protection and no improper connections or splices.
    - The knob-and-tube wiring, initially found to be in poor condition, has been upgraded to be acceptable for encapsulation.
  - Insulation which encapsulates live knob-and-tube wiring shall not be installed when the wiring was found to be in poor condition and will not be upgraded to be acceptable for encapsulation.
  - Installation of New Overcurrent Protection
    - The devices shall be a tamperproof type (e.g., Type "S" fuses or circuit breakers).
    - Prior to installation of such devices, the occupant must sign a statement in the "Notice of Survey by Electrical Contractor" acknowledging that he/she understands that existing usage of electrical appliances may cause nuisance tripping of the new overcurrent protection devices.

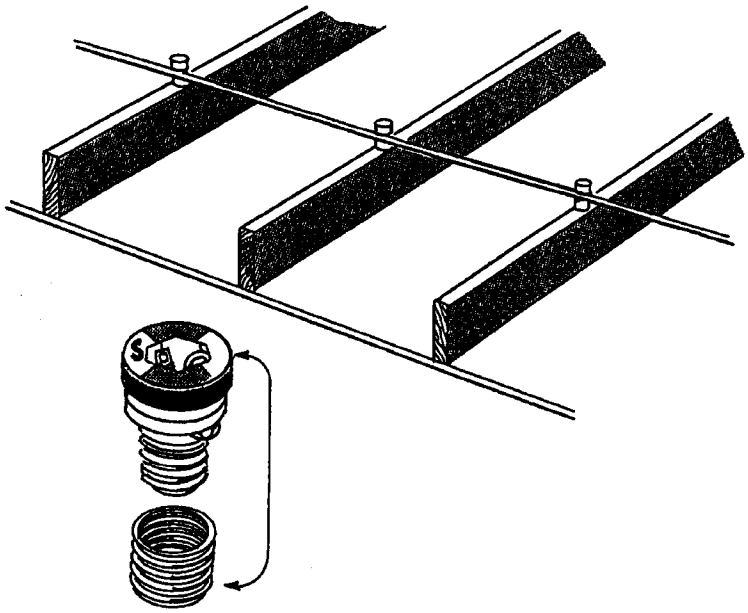

31. KNOB-AND-TUBE WIRING (continued)

- **Live Knob-and-Tube Wiring (continued)**
  - The following requirements apply to all attics insulated:
    - Insulation shall be noncombustible in accordance with Section 324-4 of the 1998 California Building Code.
    - Barriers and supports shall be noncombustible and shall not contain any electrical conductive material.
    - A "Warning Placard", stating that caution is required when entering insulated areas because of covered electrical wiring, shall be posted inside the attic near each openable entrance in a location where it will be observed by persons entering the attic.
    - A copy of the completed "Notice of Survey by Electrical Contractor" shall be posted near the "Warning Placard" at the primary entrance.

CAUTION!

There are concealed electrical wires which could cause electrocution!

31. KNOB-AND-TUBE WIRING (continued)

- **Abandoned and Disconnected Knob-and-Tube Wiring**
  - Prior to installation of ceiling insulation that encapsulates knob-and-tube wiring, the wiring shall be surveyed by an electrical contractor.
  - The "Notice of Survey by Electrical Contractor" shall specify that all knob-and-tube wiring located in all areas to be insulated is not live and has been abandoned and disconnected.
  - The electrical contractor, by severing wires in the attic or by other means, shall ensure that all abandoned and disconnected wiring cannot be energized by reconnecting abandoned feeder conductors to a service panel or other power source.

Notice of Survey by Electrical Contractor

This is a verification that the existing knob-and-tube wiring was surveyed at this address:

Number _____ Street _____ City _____ Zip _____

The existing wiring was found to be:

(A) ☐ In good condition with:
- ☐ No evidence of deterioration
- ☐ No improper connections or splices
- ☐ No evidence of improper overcurrent protection

OR

☐ In poor condition and was brought up to acceptable standards by:
- ☐ Installing tamperproof overcurrent protection with fuses
- ☐ Installing new service panel with breakers
- ☐ Other: _____

Therefore, the attic has been approved for the installation of ceiling insulation.

(B) ☐ In poor condition and not suitable to be brought up to acceptable standards because of:
- ☐ Evidence of deterioration
- ☐ Evidence of improper connections or splices
- ☐ Evidence of improper overcurrent protection
- ☐ Other: _____

☐ A copy of this certification will be filed with the local code-enforcement authority if so required.

☐ Prior to installation of new overcurrent devices, their effect on usage habits was explained to the occupant(s) and permission to install them was obtained.

Date _____ X _____ Contractor Signature

License Number _____ Firm Name _____

NOTICE TO CUSTOMER: This electrical survey is required before your ceiling can be insulated by the Program.

You are advised that if tamperproof overcurrent protection devices are installed to protect the wiring system, your electrical usage habits may require modification to avoid nuisance tripping of the fuses. Prior to installing overcurrent protection, the electrical contractor performing this survey is required to explain the difficulties you may experience after the devices are installed.

I CERTIFY THAT I HAVE READ AND UNDERSTAND THIS NOTICE:

Date _____ X _____ Customer Signature

K&T-97EP.XLS (4/1/97)

32. DUCT REPAIR AND SEALING

- **Duct leaks shall be sealed, disconnections shall be reconnected, and needed duct repairs shall be made in accordance with WIS Section 20, Duct Sealing Standards.**

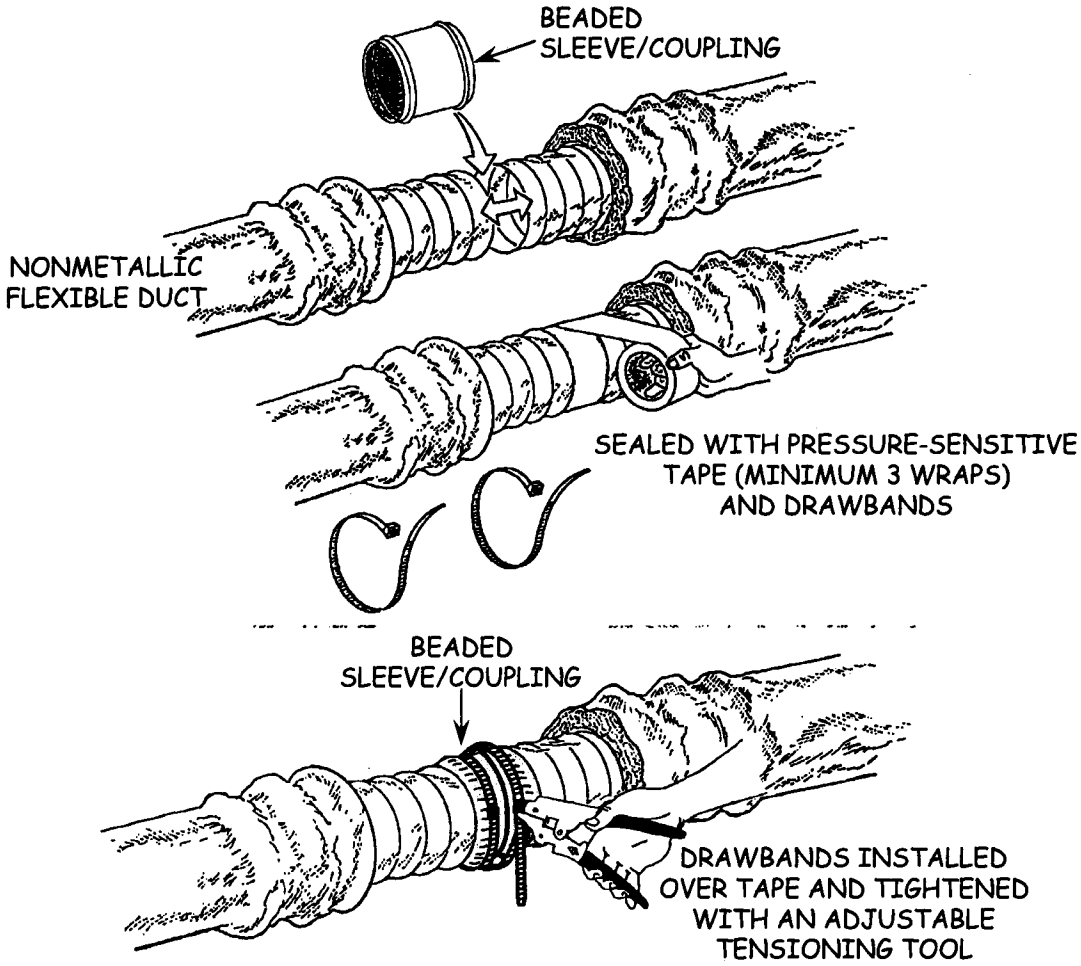

FLEXIBLE DUCT CORE SEALED TO FITTING WITH "181B-FX" TAPE

SEE SEPARATE "NONFEASIBILITY CRITERIA" WORD DOCUMENT FOR THE NONFEASIBILITY PAGE TO THIS SECTION

DUCT TESTING STANDARDS

1. EQUIPMENT

- **Instrumentation Minimum Specifications**
  - Pressure Measurements
    - Measurement systems shall have an accuracy of ± 0.2 Pa or 1% of reading, whichever is greater, and
    - Shall utilize static pressure probes specified by the measurement equipment manufacturer.
  - Duct Leakage Measurements
    - Duct leakage testing shall have an accuracy of ± 3% of measured flow, and
    - Shall utilize digital gauges specified by the measurement equipment manufacturer.
  - Airflow Measurements
    - Airflow testing shall have an accuracy of ± 7% of measured flow, and
    - Shall utilize digital gauges specified by the measurement equipment manufacturer.
- **Approved Leakage Measurement Equipment**
  - Equipment shall meet the Title 24 requirements specified in the 2005 Residential ACM Manual, Appendices RC and RE.
  - May include, but is not limited a Duct pressurization system, e.g., Duct Blaster™.

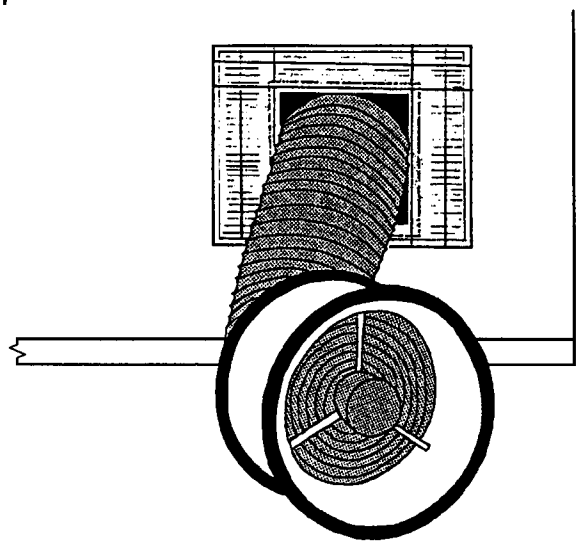

DUCTS PRESSURIZED WITH DUCT TESTER FAN

2. HVAC SYSTEM AIRFLOW (FAN FLOW)

- **HVAC system airflow (fan flow) shall be determined in accordance with Title 24 2005 Residential ACM Manual, Appendices RC and RE, utilizing one of the following methods[1]:**
  - Nominal System Airflow (Fan Flow) Estimate
  - Flow Grid Measurement
  - Plenum Pressure Matching Measurement
  - Flow Capture Hood
- **Nominal System Airflow (Fan Flow) Estimate**
  - Air conditioner cooling capacity shall be determined in tons, and furnace heating capacity (output) shall be determined in KBtuh, in accordance with ACM Residential Manual Appendix RC-2005, §RC.4.2, "System Fan Flow."
    - Cooling-only Systems: Allow 400 cfm per ton of cooling capacity.
    - Heating-only Systems:
      - Allow 21.7 cfm per KBtuh heating output.
      - For electric heat: [(Watts x 3.413 x 0.95) / 1,000] <u>or</u> [Kilowatts x 3.242] = KBtuh output.
    - Heating and AC Systems: Fan flow cfm shall be the greater of cooling capacity cfm <u>or</u> heating capacity cfm.
  - HVAC capacity (output) shall be determined in accordance with standard industry practice, such as the following (see Appendix -D-):
    - Air Conditioner Capacity (Tons)
      - The Preston Guide or Carrier Blue Book
      - Model Number Nomenclature
    - Heating System Capacity (KBtuh)
      - Btuh capacity (output) from Appliance Nameplate.

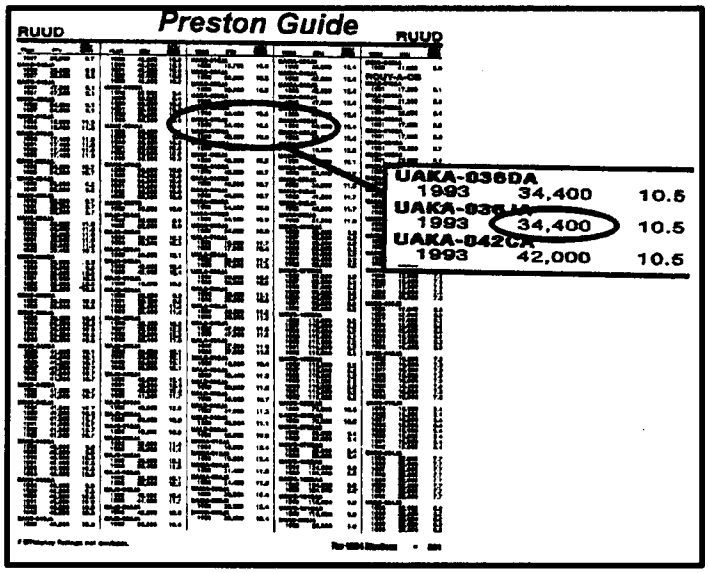

[1] See Conventional Home WIS Appendix -D-, "Methods for Estimating and Measuring Airflow".

© RHA • 10/20/05 (New)

2. HVAC SYSTEM AIRFLOW (FAN FLOW) (continued)

- **Flow Grid Measurement**
  - Equipment used for measurements shall meet the requirements specified in ACM Residential Manual Appendix RE-2005, §RE.3.1.3, "Flow Grid Measurement."
  - Measurements shall be in accordance with manufacturer's instructions, which take precedence, and Conventional WIS Appendix -D-.

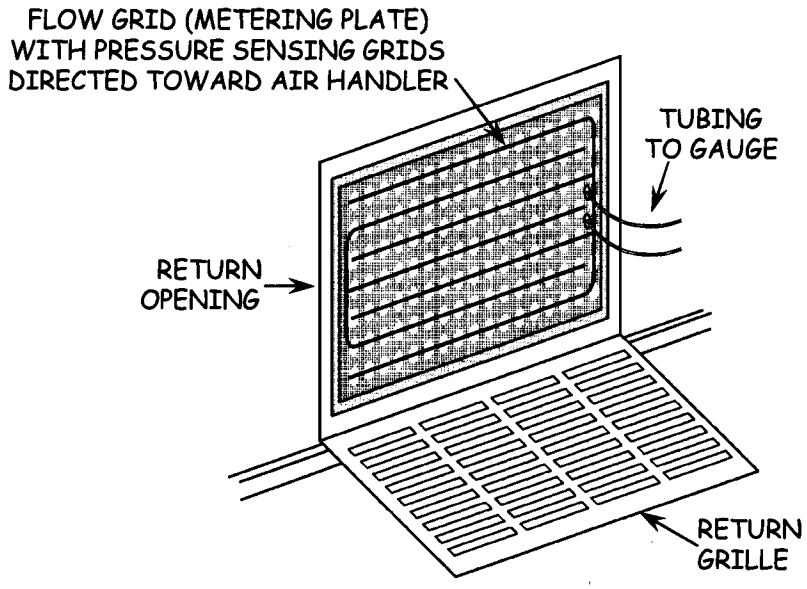

2. **HVAC SYSTEM AIRFLOW (FAN FLOW) (continued)**
   - **Plenum Pressure Matching Measurement (Duct Tester Used as a Powered Capture Hood)**
     - Equipment used for measurements shall meet the requirements specified in ACM Residential Manual Appendix RE-2005, §RE.3.1.1, "Plenum Pressure Matching Measurement."
     - Measurements shall be in accordance with manufacturer's instructions, which take precedence, and Conventional WIS Appendix -D-.

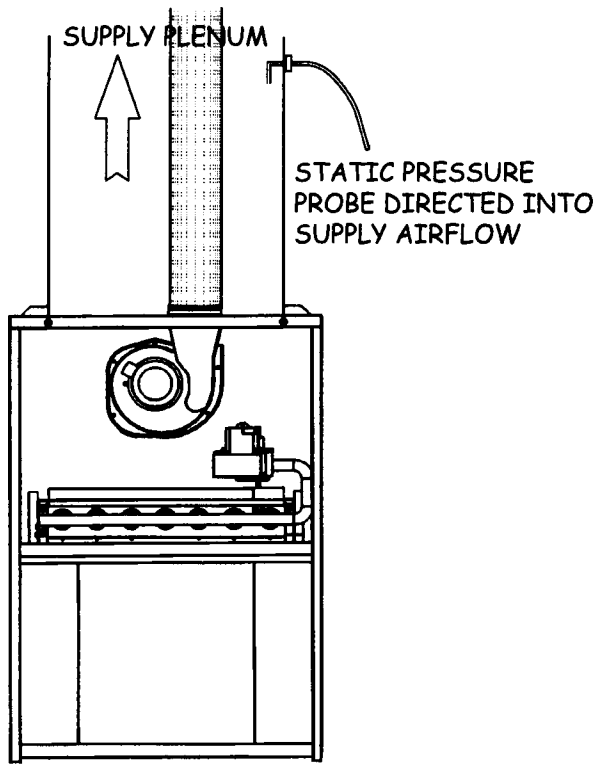

2. HVAC SYSTEM AIRFLOW (FAN FLOW) (continued)

- **Flow Capture Hood**
  - Equipment used for measurements shall meet the requirements specified in ACM Residential Manual Appendix RE-2005, §RE.3.1.2, "Flow Capture Hood Measurement."
  - Measurements shall be in accordance with manufacturer's instructions, which take precedence, and Conventional WIS Appendix -D-.

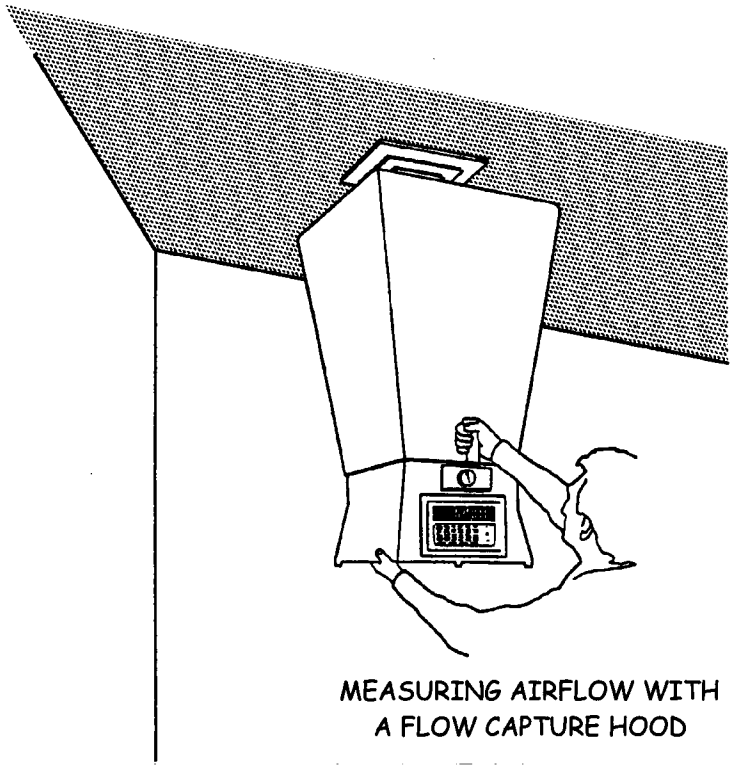

MEASURING AIRFLOW WITH
A FLOW CAPTURE HOOD

3. TEST CONDITIONS FOR ALL DUCT LEAKAGE TESTS

- **Equipment Operation**
  - The HVAC system must be operated briefly to determine that the FAU functions properly prior to performing any duct tests.
  - Duct Testing shall <u>not</u> be performed if:
    - The FAU is inoperable, or
    - A hazardous conditions exists (e.g., burner/flame abnormality, high CO, cracked heat exchanger) that requires service/adjustment or repair/replacement per NGAT standards/policy.
- **Air filters**
  - Filter(s) shall be removed from the duct system.
  - Opening (slots) for slide-in filters in the plenum shall be sealed (e.g., with temporary duct tape).
- **Ventilation Air Intakes**
  - Intakes connected to the duct system (e.g., makeup air, economizer venting damper, etc.) shall be temporarily sealed.
- **All fan-equipped appliances shall be turned off, such as:**
  - HVAC equipment: FAU and room air conditioners.
  - Exhaust devices: fans and clothes dryer vented outdoors.
- **Duct system terminals shall be blocked as applicable.**
  - One return register or air handler access shall remain unblocked for installation of duct tester.
  - All other supply registers and return grilles shall be blocked/sealed per Item 4.

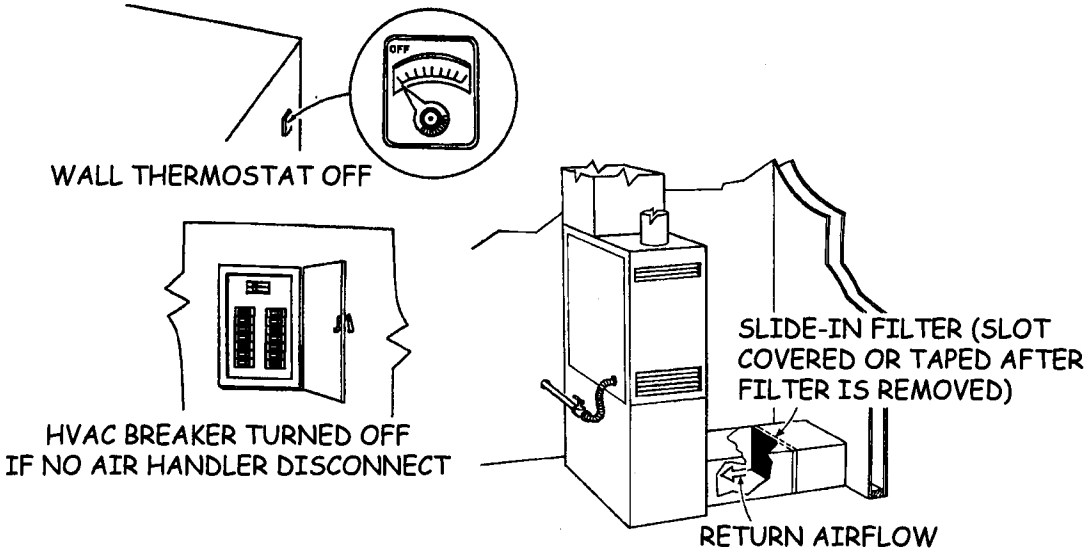

4. BLOCKING SUPPLY AND RETURN DUCT TERMINATIONS

- **All Blocking Methods**
  - Terminations must be temporarily blocked/sealed to achieve a complete seal during duct pressurization testing.
  - Leaky plenum slots for slide-in filters and air intakes connected to the duct system (e.g., makeup air) shall also be sealed.
  - Blocking/sealing methods and materials must not damage home finishes.
  - The same blocking/sealing method shall be used for all tests.
- **External Blocking Method**
  - Face Seal Register/Grille
    - The face of the supply register or return grille is covered with a temporary barrier material (register-sealing film, wide masking tape, etc.).
    - Barrier material is restricted to the face of the register/grille and must cover and seal all openings.
  - Lap Seal Register/Grille
    - The register/grille is covered with temporary barrier material that laps onto the surrounding surface.
    - This method may <u>not</u> be used where acoustical texturing is present and where barrier material is likely to peel off paint or otherwise damage the surface.
  - Register/grille must be completely sealed.

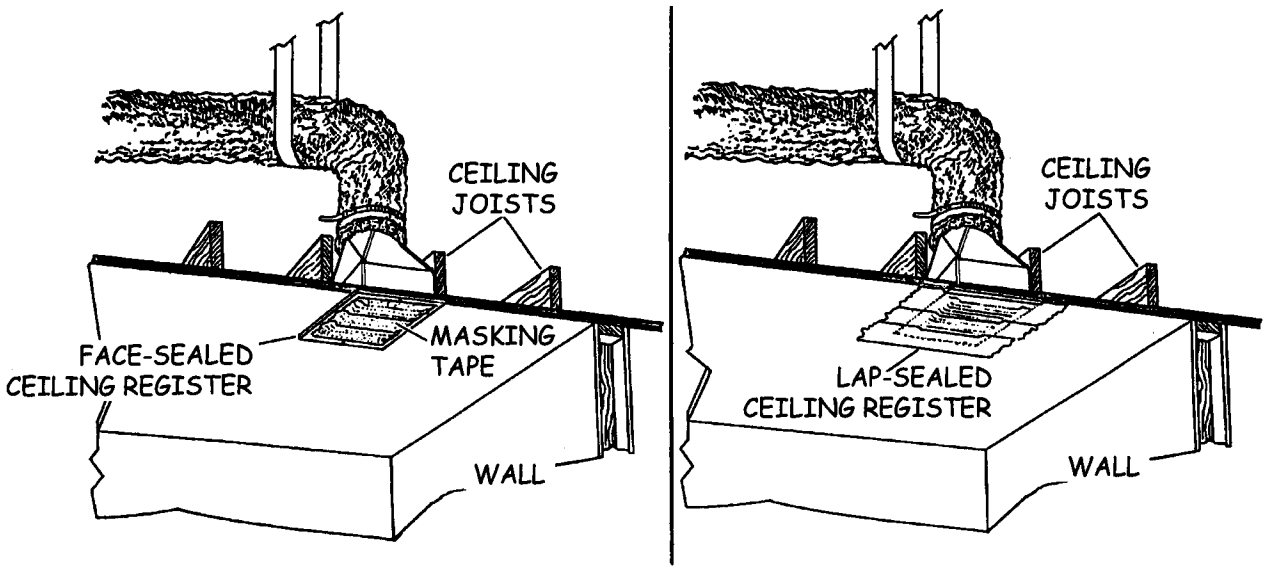

4. **BLOCKING SUPPLY AND RETURN DUCT TERMINATIONS (continued)**
   - **Cover Pan Method**
     - The supply/return opening is covered with a sealed pan-shaped device held firmly in place.
     - The edge/flange of the cover pan must be gasketed to achieve a complete seal.
     - This method shall not be used where acoustical texturing is present.
   - **Internal Blocking Method:**
     - The boot is internally blocked with a temporary plug or dam (e.g., a tight-fitting block of dense foam or duct board).
     - Plug must seal the boot completely.
     - Gaps between the boot and the structure shall be sealed/caulked if the internal blocking method is used.

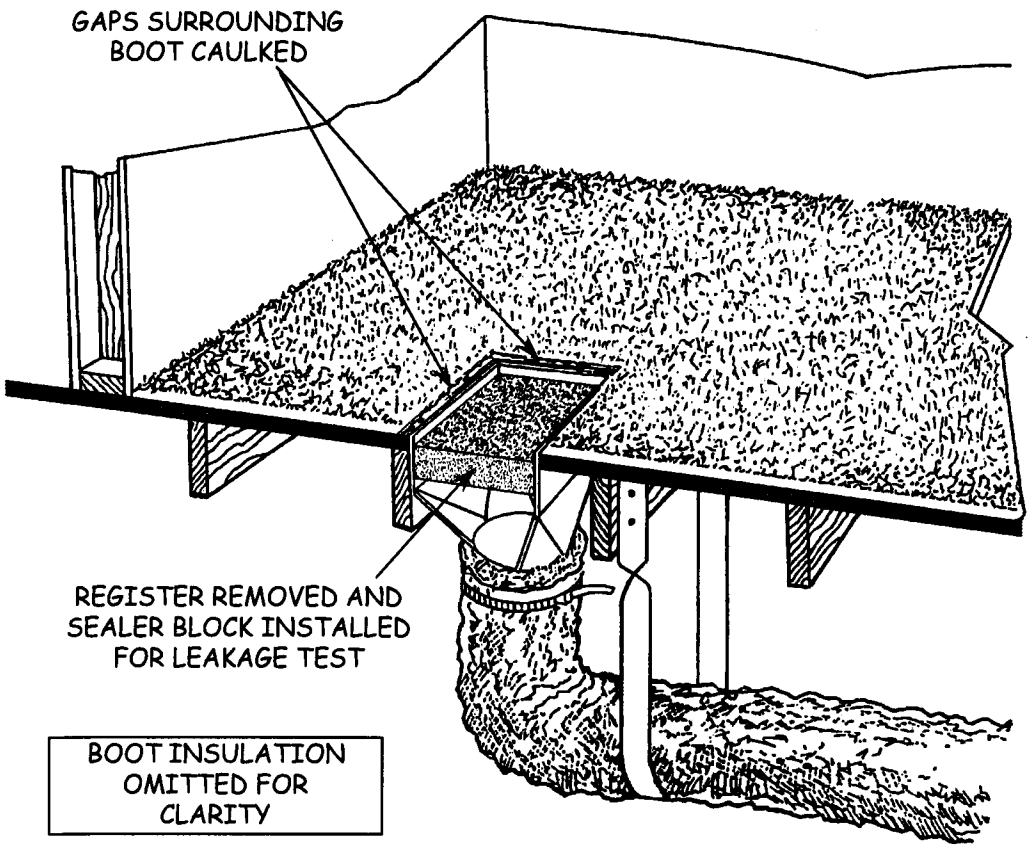

5. DUCT TESTER INSTALLATION

- **Test equipment shall be set up, calibrated, and operated in accordance with manufacturer's instructions.**
- **General Guidelines for Duct Tester Fan Installation**
  - The duct tester fan housing or remote connector assembly (e.g., transition piece) is attached to the HVAC system.
  - The remote connector is attached to the return grille that is largest and closest to the air handler (minimum 1'x1' grille required).
  - On multi-return systems (e.g., more than one central return, or a return in every room), and in other situations when connection to a return grill is not feasible, the fan or remote connector is attached to the air handler blower access opening.
  - The fan/connector is secured and sealed completely with temporary tape/film.
  - The duct-pressure sampling hose/probe is installed from the digital pressure gauge to inside the taped register nearest the supply plenum.
  - The Fan Pressure hose is installed from the digital pressure gauge to the duct tester fan pressure tap.

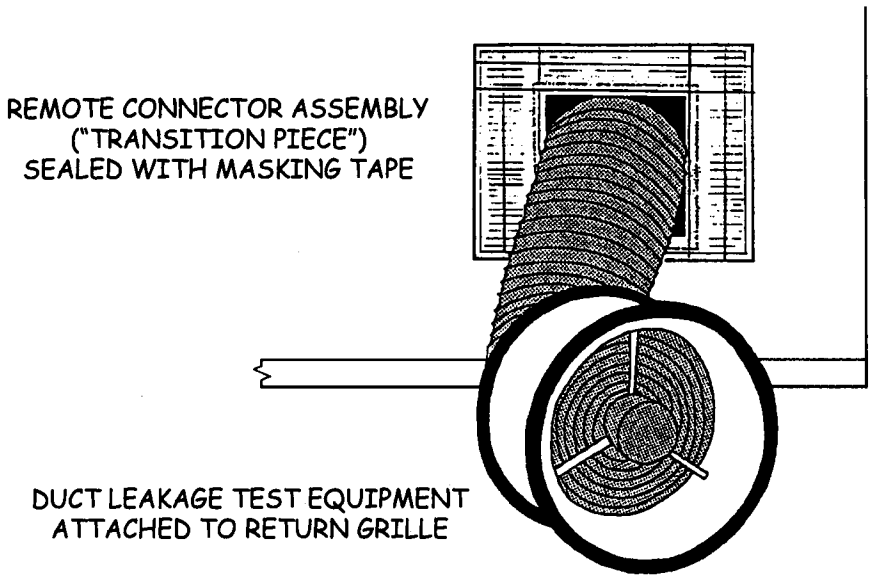

6. TOTAL DUCT LEAKAGE TEST

- **Tests shall be performed in accordance with test equipment manufacturer's instructions.**
- **Test Conditions and Preparation**
  - Test conditions shall be established per Item 3.
  - Supply and return duct terminations shall be blocked per Item 4.
  - Duct tester shall be set per Item 5.
- **Total Duct Leakage Test**
  - To prevent depressurization of the conditioned space by the duct tester fan, an entry door or large window shall be opened.
  - To prevent pressurization of an unconditioned space containing ducts, the space must communicate with outdoors (e.g., by opening vents, access cover/door, etc., as needed).
  - People and objects must be kept away from the front of, and at least one foot to the side of, the duct tester fan inlet during tests.
  - Digital pressure gauge Mode shall be set for one-second averaging, or as recommended by manufacturer.
  - Digital pressure gauge shall be set on high Range, or as recommended by manufacturer.

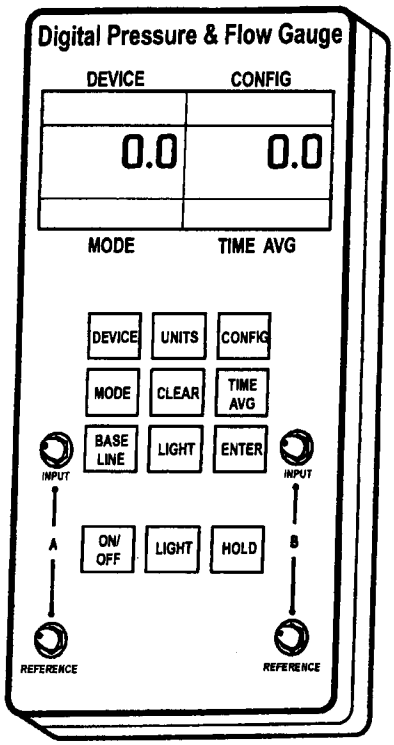

DIGITAL GAUGE FOR MEASURING PRESSURE AND AIRFLOW

6. **TOTAL DUCT LEAKAGE TEST (continued)**
   - **Pressurization test shall be performed per manufacturer's instructions, using flow control device (e.g., "Flow Ring") as needed.**
     - Duct Tester fan shall be adjusted to pressurize ducts to 25 Pa.
     - Flow control device shall be changed as needed to keep Fan Pressure within an acceptable range, as indicated in Table 10-1 for the Minneapolis Duct Blaster™.
   - **Total Duct Leakage**
     - Total Duct Leakage CFM_{25} shall be determined.
     - For digital pressure gauges that do not automatically convert fan pressure to fan flow, manufacturer's conversion tables and procedures shall be utilized to calculate Total Duct Leakage in cfm.
     - Total Duct Leakage in cfm shall be divided by Forced Air System Airflow in cfm and converted to a percentage:

       [Total Leakage ÷ System Airflow] x 100 = % of System Airflow
     - Target Total Duct Leakage is <15% of System Airflow, or as specified in the program P&P (see Item 7).
   - **Very Leaky Systems**
     - When a Duct Pressure of 25 Pa cannot be achieved, and the digital gauge does not automatically estimate cfm at 25 Pa, manufacturer's instructions shall be followed.

TABLE 10-1: FAN FLOW CONTROL

Fan Configuration	Flow Range in CFM
Open Fan (no Flow Ring)	600 to 1,500
Ring 1	225 to 800
Ring 2 (smaller opening)	90 to 300
Ring 3 (smallest opening)	20 to 125

7. DUCT SEALING PROTOCOL

- **Standards**
  - Duct repairs and sealing shall be performed in accordance with WIS Section 20, Duct Sealing Standards.
- **Start Criteria**
  - Duct repair and sealing work may begin only if the *Initial* Total Duct Leakage satisfies the Start Criteria in the Program P&P.
- **Stop Criteria**
  - When the LIEE Duct Sealing maximum leakage criteria must be met, one of the following LIEE P&P requirements shall be satisfied:
    - Target Leakage (stop) criteria, <u>or</u>
    - Default Stop criteria—all accessible leaks sealed.
  - When Title 24 criteria maximum leakage must be met:
    - Target Leakage must be met as shown in Table 10-2.
    - Measurement method (C) shall be used only when Target Leakage cannot be met using method (A) or (B).
- **Required data shall be recorded on the data form, including:**
  - Total Duct Leakage (or Leakage to Outside) CFM_{25} from the *Initial* test, performed before starting duct repair and sealing work.
  - Total Duct Leakage (or Leakage to Outside) CFM_{25} from the *Final* test performed after completing duct repair and sealing work.

TABLE 10-2: TITLE 24 DUCT SEALING TARGET LEAKAGE

MEASUREMENT METHOD	TARGET LEAKAGE	T-24 PROCEDURE[1]
(A) Total Duct Leakage	<15% of System Fan Flow	RC.4.3.1
(B) Duct Leakage Reduction	>60% Leakage Reduction[2]	RC.4.3.4, RC.4.3.6, and RC.4.3.7
(C) Prescriptive Default	Target Not Met but All Accessible Ducts are Sealed[3]	RC.4.3.5, RC.4.3.6, and RC.4.3.7

[1]Title 24 ACM Residential Manual Appendix RC-2005

[2]Final duct leakage compared to Initial duct leakage, with a smoke test to confirm that all accessible leaks have been sealed.

[3]When leakage target cannot be met, all accessible leaks must be sealed, as confirmed by a smoke test.

8. WRAP-UP PROCEDURE

- **Following completion of duct testing, the HVAC system, appliances and the home shall be returned to original condition.**
- **Temporary sealing removed:**
  - All temporary sealing and blocking materials (register-sealing film, temporary tape, foam plugs, etc.) shall be removed.
  - Ventilation air intakes (see Item 3) shall be restored to normal.
- **Air filter(s) reinstalled:**
  - Filters removed for testing shall be reinstalled.
  - Dirty filters shall be cleaned before reinstallation.
- **Appliances and furnishings restored:**
  - Wall thermostat, water heater control, HVAC/air handler power, windows, doors, fans, room air conditioners, etc. returned to pre-test settings.
  - Home furnishings returned to original locations.
  - All test equipment, tools, supplies, and trash removed from the home.

THERMOSTAT RESET

REGISTER SEALS REMOVED

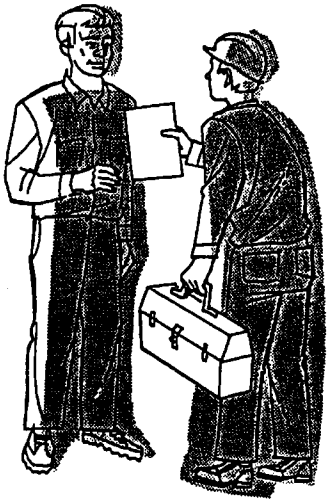

COMMUNICATION WITH CUSTOMER

SEE SEPARATE "NONFEASIBILITY CRITERIA" WORD DOCUMENT FOR THE NONFEASIBILITY PAGE TO THIS SECTION

CALIFORNIA CONVENTIONAL HOME WEATHERIZATION INSTALLATION STANDARDS

for use in

California's Low Income Energy Efficiency Programs

administered by

San Diego Gas and Electric Company
Southern California Edison
Southern California Gas Company
Pacific Gas and Electric Company

Part 1b (Conventional-*edits accepted*)

OCTOBER 20, 2005 –*REVISIONS*

NATURAL GAS CENTRAL FORCED AIR HEATING SYSTEMS REPAIR AND REPLACEMENT STANDARDS

PART 1: MATERIALS

1. APPROVED MATERIALS

- **All materials shall be in conformance with the CBC and CMC.**
- **Furnaces**
  - All units and components shall be UL listed and AGA certified.
  - All units shall be ENERGY STAR® qualified.
- **Split Systems**
  - Furnace: Minimum AFUE rating of 78%.
  - Air Conditioner, if replaced in conjunction with furnace:
    - Minimum EER of 11.5 and SEER of 13.0, with a Thermostatic Expansion Valve (TXV).
    - EER shall be determined by the coil match as listed in the current ARI Directory.
- **Package Units (Dual Packs):**
  - Furnace: Minimum AFUE rating of 78%.
  - Air Conditioner: Minimum EER of 11.5 and SEER of 13.0.

LISTED

EPA DOE

1. APPROVED MATERIALS (continued)

- **Metal Flue and Vent Pipes**
  - All metal flue and vent pipes, vent connectors and components shall be UL listed.
  - Gas flue and vent pipe shall be Type B or BW.
- **Nonmetallic Combustion Air and Vent Pipes**
  - Pipes and fittings shall conform to ASTM D 1785 and D 2665.
  - Pipe cement and primer shall conform to ASTM D 2564.
- **Gas Pipes and Valves**
  - Gas values shall be listed and AGA certified.
  - Gas flexible connectors shall be listed epoxy-coated or stainless steel units.
  - Pilot tubing shall be aluminum (copper not allowed).
  - Fuel-gas piping:
    - Shall be selected, sized and installed per 2001 CMC Chapter 13.
    - Copper gas lines not allowed.
- **Ducts and Sealants**
  - Materials shall be in conformance with the Section 20, Duct Sealing Standards.

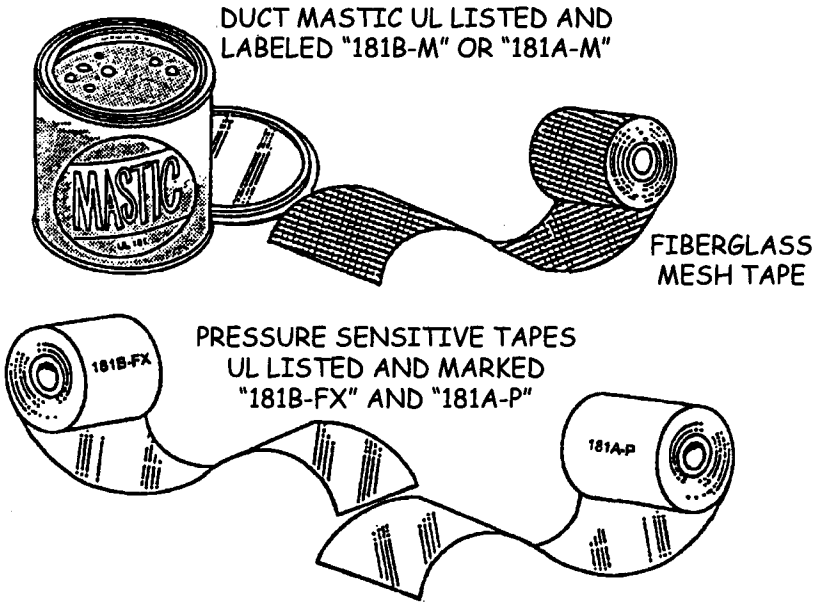

1. APPROVED MATERIALS (continued)

- **Programmable Wall Thermostat**
  - ENERGY STAR® qualified.
  - System powered, not battery powered, on 24 volt systems.
  - Digital with anti-short-cycle feature.
  - Minimum setback capability of 10°F.
  - At least two setback periods per 24 hour day, with change cycle increments being no greater than 30 minutes.
  - Manual override and standard alkaline battery backup or other program saving backup system.
  - Positive on/off switch that is easily accessible.
  - Compatible with the HVAC equipment.
- **Standard Wall Thermostat**
  - Alternative when customer refuses programmable thermostat.
  - Digital with built in anti-short-cycle feature.
  - Conforms with manufacturer's instructions.
  - Compatible with the HVAC equipment.
  - Includes a positive on/off switch.

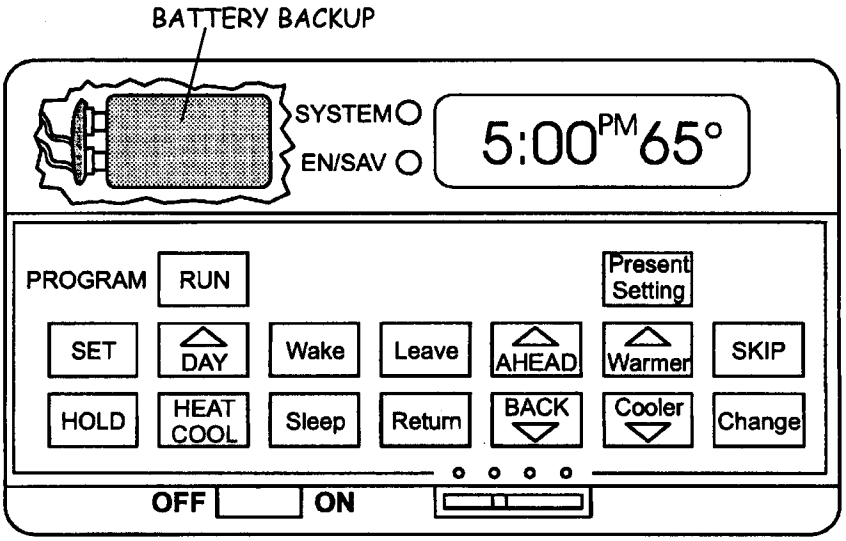

DIGITAL PROGRAMMABLE THERMOSTAT
WITH ON/OFF SWITCH

1. APPROVED MATERIALS (continued)

- **Central Heating and Air Conditioning Air Filters**
  - Shall be washable.
  - Shall be UL listed Class 2 filter material.
  - Shall conform to ARI Standard 680 and UL-900 or UL-1096.
  - "Hog Hair" Type and Other Bonded Fiber
    - 1" thickness shall be used in central HVAC systems.
  - Foam
    - 1/4" single layer foam, 20 to 30 pores per inch (ppi).
    - Foam shall be installed only when bonded fiber is <u>not</u> feasible or is prohibited by the appliance manufacturer.
  - Other Materials
    - "Sock" type foam and other specialty materials may be installed where required by appliance manufacturer.

2. WARRANTY

- **HVAC Unit Installations**
  - Parts and labor shall be covered by a minimum one (1) year written parts and labor warranty.
  - Compressor warranty shall extend to five (5) years.
  - All written warranty information and manufacture's operating and maintenance instructions shall be supplied to the customer.
- **Wall Thermostats**
  - Minimum one-year manufacturer's warranty.
  - Minimum one-year parts and labor contractor's warranty.

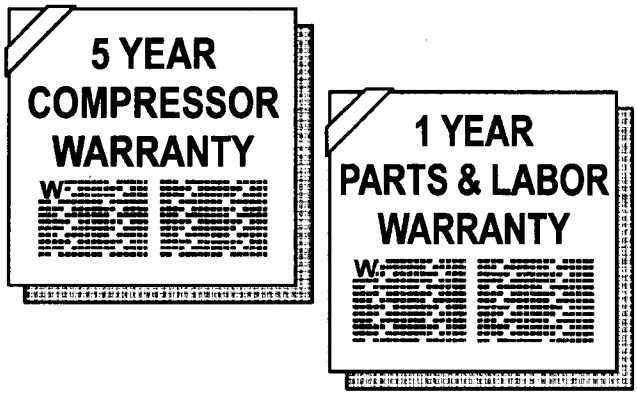

PART 2: NEW FURNACE AND COMBINED FURNACE AND AIR CONDITIONER INSTALLATION

3. GENERAL REQUIREMENTS

- **A permit for the installation shall be obtained from and finalized by the local jurisdiction.**
- **Installation shall be in compliance with:**
  - Manufacturer's instructions and specifications.
  - Currently adopted California Electrical Code (CEC).
  - Currently adopted California Mechanical Code (CMC).
  - Local building code.
- **Lead-safe practices shall be employed when working with pre-1979 painted materials per state codes T8 Section 1532.1 and T17 Section 36000, et seq.**
- **Air Distribution System**
  - Distribution system shall be in conformance with HVAC manufacturer's specifications.
  - Retrofit Units Utilizing Existing Duct System
  - Duct system shall be examined for leaks and brought into conformance with Title 24 requirements, in accordance with the program Policy and Procedures.
  - Testing shall be performed in accordance with WIS Section 10, Duct Testing Standards, and repairs and sealing shall be made in accordance with WIS Section 20, Duct Sealing Standards.
  - The supply and return plenums shall be securely attached to the air handler.
  - The supply and return ductwork shall be securely attached to the respective plenums.
  - New ductwork shall be installed in conformance with manufacturer's instructions.

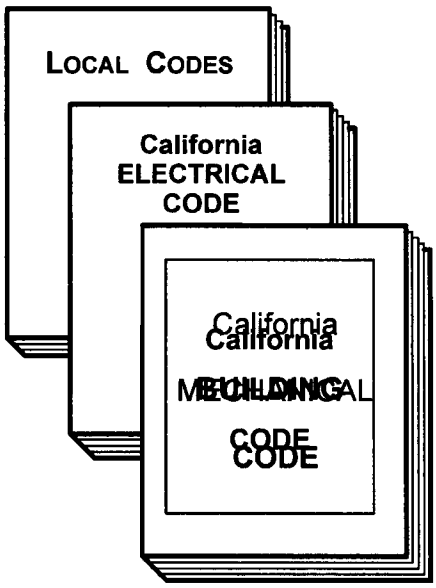

PART 3: NEW FURNACE INSTALLATION

4. LOCATION

- **FAU Enclosure**
  - Enclosure shall be the proper size for required clearances and combustion air venting.
  - Access shall be provided per Item 13.
  - Enclosure shall provide adequate service space for:
    - A 120V receptacle, and
    - An appliance line valve.

5. SYSTEM DESIGN AND PERFORMANCE

- **All Installations**
  - Unit shall be properly sized in accordance with Title 24 or local code, whichever is more stringent.
  - Capacity of the new system should be equal to or smaller than the existing system.
- **Installations Utilizing Existing Ducts**
  - New FAU shall be compatible with existing duct system.

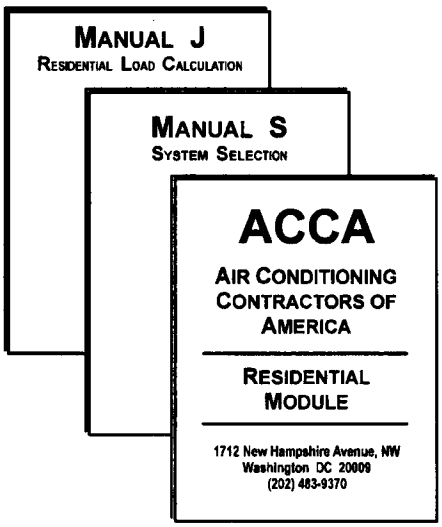

6. NEW FURNACE INSTALLATION

- **Appliance Venting**
  - Appliance venting shall be in conformance with state and local codes, manufacturer's installation instructions and venting tables.
  - When an existing furnace that shares a common vent with another appliance is replaced with a new unit, contractor shall ensure that both appliances are properly vented.
- **Plumbing/Piping**
  - All pipes, valves, fittings, flexible connectors, etc. shall comply with local codes, CMC and CBC.
  - Only new parts shall be installed; used parts not allowed.
  - Shutoff valve shall be within 3' of the appliance and in the same room or space where the appliance is located.

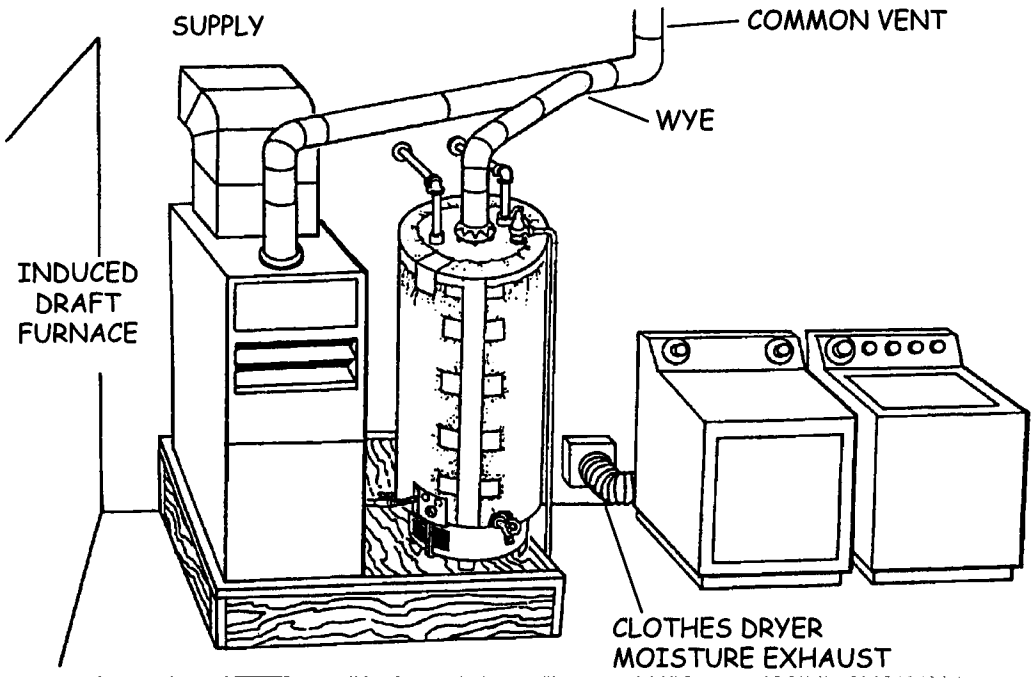

6. NEW FURNACE INSTALLATION (continued)

- **Wall Repairs**
  - Wall repairs shall match plane of adjacent material.
  - Repairs shall match texture of, and blend with, surrounding surfaces.
- **Floor Repairs**
  - Abandoned floor openings shall be closed in a workmanlike manner:
    - Framed on all four sides.
    - Finished with minimum 3/4" CCX plywood or better material.
  - Floor shall be surfaced in conformance with the customer's wishes:
    - Flush with surrounding flooring material, or
    - Recessed to accommodate future installation of floor covering material.
  - All construction debris shall be removed from the crawl space and the premises.

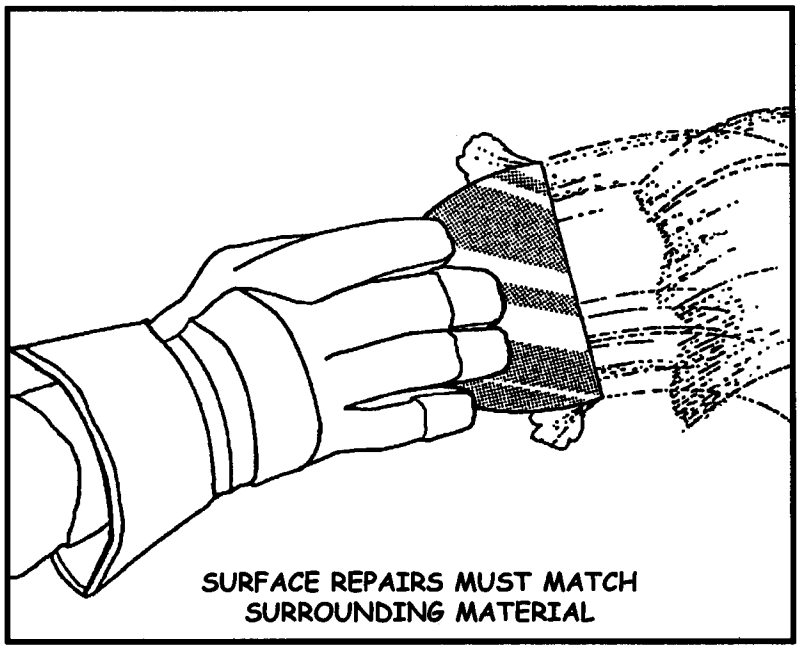

7. COMBUSTION AIR

- **All Forced Air Units**
  - Combustion air shall be supplied in conformance with manufacturer's instructions and local code (see WIS Appendix -A- and CMC Chapter 7).
  - Existing combustion air vents shall be free of obstructions (e.g., over-blown ceiling insulation, duct insulation, etc.).
  - Return air shall be isolated from combustion air.
- **Open Combustion Furnaces Inside a Building**
  - Combustion air shall be obtained entirely from either outdoors or inside the building.

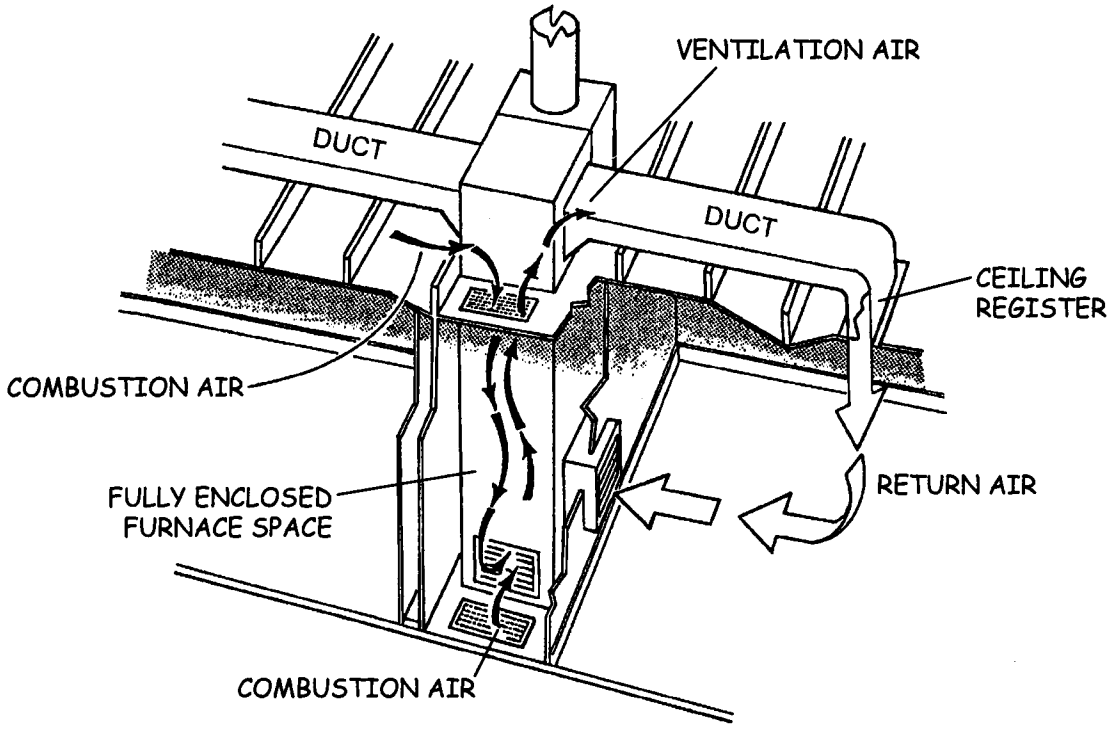

8. FAU, PLENUMS, AND DUCTS

- **Return Air Plenum shall be free of leaks which:**
  - Affect combustion air.
  - Draw in outside air (except economizer units).
- **Platform Returns**
  - Platform cavity shall be sealed to prevent infiltration from unconditioned space and furnace enclosure.
  - Platform bypasses shall be blocked/sealed with a liner of fiberglass duct board or sheet metal.
  - Uninsulated platforms shall be insulated by:
    - Filling stud cavities inside the plenum with flexible insulation, when lining/sealing with sheet metal, <u>or</u>
    - Installing fiberglass duct board to both line/seal and insulate the plenum.
  - Platform return accessed by swinging appliance enclosure door:
    - Door-mounted grille shall not interfere with proper closure of door.
    - Return shall be isolated from furnace enclosure (e.g., with weatherstripping).
- **Cabinet and Plenum**
  - Components shall be mechanically attached and sealed around the perimeter (e.g., cabinet-to-platform, cabinet-to-plenum).
  - Wiring and plumbing penetrations into the return air chamber shall be sealed with cork tape.

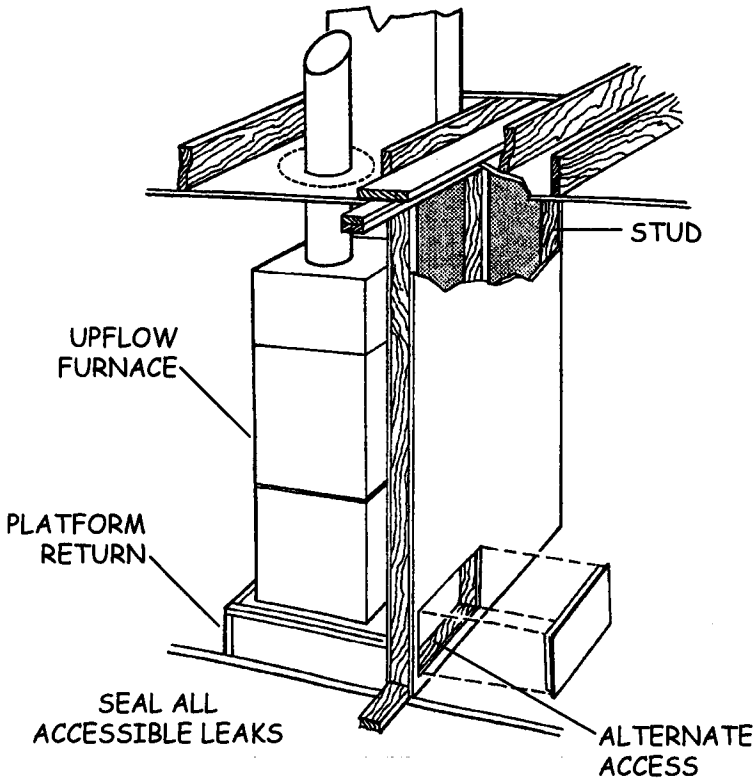

8. FAU, PLENUMS, AND DUCTS (continued)

- **Ducts and Sealants**
  - Duct repairs and sealing shall be made in accordance with WIS Section 20, Duct Sealing Standards.

9. FLUE AND VENT SYSTEMS

- **All Furnaces**
  - New vent/flue system shall be installed and secured in conformance with manufacturer's instructions and local code.
  - Reference Standard: CMC Chapter 8.

10. ELECTRICAL WIRING

- **All wiring shall be in conformance with local code.**
- **Air conditioning equipment shall be installed as prescribed in Part 5.**

11. WALL THERMOSTATS

- **When required, a programmable thermostat shall be installed as prescribed in Part 6.**

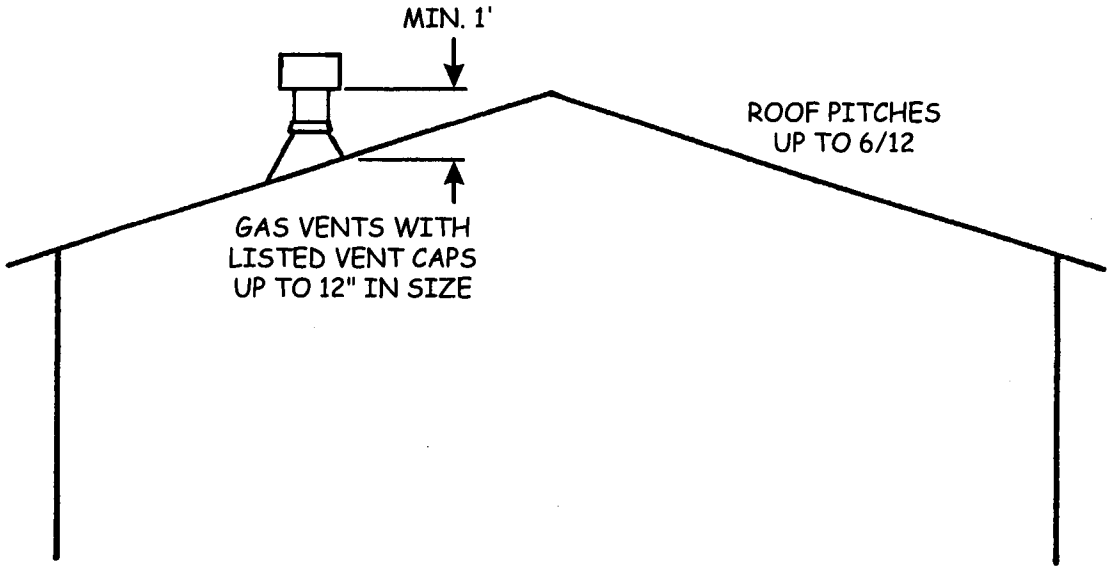

12. GAS LINES, FITTINGS AND VALVES

- **All Installations**
  - All gas piping (e.g., risers, flexible connectors, fittings and valves) shall be installed in conformance with manufacturer's instructions and local code.
    - Gas shut-off valve shall be in good condition and in conformance with Item 1.
    - Gas flexible connector shall be new (existing shall not be reused).
  - All new and affected lines and components shall be checked for gas leaks by a method approved by the local jurisdiction, such as one of the following:
    - Commercial leak detection liquid.
    - Electronic leak detector.
    - Pressure test of the line.

ELECTRONIC LEAK DETECTOR

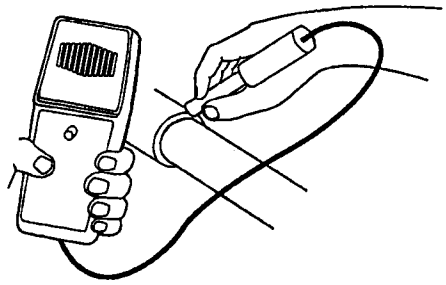

LIQUID LEAK DETECTION METHOD

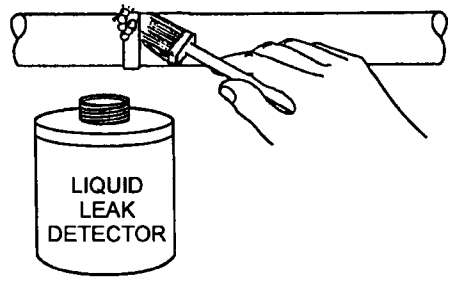

GAS LINE FITTINGS, VALVES, AND CONNECTORS CHECKED FOR GAS LEAKS

13. ACCESS AND SERVICE SPACE

- **All installations**
  - Access and service space shall be provided in accordance with local code (reference standard: 2001 CMC, Section 305).
- **Equipment in Enclosures**
  - Access door shall be:
    - At least 24" wide if installed.
    - Wide enough to remove the appliance.
    - High enough to accommodate removal of the appliance.
- **Equipment Under Floors and on Roofs**
  - Access shall be provided in accordance with local code.

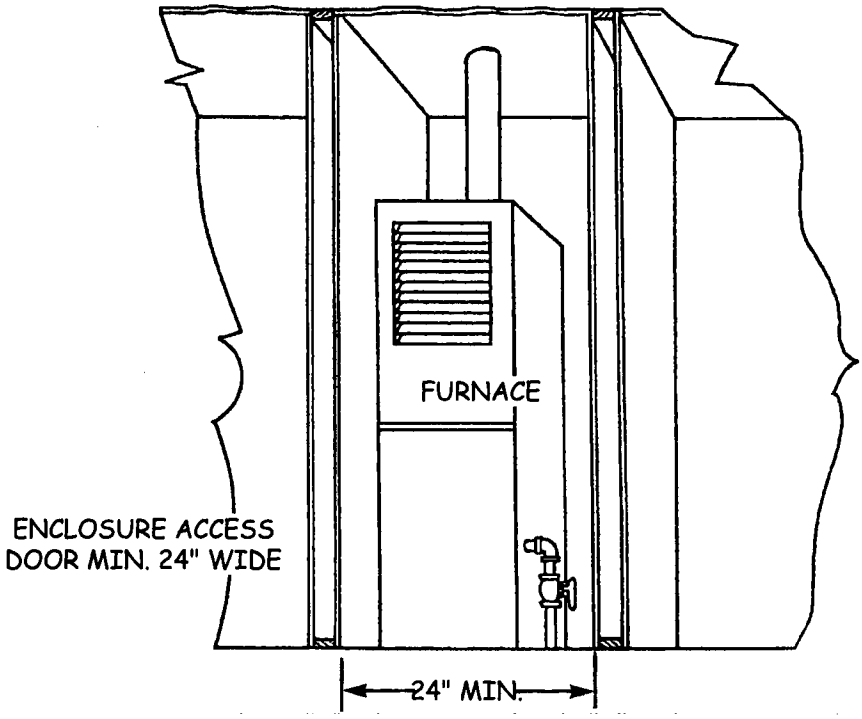

13. ACCESS AND SERVICE SPACE (continued)

- **Equipment in Attics**
  - Access opening shall be large enough to accommodate removal of the appliance, but no smaller than 30" by 22".
  - An unobstructed passageway shall be provided which:
    - is large enough to accommodate removal of the appliance, but no smaller than 30" wide and 30" high.
    - Is no more than 20' in length (from access opening to the equipment).
    - has continuous solid flooring not less than 24" wide.
  - A level service space shall be provided at the front or service side of the equipment which is at least 30" wide and 30" deep.
- **Illumination for Attic Installation**
  - Permanent switch-controlled lighting shall be installed.
  - Switch shall be located at the access/entrance and readily accessible.
  - Lighting shall provide sufficient illumination to safely approach the equipment and perform the task for which access is provided.

14. CENTRAL AIR CONDITIONERS COMBINED WITH FURNACE

- **Equipment shall be installed as prescribed in Part 5.**

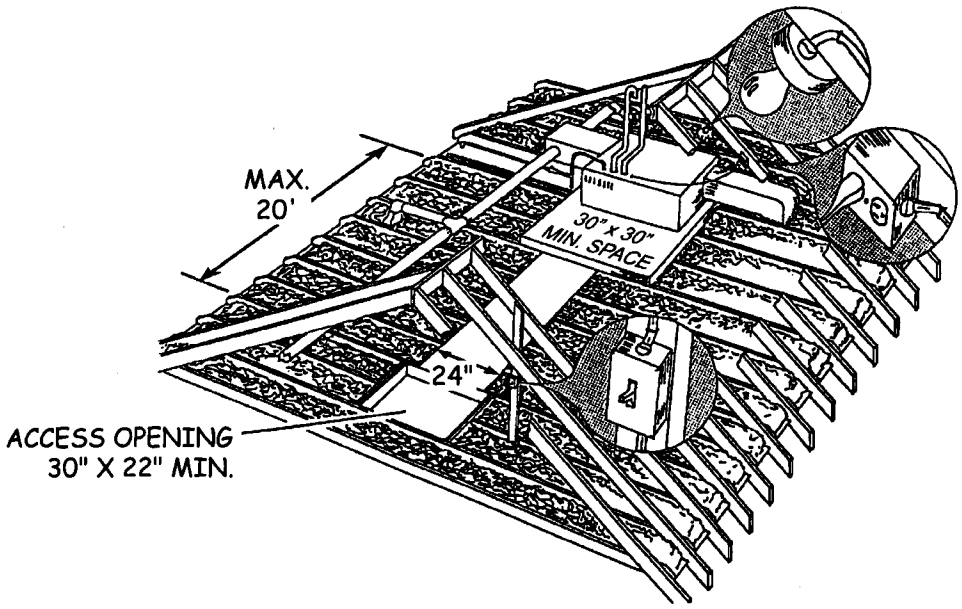

PART 4: FURNACE REPAIRS

15. PRELIMINARY EXAMINATION

- **The furnace shall be checked for the presence of defects, such as the following:**
  - Gas leaks at valves, fittings, joints, or flexible gas connectors.
  - Presence of copper gas line or butt-soldered joints.
  - Heat exchanger defects (e.g., cracks, holes, deterioration).
  - Excessive rust in the draft hood or heat exchanger.
  - Flue/vent system defects, such as:
    - Disconnections, leaks, obstructions, etc.
    - Defective/missing cap.
    - Misaligned, defective or multiple draft hoods.
    - Inadequate clearance from combustibles.
    - Improper termination.
    - Single-wall pipe used where double-wall is required (e.g., extending beyond ceiling.
  - Burner defects, such as:
    - Excessive soot or rust.
    - Dirty or improperly adjusted.
    - Flame impingement and/or abnormal flame.
    - Delayed or rollout ignition.
    - Incorrect orifice.
    - Over- or under-fired.

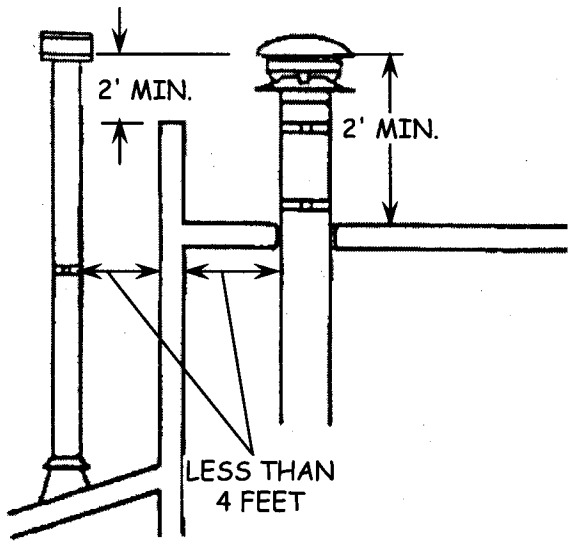

VENT PIPES LOCATED WITHIN 4' OF A WALL

15. PRELIMINARY EXAMINATION (continued)

- **The furnace shall be checked for the presence of defects, such as the following:**
  - Improper position of thermocouple/pilot generator, pilot or flame.
  - Inadequate/improper combustion air venting.
  - Controls
    - Electrical disconnection or defect.
    - Improper adjustment.
  - Distribution System
    - Return leaks that could draw in combustion products or other pollutants.
    - Furnace-to-floor/plenum gaps/leaks.
    - Dirty, defective, or missing furnace filter.
  - Blower Chamber
    - Need for cleaning or lubrication of blower.
    - Loose or unsafe wiring.
  - Evaporator Coil Box
    - Dirty or damaged evaporator coil.
    - Air leaks at plumbing or wiring penetrations.
  - Heating unit integrity:
    - Loose or hazardous wiring.
    - Loose or missing components.
    - Improper alteration of the heating unit.

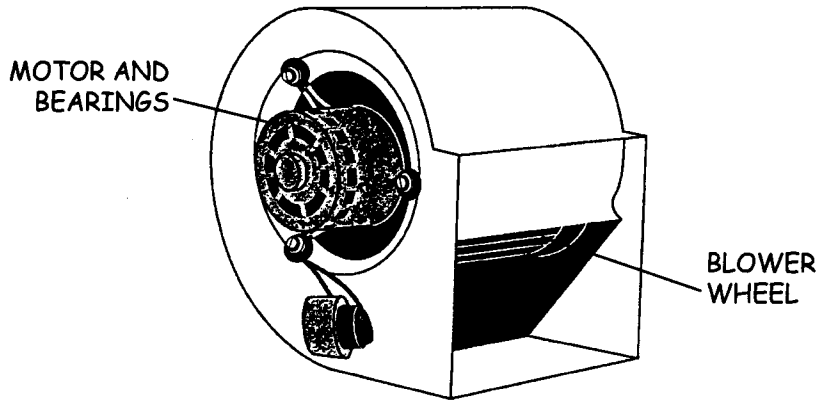

16. DUCT TESTING AND SEALING

- **Duct system shall be examined for leaks and disconnections and brought into conformance with LIEE requirements, in accordance with the program Policy and Procedures.**
- **Testing shall be performed in accordance with WIS Section 10, Duct Testing Standards, and repairs and sealing shall be made in accordance with WIS Section 20, Duct Sealing Standards.**

17. HVAC UNIT AIR FILTERS

- **All filters shall be properly installed and clean.**
- **Unframed filters shall be properly supported to prevent being drawn toward the air handler, as prescribed in Part 7.**

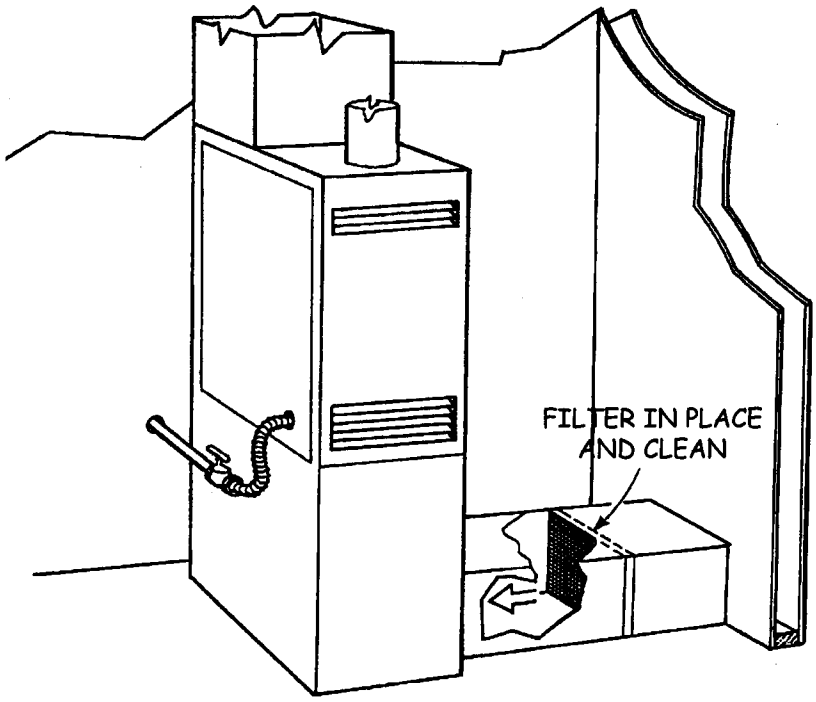

18. HEATING UNIT INTEGRITY

- **Loose items shall be tightened (e.g., screws, bolds, panels, etc.).**
- **Missing/damaged components critical to proper operation shall be replaced/repaired (e.g., access doors, roll-out shield, etc.).**
- **Improper alterations that adversely affect unit operation shall be corrected.**

19. RETURN AND SUPPLY

- **Return leaks in plenum/cabinet/duct that could draw in combustion products or other pollutants shall be repaired.**
- **Dirty blower chamber and fan blades shall be cleaned.**
- **Evaporator Section**
  - Evaporator coil shall be clean.
  - Penetrations shall be sealed (i.e., with cork tape).

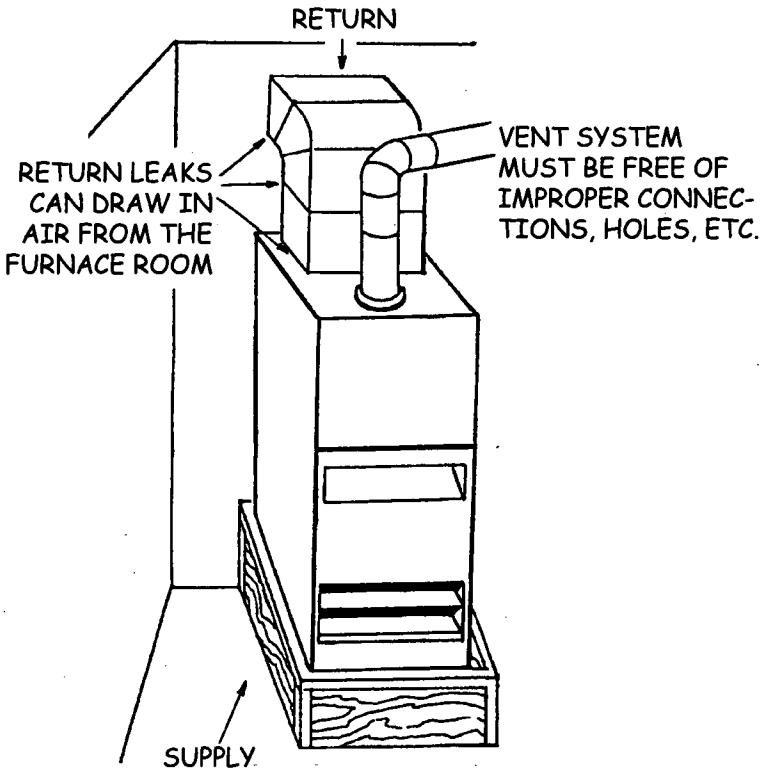

20. GAS CONTROL VALVE

- **The valve shall turn properly and be free of leaks and electrical defects (e.g., short or open).**
- **Gas pressure shall comply with manufacturer's specifications.**

21. GAS PIPING AND VALVES

- **Joints, fittings, appliance line valve, rigid and flexible connector, and gas control valve shall be checked for gas leaks by:**
  - Leak detection liquid/spray, or
  - Electronic leak detector.
- **Nonconforming items, including the following, shall be replaced with materials conforming to applicable code requirements:**
  - Defective gas shutoff valve or pipe fittings.
  - Rigid or flexible copper connector.
  - Butt-soldered joints.

22. WIRING

- **Unit shall be free of wiring defects (e.g., frayed or burned wires, loose or improper connections, etc.).**
- **Splices shall be:**
  - Located in junction boxes.
  - Secured with pressure splicing connectors (e.g., wire nuts).
- **Aluminum/copper splices shall not be made *unless:***
  - Splicing connectors used are identified for that purpose.
  - Conditions of use are met (e.g., application of antioxidant).

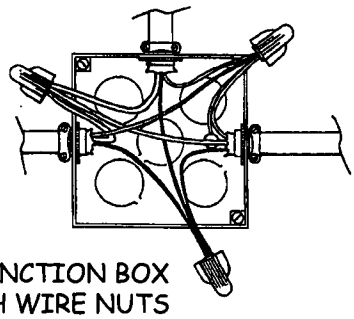

SPLICES IN JUNCTION BOX
SECURED WITH WIRE NUTS

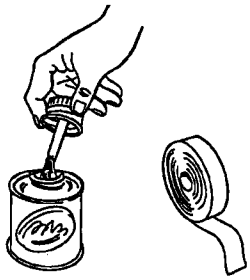

ANTIOXIDANT AND
ELECTRICIAN'S TAPE

23. PILOT AND THERMOCOUPLE OR PILOT GENERATOR

- **Thermocouple or pilot generator shall be correctly positioned in pilot flame.**
- **Pilot flame shall be properly adjusted.**
- **Voltage output shall be within specifications for proper operation of the Gas Control Valve.**

24. THERMOSTATS AND CONTROLS

- **Wall thermostat shall function properly:**
  - Anticipator correctly set to 24 volt heating control circuit amperage, when applicable.
  - Wiring connections correct and tight.
  - Unit level and securely installed.
- **Furnace controls, including limit switch and blower fan switch, shall operate in accordance with manufacturer's specifications.**
- **Power switches shall function properly, including:**
  - Blower access lockout/safety switch.
  - Switch controlling power to the unit (disconnect).
  - Blower speed control switch.

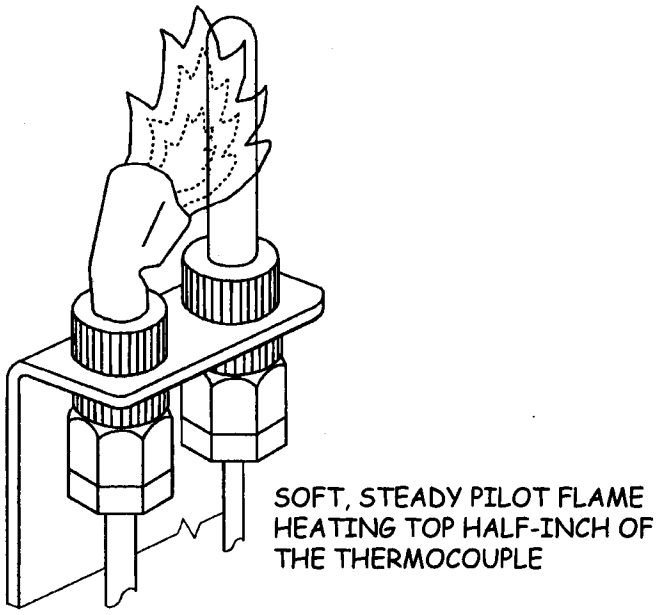

25. HEAT EXCHANGER

- **Heat exchanger shall be visually inspected for evidence of damage, deterioration, obstruction, etc.**
  - Mirror and a light shall be used, at a minimum.
  - A more sophisticated analysis shall be performed when necessary (e.g., smoke bomb or heat exchanger removal).
- **Observation shall be made for flame interference when blower starts.**

26. COMBUSTION AIR

- **Adequate combustion air shall be available to the furnace, as prescribed in Item 7.**

27. FLUE/VENT SYSTEM

- **Vent system defects shall be corrected.**
- **New components shall conform to applicable codes.**
- **Single-wall Flue/Vent Pipes**
  - Joints and connections shall be secured with 3 evenly-spaced sheet metal screws when:
    - New components are installed.
    - Existing connections are loose or unsafe.
- **Double-wall Type B or BW Flue/Vent Pipes**
  - Shall <u>not</u> be drilled or have screws installed, unless permitted by the manufacturer and local code.

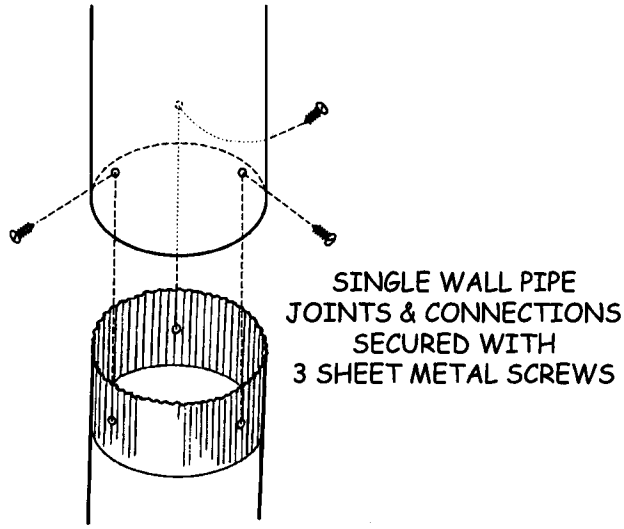

27. FLUE/VENT SYSTEM (continued)

- **Termination**
  - Vent termination shall be in conformance with local code.
  - Vent pipes within 10' of an evaporative cooler shall terminate at least 3' above the cooler.

28. BLOWER SECTION

- **The following conditions shall be corrected as needed to ensure proper operation of the unit:**
  - Dirty blower chamber and/or fan blades.
  - Evidence of loose or unsafe wiring.
  - Bearings in need of lubrication.

29. EVAPORATOR SECTION

- **Evaporator coil shall be clean.**
- **Plumbing and wiring penetrations shall be sealed with cork tape.**

30. APPLIANCE DRAFT

- **Open Combustion Natural Draft Furnaces**
  - Drafting shall be checked and verified to be acceptable, utilizing a Visual/Smoke Draft Test in accordance with WIS Section 29.

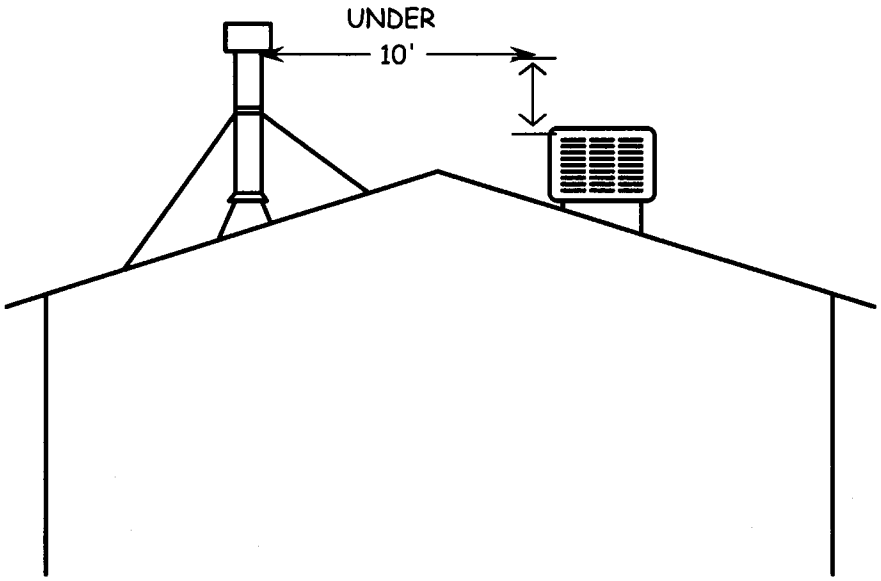

31. BURNERS

- **The furnace shall be checked for evidence of combustion problems, such as the following, and necessary corrections shall be made.**
- **Burner Performance**
  - When the burner(s) ignite, checks shall be made for:
    - Delayed ignition.
    - Excessive roll-out.
  - Burner(s) shall be examined for flame abnormalities, including:
    - Large yellow flame (more than 50% yellow).
    - Soft lazy flame or smothering flame.
- **Carbon and Rust**
  - The top of the burner(s), the heat exchanger, draft hood and flue/vent pipe shall be examined for excessive amounts of carbon or rust.
- **Burners and Venturies**
  - Shall be clean, and ports shall be unobstructed.
  - Burners shall be correctly aligned/positioned.
- **Burner Operation**
  - Air shutters shall be clean and adjusted for correct air/gas mixture.
  - Gas pressure shall comply with manufacturer's specifications.
  - Burner shall <u>not</u> be under- or over-fired.
- **Carbon Monoxide**
  - CO in flue gas shall be within limits specified by:
    - Manufacturer's instructions, and
    - LIEE WIS Section 29, NGAT.

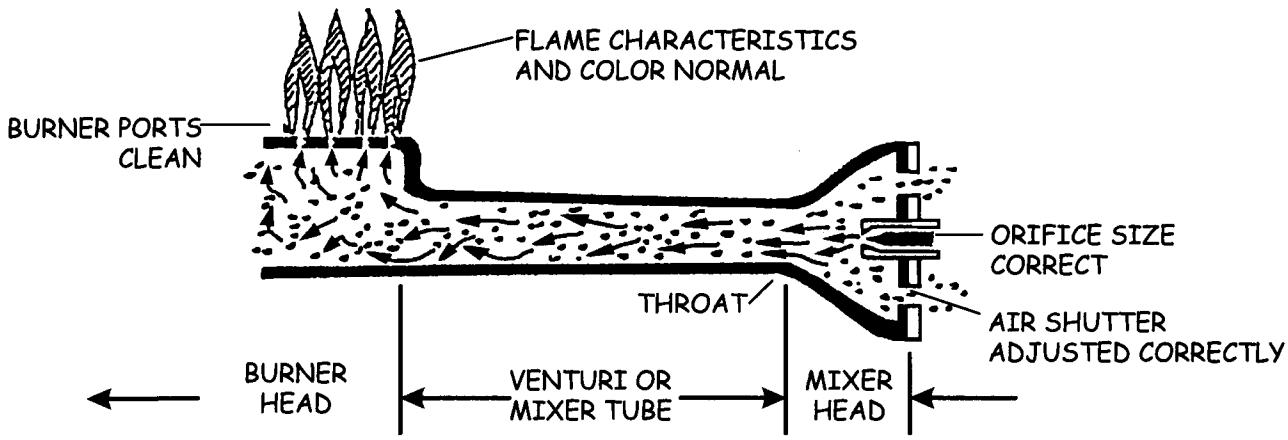

PART 5: NEW AIR CONDITIONER INSTALLATION WHEN COMBINED HEATING AND AIR CONDITIONING SYSTEM IS REPLACED

32. SIZING CRITERIA

- **System Size**
  - Unit shall be sized in accordance with Title 24 or local code, whichever is more stringent.
  - The tonnage of the new system should be equal to or smaller than the existing system.
- **Refrigerant Lines**
  - Shall be properly sized per manufacturer's specifications.
  - Shall provide the rated EER for the combination condenser and evaporator coil match.

33. EVAPORATOR (INDOOR) COIL AND CONDENSER (OUTDOOR) COIL

- **Split Systems**
  - An evaporator coil shall be installed which is verified to be a rated match with the condenser unit, as listed in current ARI Directory.
  - The coil label shall be visible.
  - Condenser coil and evaporator coil shall be verified to function properly.
  - An access panel shall be provided for cleaning.
- **Evaporator Coil Replacement**
  - Prior to charging, vacuum shall be drawn on the refrigerant lines to test for leaks and remove water vapor.
  - Depth of vacuum and length of time shall be as specified by the manufacturer.

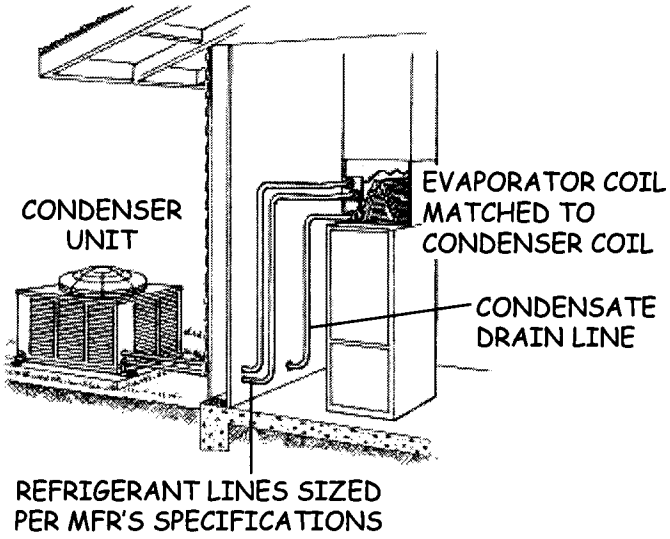

34. OPERATIONAL REQUIREMENTS

- **Air Flow**
  - Air flow through the indoor coil shall be adequate to meet manufacturer's specifications.
- **Refrigerant System Charging**
  - Refrigerant system shall be properly charged using methods specified by the manufacturer.
  - Refrigerant recovery shall be performed in accordance with Federal law.
    - A recovery device shall be used.
    - Ventilation to the atmosphere is not allowed.
  - Technicians performing evacuation and charging must have EPA-approved certification as a Type II or Universal technician.

35. FAU, PLENUMS AND DUCTS

- **Shall be in conformance with Item 8.**

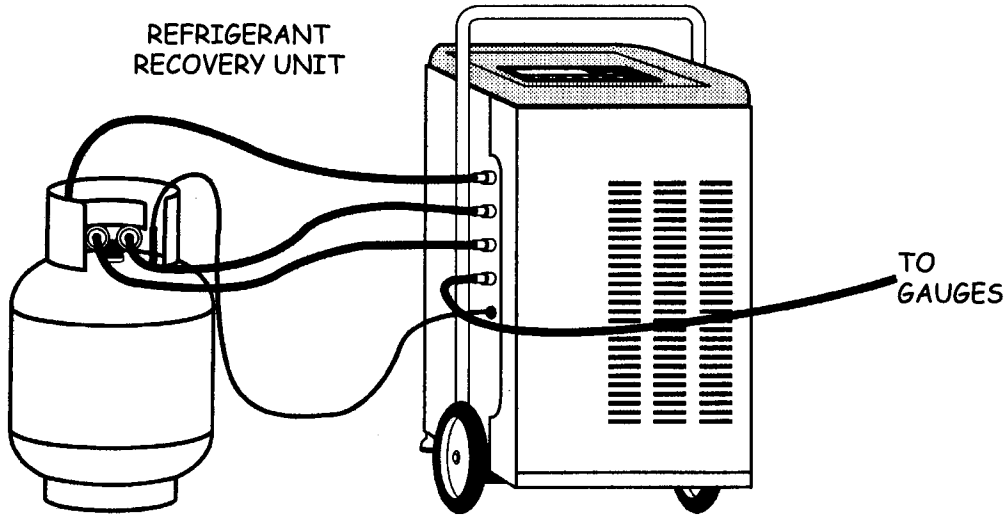

36. ELECTRICAL ACCESSIBILITY AND GROUNDING

- **All Equipment Installations**
  - Access and working space shall be provided in conformance with CEC Section 110-16 and local code.
- **Open Space for Panels and Equipment**
  - An open space shall be provided around electrical panels and equipment requiring servicing, which shall be minimum 30" wide by 36" deep or as specified by local jurisdiction.
- **Accessibility for Equipment**
  - The air-conditioning equipment shall be accessible for inspection, service, repair and replacement without removing permanent construction (per CMC Section 1106.3).
  - Minimum clearance between air-conditioning equipment and the adjacent structure/wall/obstruction shall be:
    - 36" on side(s) containing service access panels, and
    - 12" on all other sides, <u>or</u>
    - As specified by manufacturer and local jurisdiction.
    - *Exception:* Other clearances allowed when variance is granted by building department.

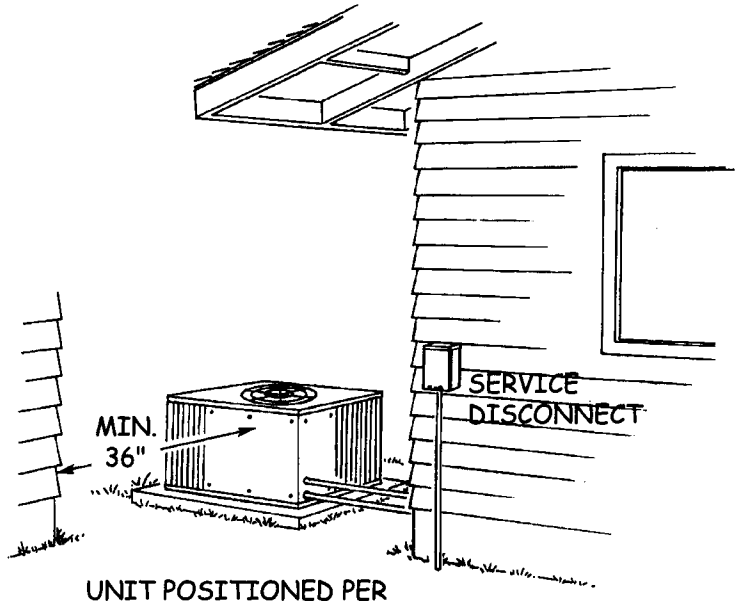

UNIT POSITIONED PER
MFR'S INSTRUCTIONS & LOCAL CODE

36. ELECTRICAL ACCESSIBILITY AND GROUNDING (continued)

- **Service Receptacle**
  - A 120-volt service receptacle shall:
    - Be located within 25' of the equipment.
    - Be on the same level as the equipment.
    - Not be connected on the load side of the disconnect.
- **Grounding**
  - Exposed noncurrent-carrying metal parts shall be grounded in compliance with CEC Article 250, Part J., Grounding Conductors (Sections 250-91 through 250-99), and Part K., Grounding Conductor Connections (Sections 250-112 through 250-119).
  - Parts of the equipment capable of carrying electrical current shall be grounded to the service ground by a continuous:
    - metal raceway,
    - wire, or
    - appropriate conductor in a cable assembly.
  - Connections and splices in the grounding conductor shall:
    - Be made in compliance with the CEC.
    - Provide a continuous path to the service ground with all disconnects and controllers in the open position.

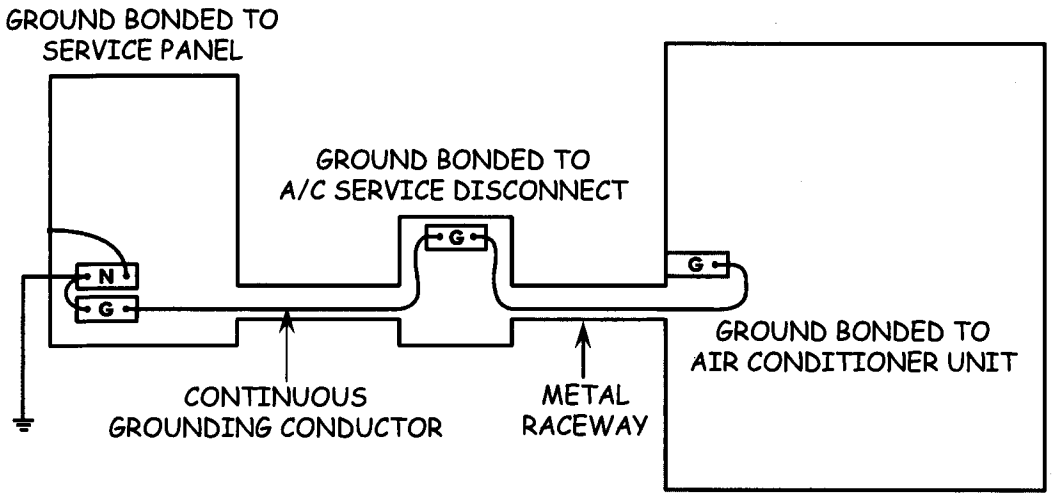

CONTINUOUS GROUNDING PATH FROM SERVICE PANEL
TO A/C UNIT PROVIDED BY CONDUCTOR OR RACEWAY

37. BRANCH-CIRCUIT PROTECTION

- **General Requirements**
  - Air-conditioning equipment shall be provided with:
    - Overcurrent protection per CEC Article 240.
    - Disconnecting means per CEC Article 440, Part B.
    - Branch-circuit short-circuit and ground-fault protection per CEC Article 440, Part C.
- **Protection Device Type**
  - The overcurrent protection device shall be the type specified on the air-conditioning equipment nameplate (see Table 18-1).
  - When nameplate specifies an HACR circuit breaker, the installed circuit breaker shall be listed and labeled HACR type (suitable for use with heating, air-conditioning and refrigeration equipment).
- **Protection Device Rating**
  - The branch-circuit protection device shall not exceed the maxi-mum amperage rating specified on the nameplate of the air-conditioning unit.

TABLE 18-1: OVERCURRENT PROTECTION SELECTION GUIDE

HEAT PUMP UNIT NAMEPLATE MARKED:	OVERCURRENT PROTECTION DEVICE* MUST BE:
"Maximum Fuse Size _X_ Amps"	An _X_ Amp Fuse
"Maximum Fuse or HACR Circuit Breaker _X_ Amps"	An _X_ Amp Fuse or HACR-Type Circuit Breaker
"Maximum Fuse, HACR Circuit Breaker, or Circuit Breaker _X_ Amps"	An _X_ Amp Fuse, HACR-Type Circuit Breaker, or Standard Circuit Breaker
"Maximum Overcurrent Protection Device _X_ Amps"	An _X_ Amp Fuse, HACR-Type Circuit Breaker, or Standard Circuit Breaker

***Amperage rating of the device must not exceed that specified on the nameplate.**

38. BRANCH CIRCUIT CONDUCTORS

- **Ampacity and Rating of Conductors**
  - Minimum wire size shall, as applicable, be:
    - Selected from CEC Tables 310-16 through 310-19, or
    - Calculated in accordance with CEC Section 310-15.
- **Voltage Drop and Wire Length**
  - Circuits shall be installed in conformance with CEC Section 210, Branch Circuits and Section 215, Feeders.
  - The voltage drop over the branch-circuit conductor should not exceed 2%. (See CEC Section 210-19(a) (Fine Print Note No. 4).)
  - In 240v circuits, the maximum conductor length should not exceed the values given in Table 18-2.

TABLE 18-2: MAXIMUM LENGTH OF CIRCUIT (IN FEET)

WIRE SIZE	AMPACITY OF CIRCUIT			
AWG	15	20	30	40
12	160'	120'	–	–
10	250'	190'	130'	–
8	300'	225'	150'	115'

Notes:

- **The table is based on a 4.6v drop (230v X 2% = 4.6v).**
- **The table applies to non-plated (uncoated) solid wire copper conductors at 75°C (167°F) ambient temperature.**
- **For alternate conditions or conductors, use applicable CEC Tables (e.g., see Article 210, "Branch Circuits"; Article 215, "Feeders"; and Chapter 9, Table 8, "Conductor Properties").**

39. UNIT DISCONNECTING MEANS (SERVICE DISCONNECT)

- **All Installations**
  - A disconnecting means, which is capable of disconnecting the air-conditioning equipment from the circuit feeder shall be installed in conformance with CEC Article 440, Part B, Disconnecting Means.
- **Location**
  - The service disconnect:
    - Shall be located within sight from, and readily accessible from the air-conditioning equipment, or as required by the local jurisdiction.
    - May be installed on or within the air-conditioning equipment.
- **Rating**
  - The rating of the disconnecting means shall not exceed the over-current rating of the installed equipment.
  - The rating of the installed fuses or circuit breakers shall not exceed:
    - The overcurrent rating of the installed air-conditioning equipment.
    - The rating of the box in which they are located.

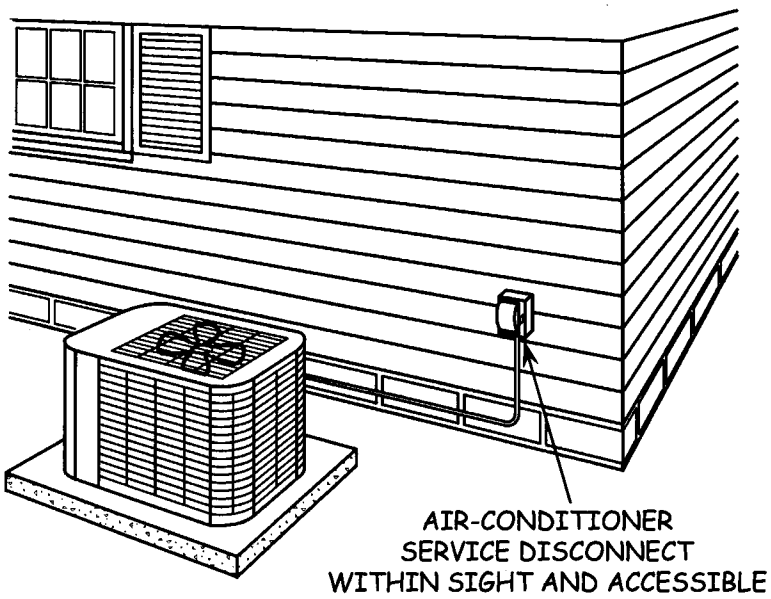

40. MOUNTING OF EQUIPMENT

- **Roof Mount**
  - The roof shall be structurally adequate to properly support the installed equipment in conformance with CBC and local code.
  - Design and installation of support frame or curb and installation of air-conditioning equipment and applicable safety apparatus shall be in conformance with manufacturer's instructions and local code.
  - Curb base and exposed roof penetrations shall be properly installed, flashed and sealed watertight.
  - The condensate drain line shall be:
    - Equipped with a trap.
    - Painted to resist UV degradation if PVC is used.
  - Roofing materials shall be in good condition and not in need of repair or replacement.

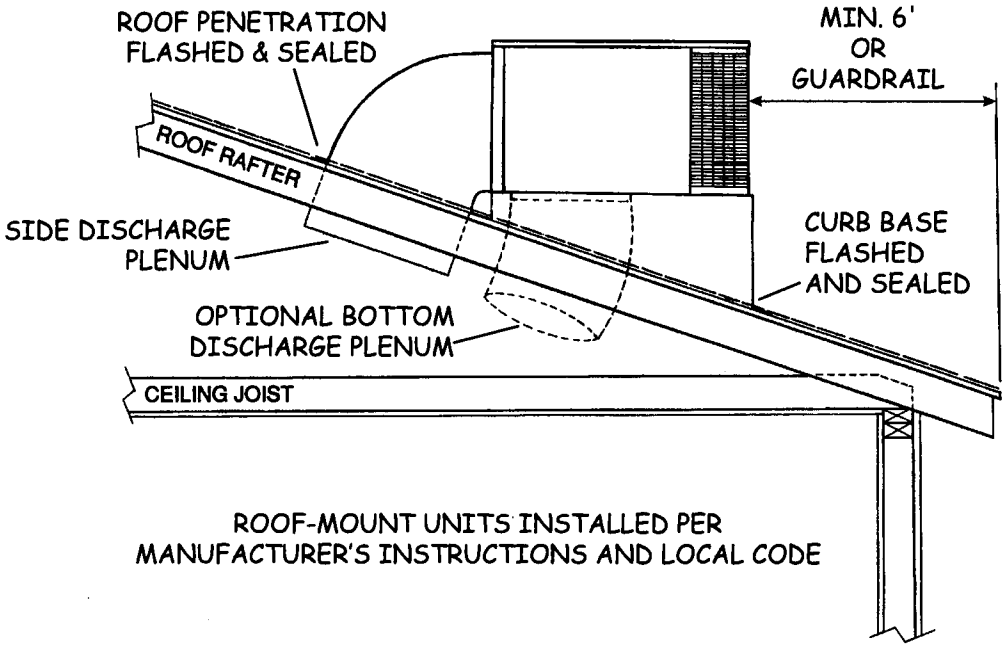

40. MOUNTING OF EQUIPMENT (continued)

- **Ground Mount**
  - Air-conditioning equipment shall be installed in conformance with CMC Section 1106.
  - The unit shall rest on concrete or other approved base extending at least 3" above the adjoining ground level.
- **Protection**
  - Units subject to mechanical damage shall be protected in conformance with CMC Section 308.
  - Unit shall be attached to base with seismic straps.
- **Overhead Clearance**
  - Overhead clearance shall be provided in conformance with manufacturer's specifications and local code.

41. PACKAGE UNIT FUEL-GAS PIPING

- **Gas lines, fittings, and valves shall be in conformance with Item 12.**

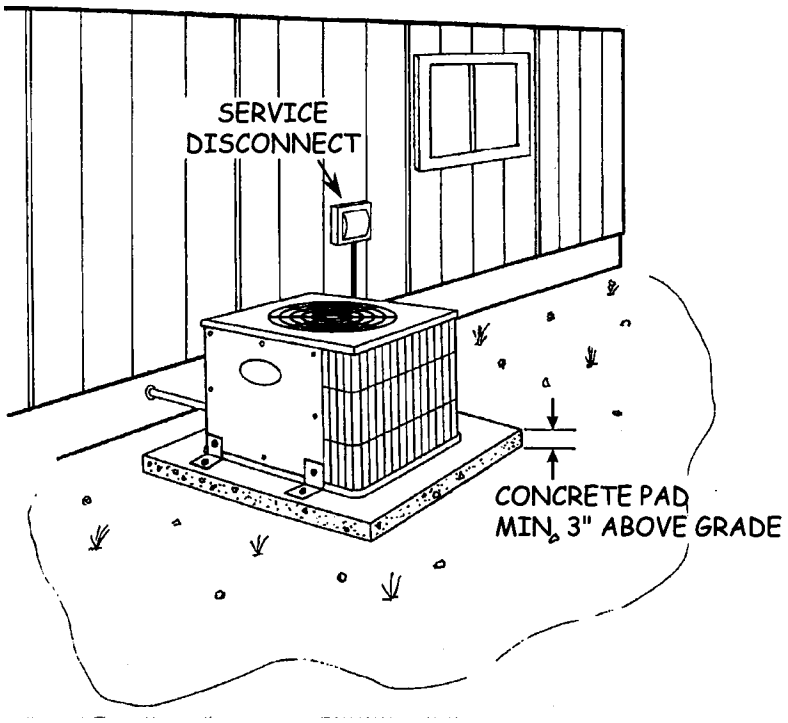

PART 6: WALL THERMOSTAT INSTALLATION

42. THERMOSTAT INSTALLATION

- **Location and Mounting**
  - New thermostat shall be installed at existing location unless affected by drafts, heat from direct sun, or adjacent appliances.
  - Thermostat installed in a new location:
    - Shall be mounted with the top of thermostat 60" above the floor when occupants are not handicapped.
    - May me installed as low as 48" above the floor when an occupant uses a wheelchair.
  - Thermostat shall be located away from direct sunlight, doors, windows, return/supply air, appliances, and sources of electrical interference.
  - Mounting bracket shall be securely attached to wall with screws for wood, or appropriate anchors for drywall and plaster.
  - Any holes or damage to wall from installation or removal of thermostat shall be repaired in a workmanlike manner.
- **Wiring**
  - All wiring shall be a minimum of 18 gauge and conform to manufacturer's specifications and local codes.
  - All wiring shall be installed inside wall cavities when possible.
  - When not inside a wall, exposed wiring shall be enclosed in a raceway.

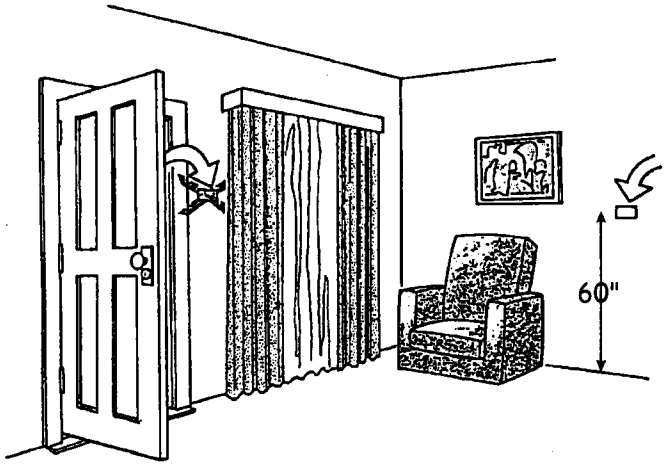

42. THERMOSTAT INSTALLATION (continued)

- **Programming and Operation**
  - Thermostat shall be cycled to insure proper operation of all functions.
  - Setbacks shall be programmed in accordance with customer's wishes.
- **Instructions and Warranty**
  - Customer shall be provided with:
    - A demonstration with verbal instructions for operating the thermostat and installing batteries.
    - The manufacturer's written instructions and warranty.

INSTRUCTIONS AND WARRANTY
PROVIDED TO CUSTOMER

PART 7: CENTRAL HEATING AND AIR CONDITIONER AIR FILTER INSTALLATION

43. FILTER SIZE AND INSTALLATION

- **Size**
  - Unframed filters shall be cut for a snug fit with maximum 1/4" tolerance.
  - Framed filters shall fit within the filter housing without crimping or buckling.
- **Installation**
  - All filters shall be installed in conformance with appliance and filter manufacturer's instructions.
  - The coarse ("hairy") side of "hog hair" type bonded fiber filters shall always face the incoming air.

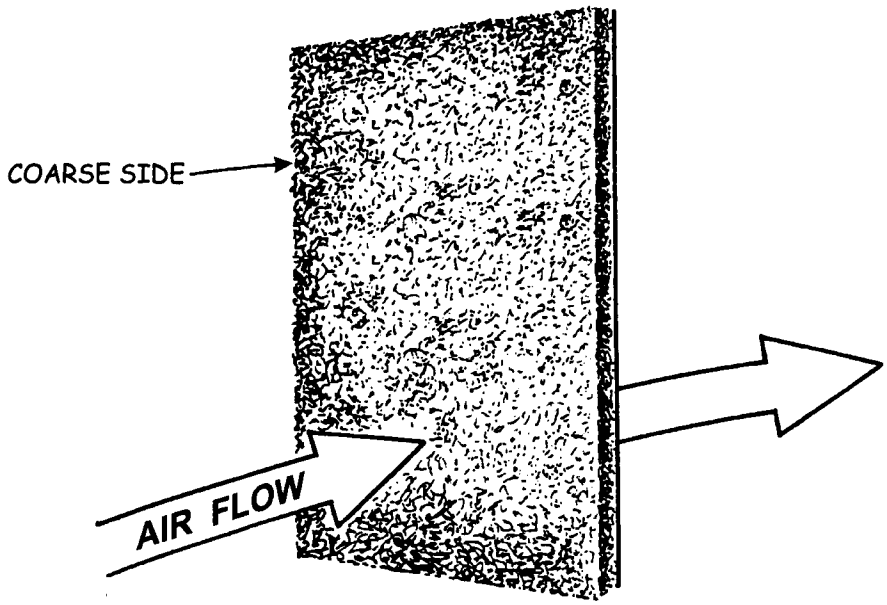

"HOG HAIR" TYPE
BONDED FIBER FILTER

44. UNFRAMED FILTER SUPPORTS

- **All Unframed Filters**
  - Unframed filters shall be supported, as needed, to prevent being drawn toward the air handler.
  - Manufacturer's instructions shall be followed.
- **1" Bonded Fiber Filters**
  - When not in conflict with appliance or filter manufacturer's instructions, steel rods (galvanized recommended) shall be internally installed, as needed, to stiffen filters over 20" long in either direction.
    - Support rods shall be:
      - Adequate gauge to provide the necessary stiffness.
      - Spaced a maximum of 20" on center.
      - Sized to fully extend from one edge of the filter to the other.
      - Inserted into the coarse filter layer near the netting side of "hog hair" type.
      - Inserted in the center of the filter medium, or per manufacturer's instructions, for other types.
  - At least one rod shall be positioned so that both ends are supported by a solid surface.
- **Other Materials**
  - Materials thinner than 1" shall be secured externally.
  - Filters shall not be installed when adequate support cannot be provided.

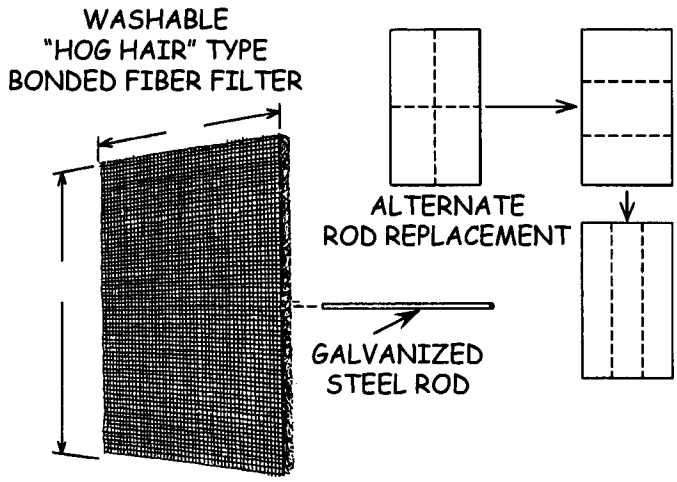

45. "A" SHAPED 1" BONDED FIBER FILTERS

- **All Filters**
  - The HVAC unit shall have:
    - Both upper and lower support devices.
    - Filter access which does not require the removal of any flue, duct, or pipe.
  - A single piece of material shall be used when possible.
  - Filters shall be sized, supported, and installed per Items 42 and 43.
- **One-Piece Unframed**
  - "Hog Hair" Type
    - The coarse side shall be slit deep enough to facilitate folding the material in an "A" shape.
    - The netting side shall not be cut.
  - Other Bonded Fiber Filters
    - Shall be cut and installed per manufacturer's instructions.
- **Two-Piece Unframed**
  - Two pieces of material shall be used only when a single larger piece can not be installed.
- **Framed**
  - Two framed filters of the correct size shall be installed.
  - Larger filters shall not be modified to fit by cutting or folding.

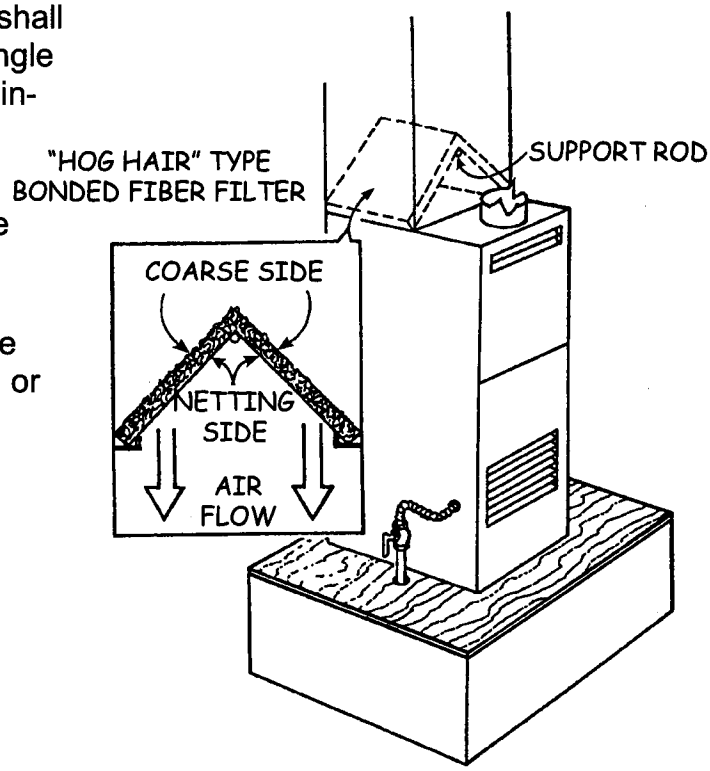

46. "V" SHAPED 1" BONDED FIBER FILTERS

- **All Filters**
  - The HVAC unit shall have:
    - A bottom support for the filter.
    - Filter access which does not require the removal of any flue, duct, or pipe.
  - A single piece of material shall be used when possible.
  - Filters shall be sized, supported, and installed per Items 42 and 43.
- **One-Piece Unframed**
  - "Hog Hair" Type
    - A "V" shaped groove shall be cut, as needed, in the coarse side to facilitate folding the material into a "V" shape.
    - The netting side shall not be cut.
  - Other Bonded Fiber Filters
    - Shall be cut and installed per manufacturer's instructions.
- **Two-Piece Unframed**
  - Two pieces of material shall be used only when a single larger piece can not be installed.
- **Framed**
  - Two framed filters of the correct size shall be installed.
  - Larger filters shall not be modified to fit by cutting or folding.

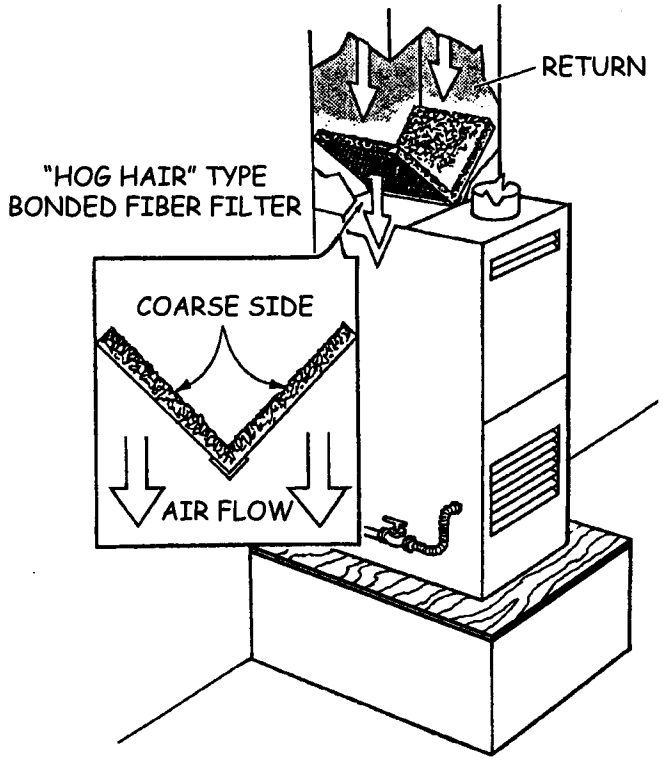

47. HORIZONTAL AND HAMMOCK STYLES 1" BONDED FIBER FILTERS

- **All Filters**
  - Filters shall be sized, supported, and installed per Items 42 and 43.
- **Horizontal Unframed**
  - Internal support shall be installed as needed.
- **Horizontal Framed**
  - Internal support not required.
- **Hammock Style**
  - Unframed filters shall be used.
  - Filter shall be secured with the wire mesh hammock.

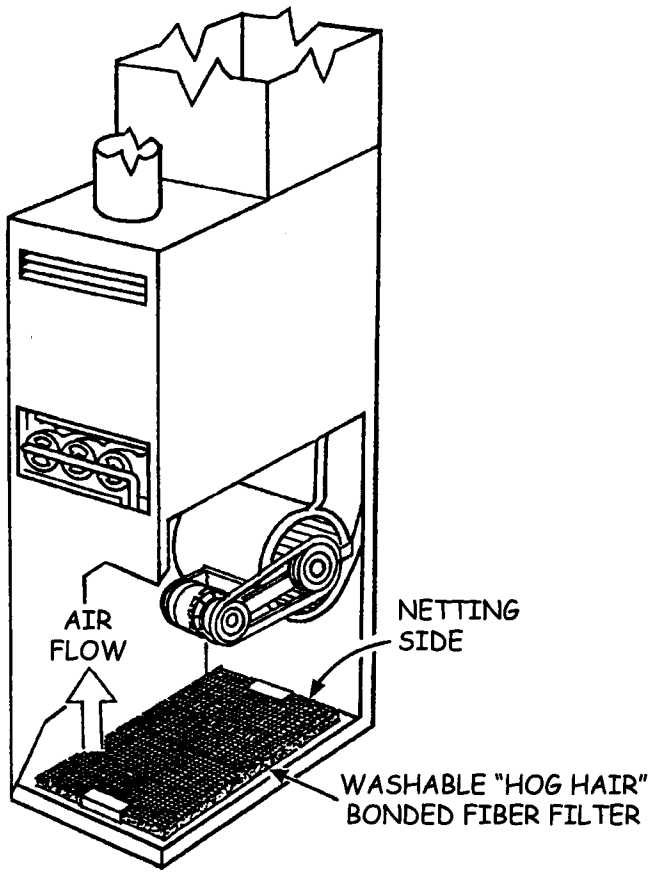

48. VERTICAL 1" BONDED FIBER FILTERS

- **All Filters**
  - Filters shall be sized, supported, and installed per Items 42 and 43.
- **Unframed**
  - Internal support shall be installed as needed.
- **Framed**
  - Internal support not required.
- **Vertical-Filter Cap**
  - Cap must be present.
  - Replacement cap must be formed from 26 gauge galvanized sheet metal.

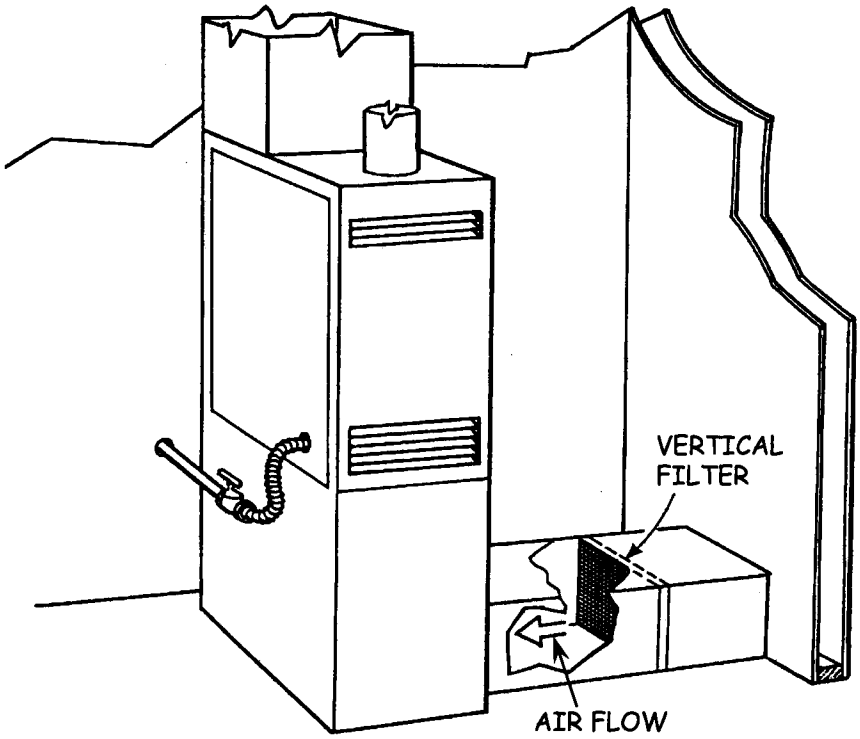

49. RETURN INTAKE GRILLE APPLICATIONS

- **All 1" Bonded Fiber Filters**
  - Filters shall be sized, supported, and installed per Items 42 and 43.
- **Unframed**
  - Internal support shall be installed as needed.
- **Framed**
  - Internal support not required.

50. TWO FILTERS

- **One Return**
  - When two filters exist within the same return path, one shall be eliminated.
  - The most accessible filter shall be replaced with a washable filter.
- **Two Returns**
  - Each return shall be treated separately as specified above for one return.

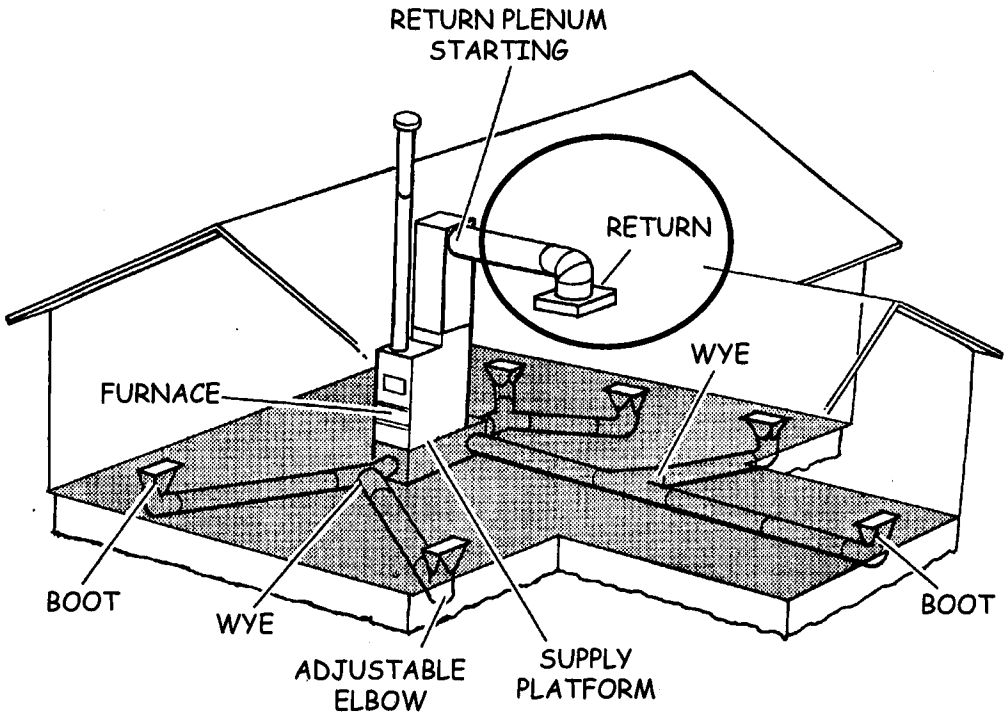

PART 8: POST-INSTALLATION/REPAIR

51. POST-INSTALLATION/REPAIR REQUIREMENTS

- **Appliance Operation**
  - The installed unit shall be tested for proper operation.
  - Proper operation shall be explained and demonstrated to the customer, including:
    - Operation of all user-accessible controls.
    - Filter replacement.
    - Routine maintenance recommended by manufacturer.
  - Manufacturer's written instructions and warranty documents shall be supplied to the customer.
- **Cleanup and Disposal**
  - Paint dust and chips, scraps, and other debris resulting from weatherization activities shall be cleaned up and removed from the premises—utilizing lead-safe practices when applicable.
  - All packing materials and installation debris shall be cleaned up and removed from the premises.
  - All replaced equipment and parts shall be removed from the premises and properly disposed of unless specified otherwise in the home improvement contract.
  - Refrigerant shall be recovered and all hazardous waste materials shall be disposed of in conformance with federal, state and local codes.

EPA
STRATOSPHERIC OZONE INFORMATION
HOT LINE
800-296-1996

INFORMATION ABOUT HANDLING REFRIGERANT AND OTHER HAZARDOUS MATERIALS IS AVAILABLE FROM EPA'S STRATOSPHERIC OZONE INFORMATION HOT LINE

SEE SEPARATE "NONFEASIBILITY CRITERIA" WORD DOCUMENT FOR THE NONFEASIBILITY PAGE TO THIS SECTION

DUCT SEALING STANDARDS

APPROVED MATERIALS

1. **ALL MATERIALS**
   - **Surface burning characteristics, per UL 723, ASTM E84, NFPA 255, or UL 2043:**
     - Flame spread rating not to exceed 25.
     - Smoke developed rating not to exceed 50.
   - **Only exterior-rated products shall be used on the exterior (outdoors).**
   - **UL 181A and 181B listed sealants shall be labeled per Table 20-1.**

2. **DUCT MASTIC**
   - **All Ducts**
     - Non-toxic and water resistant.
     - UL listed and labeled per UL 181A or 181B standards.
   - **Flexible Metallic and Nonmetallic Ducts**
     - UL labeled to include the marking "181B-M".
     - Compatible with the duct to which it is applied.
   - **Rigid Metal Ducts and Components**
     - Mastic shall be UL labeled "181A-M" or "181B-M".
   - **Rigid Fiberglass Ducts**
     - Mastic shall be labeled "181A-M".

TABLE 20-1: REQUIRED UL 181 IDENTIFICATION

DUCT TYPE	SEALING MATERIAL	UL IDENTIFICATION
RIGID METAL DUCTS AND COMPONENTS	PRESSURE SENSITIVE TAPE	MARKED "181A-P" OR "181A-P/181B-FX"
	HEAT ACTIVATED TAPE	MARKED "181A-H"
	MASTIC	LABELED "181A-M" OR "181A-M/181B-M"
FLEXIBLE DUCTS	PRESSURE SENSITIVE TAPE	MARKED "181B-FX" OR "181A-P/181B-FX"
	MASTIC	LABELED "181B-M" OR "181A-M/181B-M"

3. **MESH TAPE**
   - **All Ducts**
     - Mesh fabric used to reinforce duct mastic shall:
       - Comply with mastic manufacturer's instructions, or
       - Meet the following specifications:
         - Fiberglass mesh tape.
         - Weave per inch: 9 x 9 minimum.
         - Thickness: 0.006" minimum.
   - **Flexible Ducts and Rigid Metal Ducts**
     - Mesh tape width: 2" minimum.
   - **Rigid Fiberglass Ducts**
     - Mesh tape width: 3" minimum.

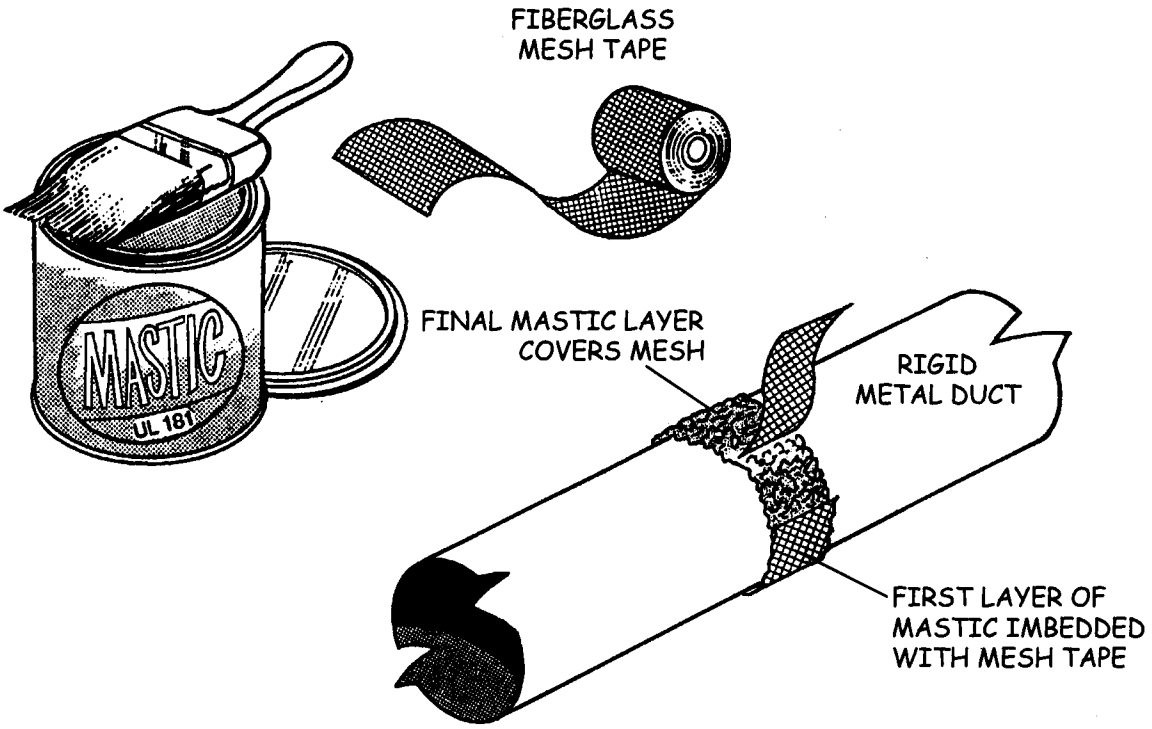

4. PRESSURE SENSITIVE TAPE

- **Approved Tapes**
  - Listed per UL 181A or 181B and marked "181A-P" or "181B-FX".
  - Metallic pressure sensitive tape: Aluminum foil backing.
  - Plastic pressure sensitive tape: Polypropylene or similar backing.
  - "Butyl Tape" (also known as "Foil Mastic"):
    - Aluminum foil tape with minimum 15 mil butyl adhesive.
    - Marked "181B-FX" or "UL 723" (or ASTM E84 or NFPA 255).
    - Butyl tape without "181B-FX" marking shall not be used to seal flexible ducts.
- **Tapes Not Allowed: Cloth-back tapes, even if marked "181B-FX".**
- **Tapes for Sealing Flexible Nonmetallic and Flexible Metallic Ducts**
  - Tapes with markings that include "181B-FX", minimum 2" wide.
- **Tapes for Sealing Rigid Metal Ducts and components**
  - Metallic tapes marked "181A-P" and/or "181B-FX", min. 2" wide.
    - *Exception*: "Butyl tape" without "181A-P" or "181B-FX" markings may be used to seal rigid metal-to-metal connections.
- **Tapes for Sealing Rigid Fiberglass Ducts**
  - Metallic tapes marked "181A-P", minimum 2-1/2" wide.
- **Access Panels**
  - Metallic tapes with non-butyl (e.g., acrylic) adhesive.
- **High Temperature Applications**
  - Metallic tapes with non-butyl (e.g., acrylic) adhesive and service temperature rating of at least 265°F.

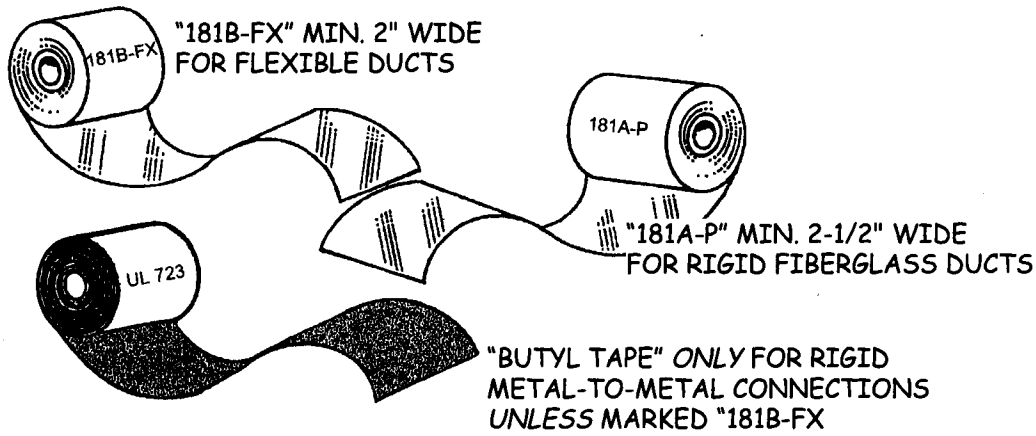

5. DRAWBANDS AND CLAMPS

- **Materials**
  - Drawbands and clamps used to secure flexible nonmetallic ducts shall comply with duct manufacturer's installation instructions.
  - Drawbands shall meet the following minimum standards:
    - Weather- and UV-resistant (e.g., black) nylon duct straps/ties rated for outdoor use.
    - Loop tensile strength: 150 pounds minimum.
    - Service temperature rating 165°F minimum.
  - Clamps shall be stainless steel worm-drive clamps.
- **Drawband Installation:**
  - Drawbands shall be tightened with an adjustable tensioning tool in accordance with duct manufacturer's instructions.

6. DUCT BOARD

- **High Density Fiberglass Duct Board**
  - Conformance to ASTM C726, or NFPA 90B, or UL Class 1.
- **Foam Board and Foam Sealant**
  - Not allowed as a barrier material or sealant in the repair of building cavities used as ducts, platforms, or other duct system components.

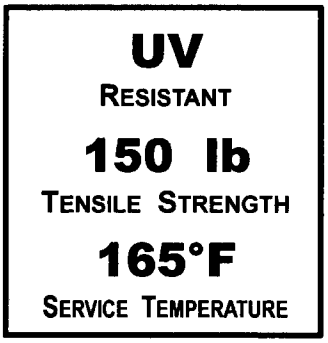

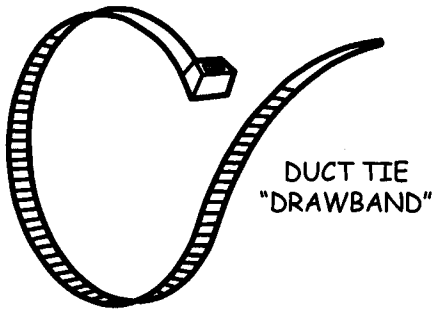

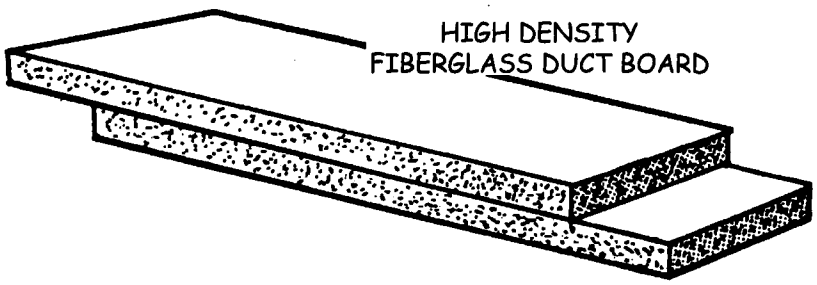

7. CAULKING MATERIALS

- **All Materials**
  - Shall be non-toxic.
  - Shall be selected and applied in accordance with Section 1.
- **Latex Sealing Compounds**
  - Conformance with ASTM C834.
- **Butyl Rubber Sealants**
  - Conformance with F.S. A-A-272A
- **Elastomeric Joint Sealants (Silicone, Polyurethane, Polysulfide)**
  - Conformance with ASTM C920 or F.S. A-A-1556A.

8. CORK TAPE

- **Shall be non-toxic.**
- **Shall be non-corrosive to copper.**
- **Elongation: 200% minimum.**
- **Hardening: 37% maximum.**

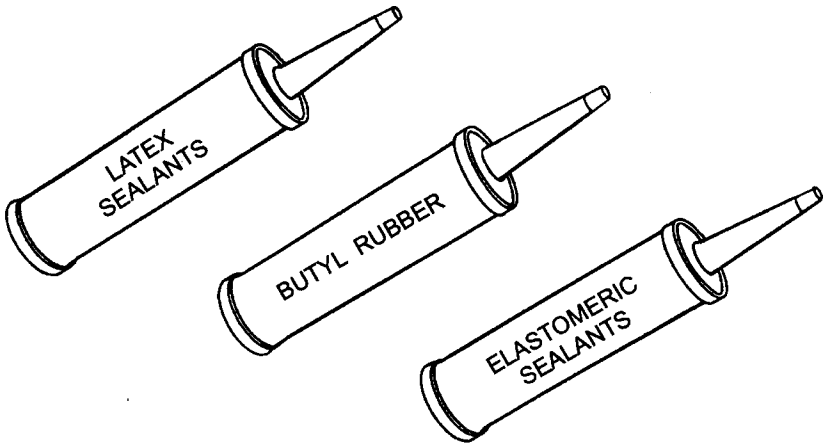

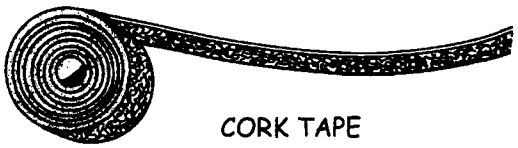

9. ALL FLEXIBLE DUCTS

- **Ducts shall conform to NFPA 90B and UL 181 Class 1.**
- **Nonmetallic insulated ducts with air-permeable core <u>not</u> allowed.**
- **Insulation minimum thermal resistance shall be as indicated below or greater if required by local code.**
  - Natural Gas Heat
    - R-4.2 in CEC climate zones (CZ) 6 – 8.
    - R-6 in CZ 1 – 5 and 9 – 13.
    - R-8 in CZ 14 – 16.
  - Electric Heat
    - R-8 in all CZ.
- **Vapor barrier (Jacket):**
  - Thickness: 2.5 mils minimum.
  - Permeance: 1.0 perm maximum.
  - Degradation Protection: UV-resistant material (e.g., silver metalized polyester jacket). .

10. FLEXIBLE METALLIC DUCTS

- **Ducts shall be rated to withstand the designated pressures and velocity of the system, but not less than:**
  - 2 inches of water column (IWC) (500 Pa) positive pressure,
  - 0.75 IWC (188 Pa) negative pressure, and
  - 2500 fpm velocity.
- **Core shall be fabricated from minimum 0.0065" thick aluminum material or equivalent.**

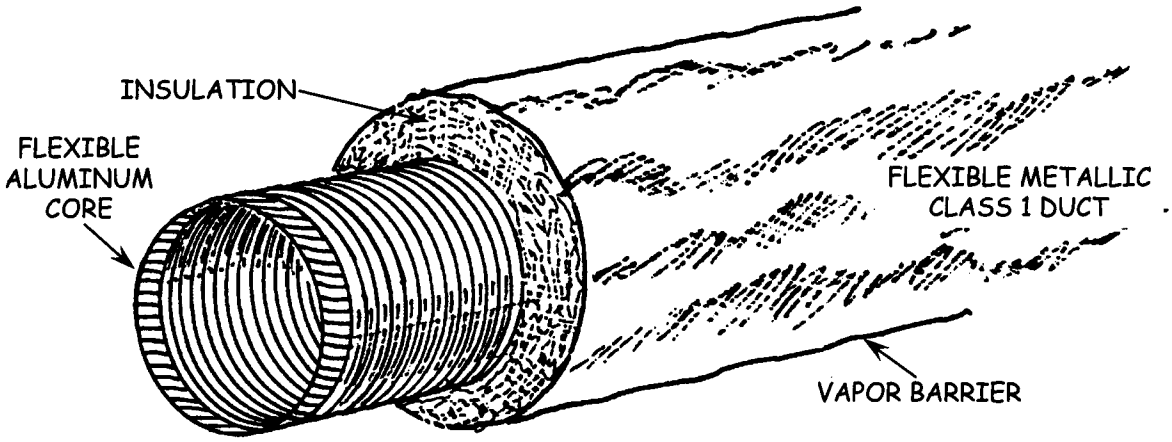

11. FLEXIBLE NONMETALLIC DUCTS

- **Ducts shall be rated to withstand the designated pressures and velocity of the system, but not less than:**
  - 2 IWC (500 Pa) positive pressure,
  - 0.75 IWC (188 Pa) negative pressure, and
  - 2000 fpm velocity.
- **Duct Core ("Inner Liner")**
  - Core shall be fabricated with a spring steel helix bonded within a nonporous material (e.g., molded composite or 2-ply lamination of polyester).
  - Air-permeable core not allowed.

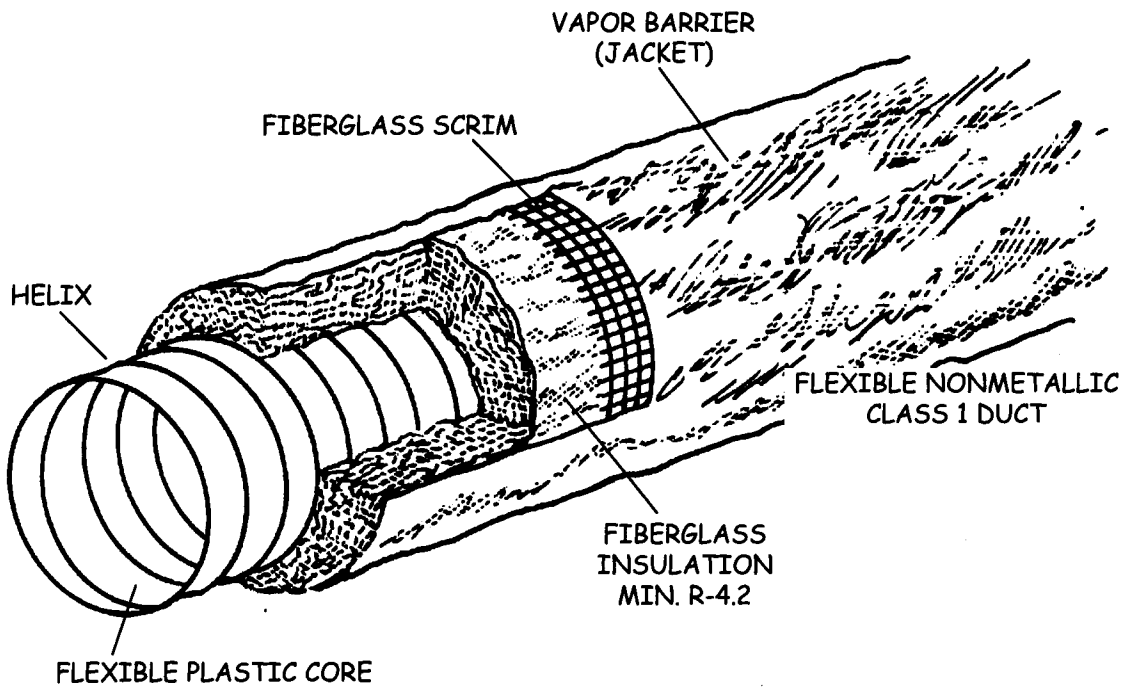

12. RIGID METAL DUCTS

- **All Ducts**
  - Shall conform to NFPA 90B and UL 181 Class 1 or Class 0.
  - Shall be constructed of noncorrosive material.
  - Rectangular metal ducts shall conform to CMC requirements.
  - Round metal ducts shall conform to minimum thickness requirements of the CMC, some of which are shown in Table 20-2.

TABLE 20-2: MINIMUM GAGE OF ROUND METAL DUCTS

ROUND METAL DUCTS AT POSITIVE STATIC PRESSURE UP TO 2 IWG (500 PA)		
DIAMETER OF DUCT	MIN. SHEET GAGE (GALVANIZED STEEL)	MIN. B. & S. GAGE (ALUMINUM)
Up to 14"	26	24
15" to 23"	24	22
24" to 37"	22	20
38" to 51"	20	18

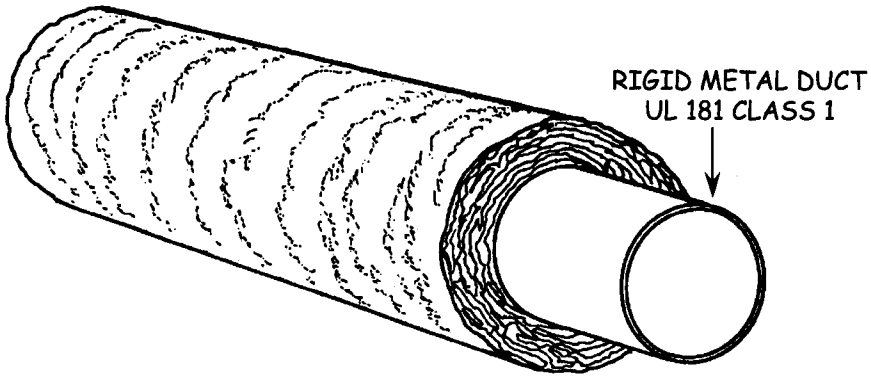

13. SHEET METAL

- **All Rigid Components**
  - Components shall be constructed of noncorrosive materials.
  - Fittings (starting collars, splicing sleeves/couplings, adjustable elbows, wyes, etc.) shall have wall thickness (gage) no thinner than specified for attached ducts (per Item 12 and Table 20-2).
- **New Fittings Used with Flexible <u>Nonmetallic Ducts</u>**
  - Starting Collars
    - 4" installed length (6" recommended).
    - 26 gage galvanized steel up to 14" diameter.
  - Splicing Sleeves
    - 6" length (8" recommended).
    - 26 gage galvanized steel up to 14" diameter.
  - All Fittings
    - Fittings shall be beaded at each core connection (e.g., both ends of a sleeve) when flexible nonmetallic ducts are attached.
      - *<u>Exception</u>:* When a preexisting fitting is <u>not</u> beaded, the core's wire coil shall be secured to the fitting as prescribed in Item 24.

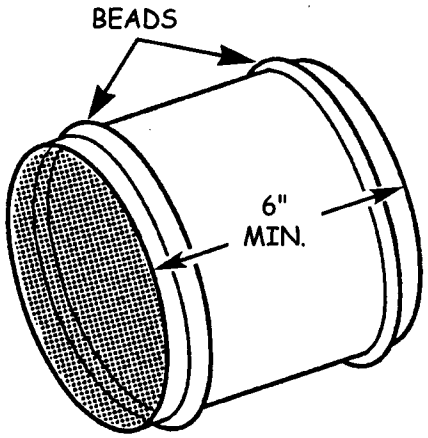

BEADED SLEEVE MINIMUM 6" LONG FOR FLEXIBLE NONMETALLIC DUCTS

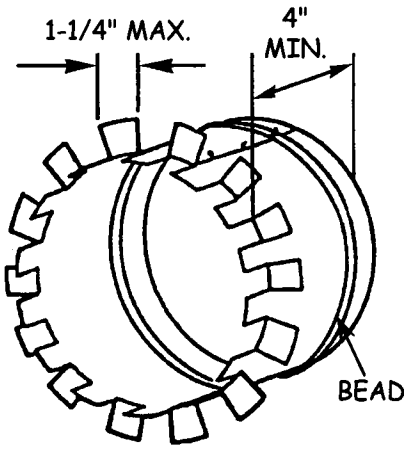

SHEET METAL COLLAR (DOVETAIL) MIN. 4" LONG AND BEADED FOR FLEXIBLE NONMETALLIC DUCTS

14. DUCT SUPPORTS

- **All Ducts**
  - Support materials shall be corrosion resistant and shall:
    - Conform to duct manufacturer's installation instructions.
    - Be installed in compliance with Item 18.
- **Flexible Ducts (Horizontal and Vertical)**
  - Nonmetallic Support Straps
    - May be used only if allowed by the local jurisdiction.
    - Polypropylene monofilament, woven polyester, polyester scrim reinforced vinyl laminate, or equivalent.
      - Minimum width: 1-3/4".
      - Minimum tensile strength: 70 lbs./inch of width.
  - Sheet Metal Support Straps and Saddles
    - Width: 1-1/2" minimum.
    - Thickness: 26 gage minimum.
  - Support Saddles
    - Shall fit neatly around and cover lower half (180°) of duct.
    - Shall <u>not</u> constrict inner diameter of duct nor cut the jacket.

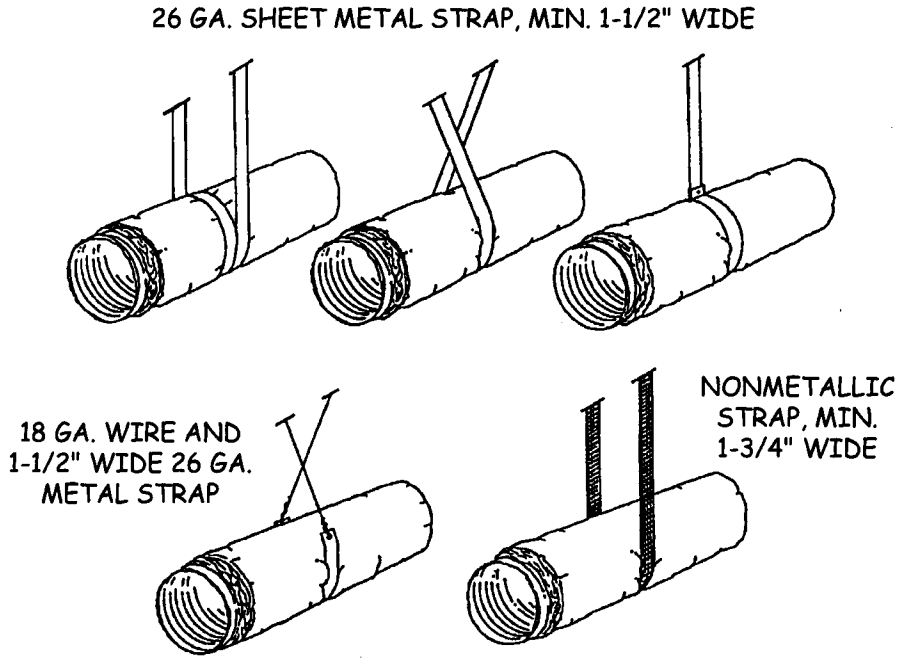

14. DUCT SUPPORTS (continued)

- **Horizontal Rigid Round Metal Ducts**
  - Up to 10" Diameter
    - Galvanized steel straps, same gage as duct, 1" minimum width, or
    - 18 gage galvanized steel wire.
  - 11" to 40" Diameter
    - Galvanized steel straps, same gage as duct, 1" minimum width, or
    - 8 gage galvanized steel wire tied to a galvanized steel band, 1" minimum width, surrounding the duct.
- **Vertical Rigid Round Metal Ducts**
  - Up to 10" Diameter
    - 18 gage galvanized steel straps, 2" minimum width.
  - 11" to 20" Diameter
    - 16 gage galvanized steel straps, 2" minimum width.

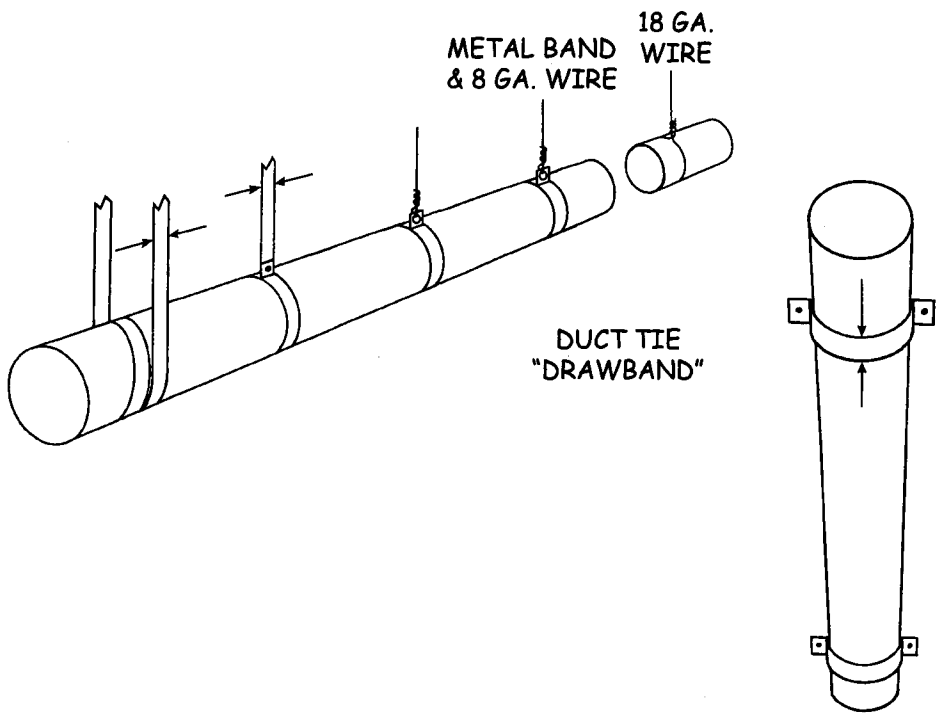

DUCT SYSTEM DIAGNOSTICS

15. DUCT SYSTEM INSPECTION AND ANALYSIS

- **Asbestos Caution**
  - When any part of a duct system is known or suspected to be made of or insulated with asbestos, no action shall be taken which will cause such material to be unencapsulated or discharged into the air.
- **Internal Inspection of Ductwork**
  - Supply registers and return grilles shall be removed to facilitate inspection and performance of repair/sealing work.
  - A mirror and light shall be used as needed to perform the internal inspection of boot joints, connections and duct runs.

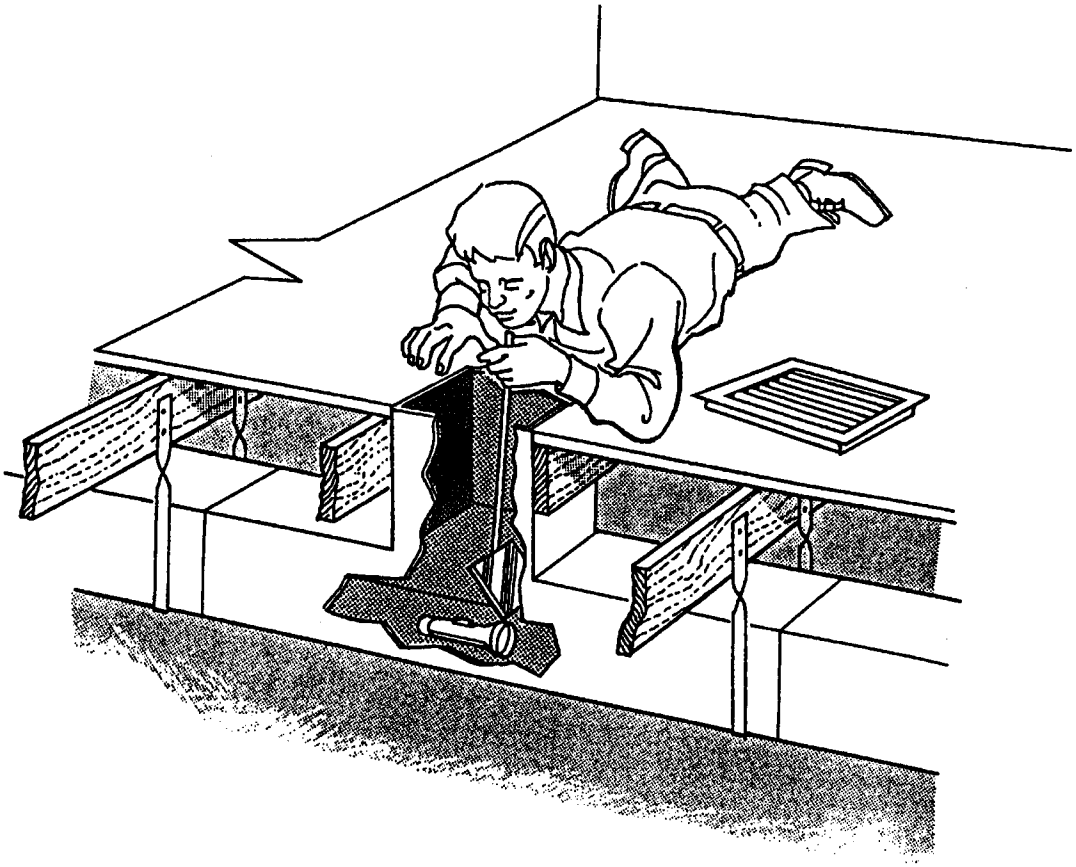

15. DUCT SYSTEM INSPECTION AND ANALYSIS (continued)

- **External Inspection of Duct System**
  - The duct system shall be inspected for disconnections and other leaks and evidence of damage and deterioration.
  - All accessible portions of the duct system shall be accessed (i.e., where crawl clearance is adequate per program Policies & Procedures).
  - Diagnostics may include:
    - Pressurizing the duct system with a duct tester fan (e.g., Duct Blaster®) or blower door to locate leaks.
    - Checking plenums and starting collars and plenum/furnace connections (areas with largest pressures and leaks).
    - Shaking rigid ducts and looking for discolored fiberglass insulation.
    - Checking flex duct connections for loose or brittle cloth tape.
    - Checking metal flex ducts for evidence of crushed sections.
    - Checking for broken duct supports and ducts lying in the dirt.

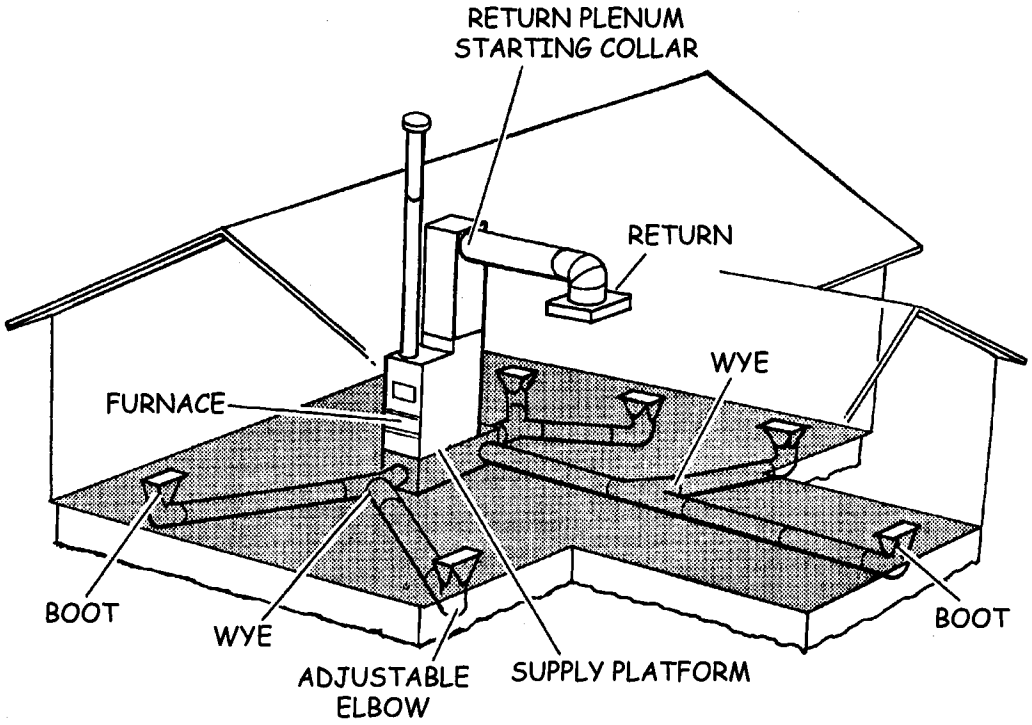

15. DUCT SYSTEM INSPECTION AND ANALYSIS (continued)

- **Pressure Diagnostics**
  - When using a duct pressurization system (Duct Blaster®):
    - Registers/grilles shall be sealed (e.g., with masking tape).
    - Duct tester shall be attached to the return grille nearest the FAU, or as instructed by the manufacturer.
    - Ducts shall be pressurized to 25 Pa (0.1 iwc).
    - Test shall be performed in accordance with manufacturer's instructions, with the result being the measured duct leakage.
  - Duct testing performed to determine whether duct sealing is feasible (initial leakage meets start criteria) and when to stop sealing (final leakage meets stop criteria) shall be performed as prescribed in Section 10, Duct Testing Standards.

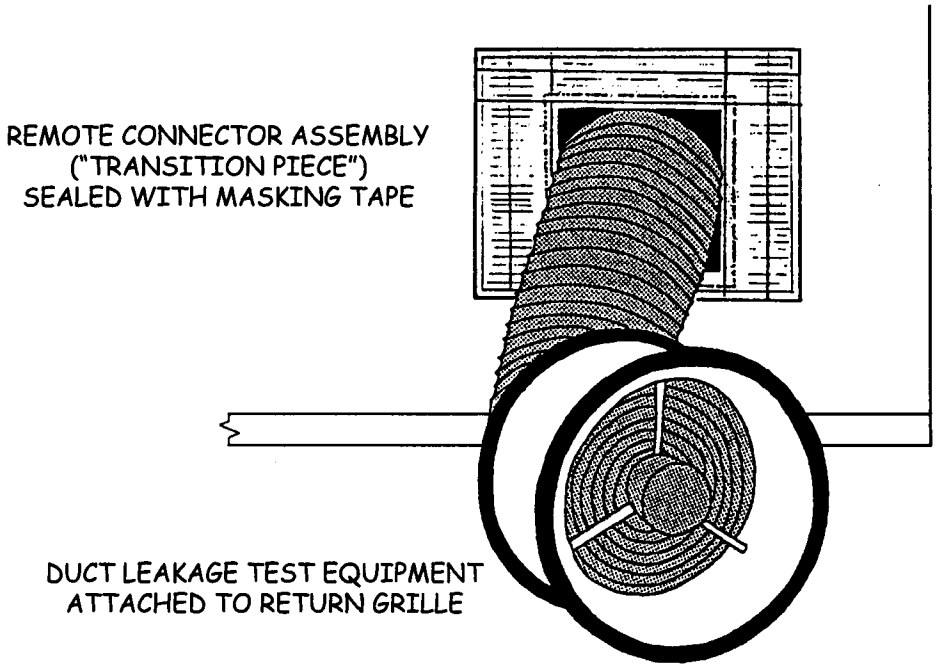

15. DUCT SYSTEM INSPECTION AND ANALYSIS (continued)

- **Duct System Balance**
  - Duct systems shall be balanced to provide adequate air movement throughout the living space with interior doors closed.
  - Rooms closed off by doors from the FAU return intake shall be provided with an adequate return air path.
  - The required return air path for each room shall be provided by a permanent means, such as one of the following:
    - A transfer or jump duct from the room to the hallway.
    - Uncloseable grilled or louvered venting in the door or wall.
    - An undercut door leading to the hallway.

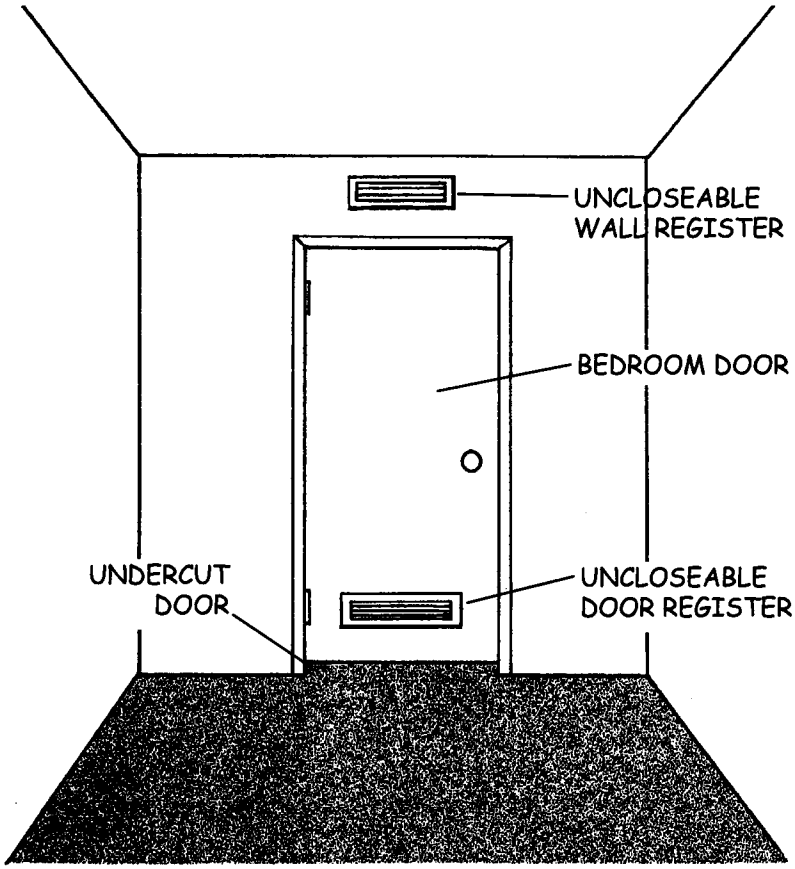

DUCT INSTALLATION

16. GENERAL INSTALLATION CRITERIA

- **All Duct Installations**
  - Installation shall comply with these standards, manufacturer's instructions and local codes, with the more stringent requirements taking precedence.
  - Ducts shall be:
    - Installed with at least 4" of separation from earth.
    - Protected from physical damage.
    - Installed in locations not exposed to the weather, unless designed for exterior use.
    - Supported as prescribed in Item 18.
  - Ducts installed within a closet or room shall be enclosed within a cavity constructed of materials equivalent to those used in construction of the closet/room.
  - A building cavity shall not be used as a duct without a sealed duct board or metal liner.
  - Existing platform returns shall be sealed per Item 30.

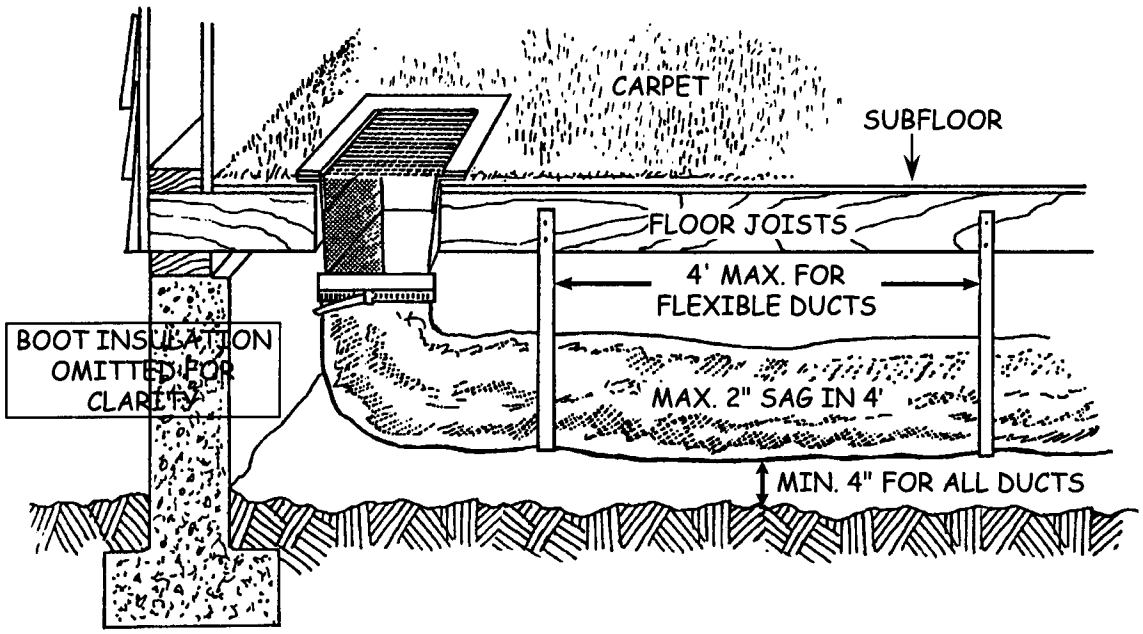

16. GENERAL INSTALLATION CRITERIA (continued)

- **Surface Preparation**
  - Preparation shall be in conformance with duct and sealant manufacturers' instructions.
  - Surfaces shall be:
    - Cleaned prior to application of tapes and sealants.
    - Free of dust, dirt, oil, grease, moisture and similar substances.
- **Air Handler Operation**
  - Air handler shall:
    - Be off during the application of all tapes and sealants.
    - Remain off for the drying time specified by sealant manufacturer.

17. DRAWBAND INSTALLATION

- **Drawbands used to secure flexible nonmetallic ducts shall be installed:**
  - In accordance with manufacturer's instructions.
  - Behind the bead when the fitting is beaded.
  - Tightened appropriately with an adjustable tensioning tool.
  - With the excess (tail) removed.
- **Stainless steel worm-drive clamps may also be used.**

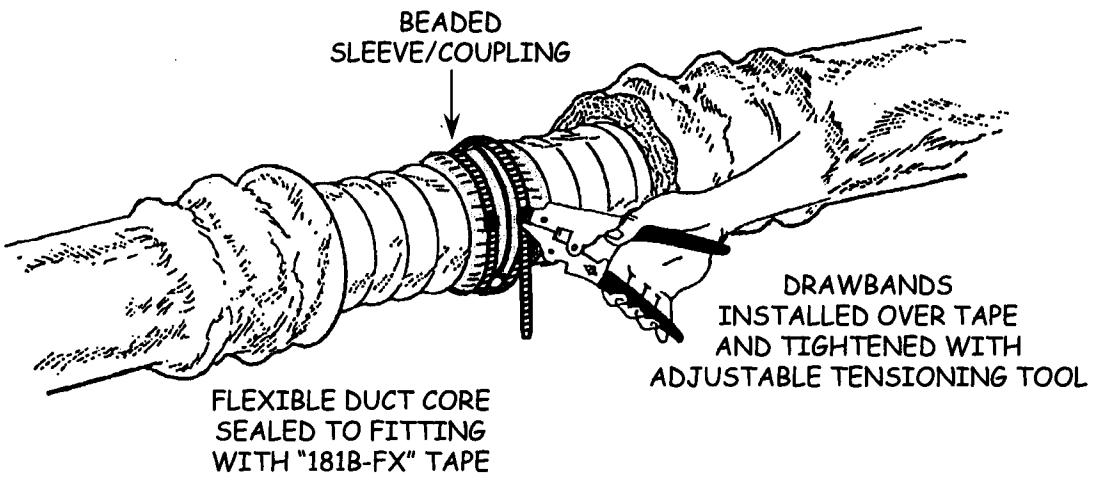

18. DUCT SUPPORT INSTALLATION

- **All Duct Supports shall:**
  - Comply with duct manufacturer's instructions and local code.
  - Be installed in accordance with support manufacturer's instructions.
- **Flexible Ducts**
  - All Installations
    - Straps and other means of support shall not constrict the duct below its rated internal diameter.
    - Duct may rest on ceiling joists or truss members, if:
      - Support spacing and sag limitations are met.
      - Duct is not wedged between truss members.
    - Termination devices (e.g., register boots) shall be properly secured and shall not rely upon duct for support.

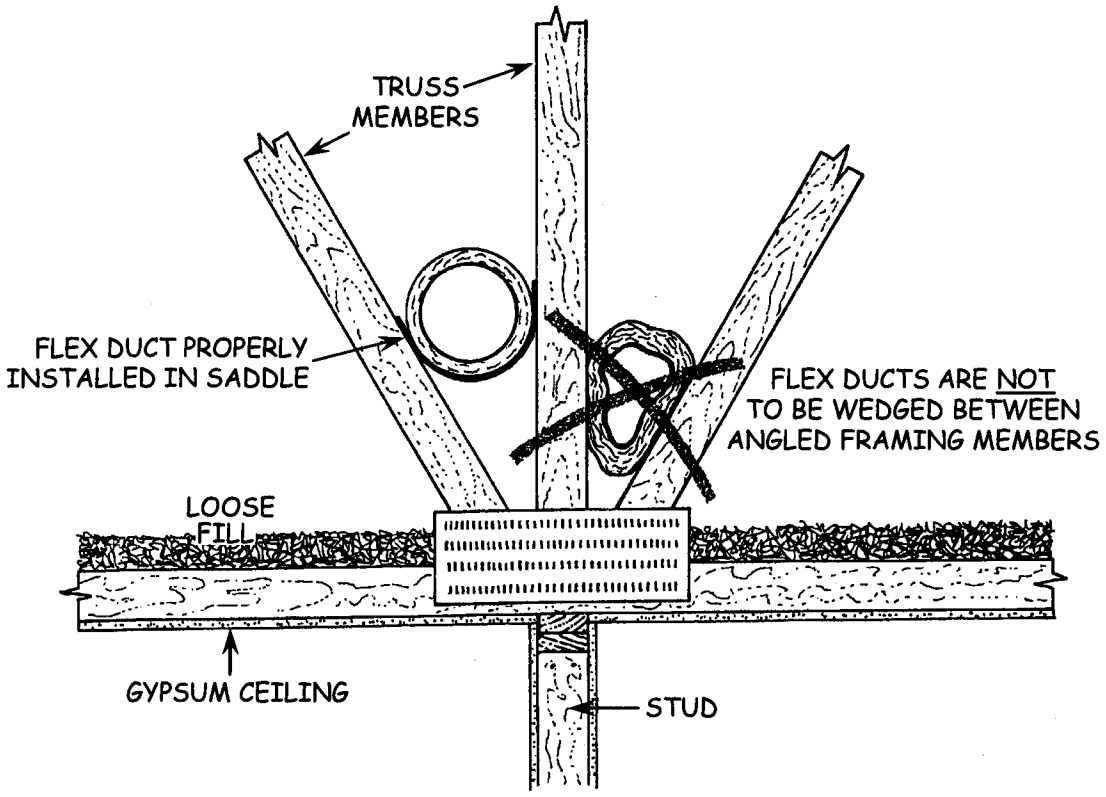

18. DUCT SUPPORT INSTALLATION (continued)

- **Flexible Ducts (continued)**
  - Nonmetallic Support Straps
    - Acceptable when allowed by the local jurisdiction.
    - At each end, at least 2" shall be folded over and secured by two or more anchors that penetrate both layers of strap material.
  - Horizontal Flexible Ducts
    - Spacing between supports shall be 4' maximum.
    - Sag shall be no more than:
      - 1/2" per foot of distance between supports.
      - 2" between supports.
  - Vertical Flexible Ducts
    - Spacing between supports shall be 6' maximum.

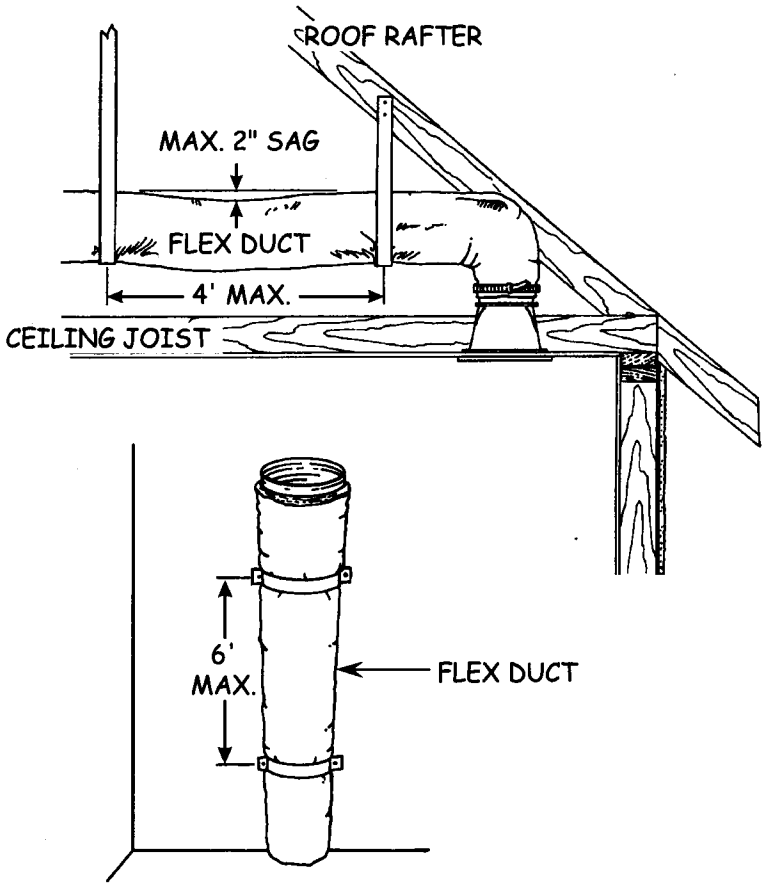

18. DUCT SUPPORT INSTALLATION (continued)

- **Rigid Round Metal Ducts**
  - Horizontal Installations
    - Spacing between supports shall be 10' maximum.
    - Support shall tightly encircle the duct.
  - Vertical Installations
    - Spacing between supports shall be 12' maximum.
- **Rigid Rectangular Metal Ducts**
  - Horizontal Installations
    - Spacing between supports shall be 10' maximum.
    - Support straps shall be secured to sides of duct with sheet metal screws, rivets or bolts.
  - Vertical Installations
    - Spacing between supports shall be 12' maximum.
- **Rigid Fiberglass Ducts**
  - Ducts shall be supported and reinforced in conformance with the CMC and local code.
- **Horizontal Plenums (Metal and Fiberglass Duct Board)**
  - Shall <u>not</u> rely on furnace for support.
  - Shall be independently supported at each end, and intermediately if over 10' in length.

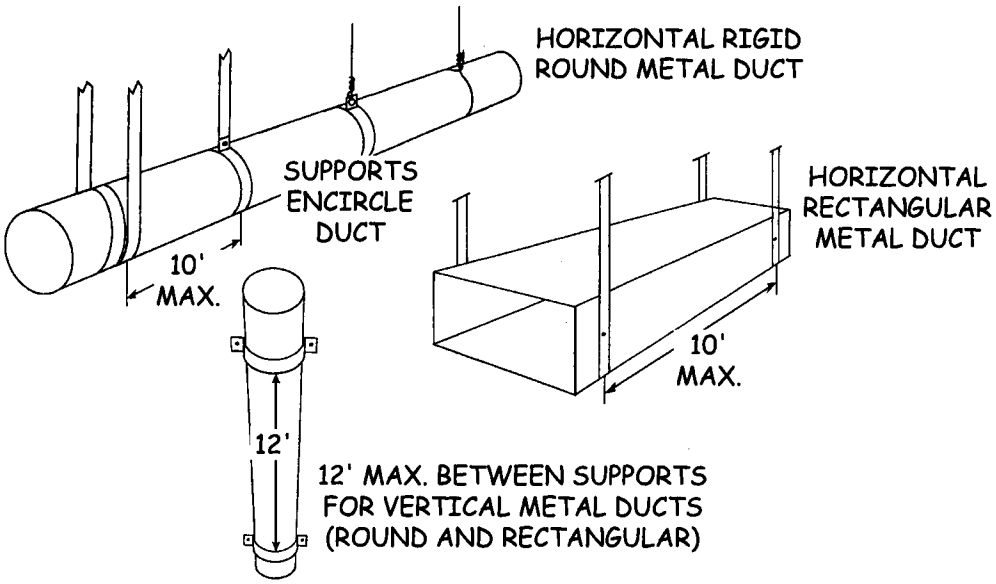

DUCT REPAIR AND SEALING

19. DUCT CLOSURE SYSTEMS

- **All Closure Systems**
  - Sealants shall be applied per manufacturer's instructions.
  - A complete, durable seal shall be achieved.
  - Pressure sensitive tapes shall be marked, and mastic containers shall be labeled, in conformance with:
    - UL 181B for flexible metallic and nonmetallic ducts.
    - UL 181A or 181B for rigid metal ducts and components.
      - Exception: Butyl tape without UL 181 markings may be used to seal rigid metal-to-metal connections, per Item 4.
- **Gap Size and Sealing Materials**
  - Sealing materials shall be selected in conformance with Table 20-3.
  - Flexible duct connections with gaps wider than 1/4" shall be replaced with properly-sized duct and/or fitting.
  - For rigid metal ducts, gaps 1" or wider shall be repaired with a sheet metal patch (Item 28) or sleeve.
  - For rigid fiberglass ducts, repairs shall be:
    - Made with duct board or sheet metal and screws, and
    - Sealed with mastic or metallic tape.

TABLE 20-3: GAP SIZE AND APPROVED SEALING MATERIALS

GAP SIZE	FLEXIBLE METALLIC & NONMETALLIC DUCTS		RIGID METAL & FIBERGLASS DUCT	
	Sealing with MASTIC	Sealing with TAPE	Sealing with MASTIC	Sealing with TAPE
≤ 1/4"	Mastic	Tape	Mastic	Tape
> 1/4" - < 1"	Repair Required*	Repair Required*	Mastic & Mesh	Mastic over Tape
1" or more	Repair Required*	Repair Required*	Metal Patch or Sleeve & Mastic	Metal Patch or Sleeve & Tape

***Duct and/or fitting must be replaced with proper size.**

19. DUCT CLOSURE SYSTEMS (continued)

- **Externally-Applied Closure Systems**
  - Sealing materials shall:
    - Be centered over the joint or gap, and
    - Extend at least 1" onto each of the two joined/sealed surfaces.
- **Internally-Placed Mastic Sealant (Core-to-Fitting Joints)**
  - Mastic may be applied either:
    - Inside the duct core, <u>or</u>
    - Onto the rigid component over which the core is attached.
  - Mastic coating shall be at least 1/8" thick and 2" wide.
- **Sealing with Mastic and with Pressure Sensitive Tape**
  - Mastic and Fiberglass Mesh Tape
    - Mastic and mesh shall be installed as prescribed in Item 20.
  - Pressure Sensitive Tapes
    - Tape shall be installed as prescribed in Item 21.

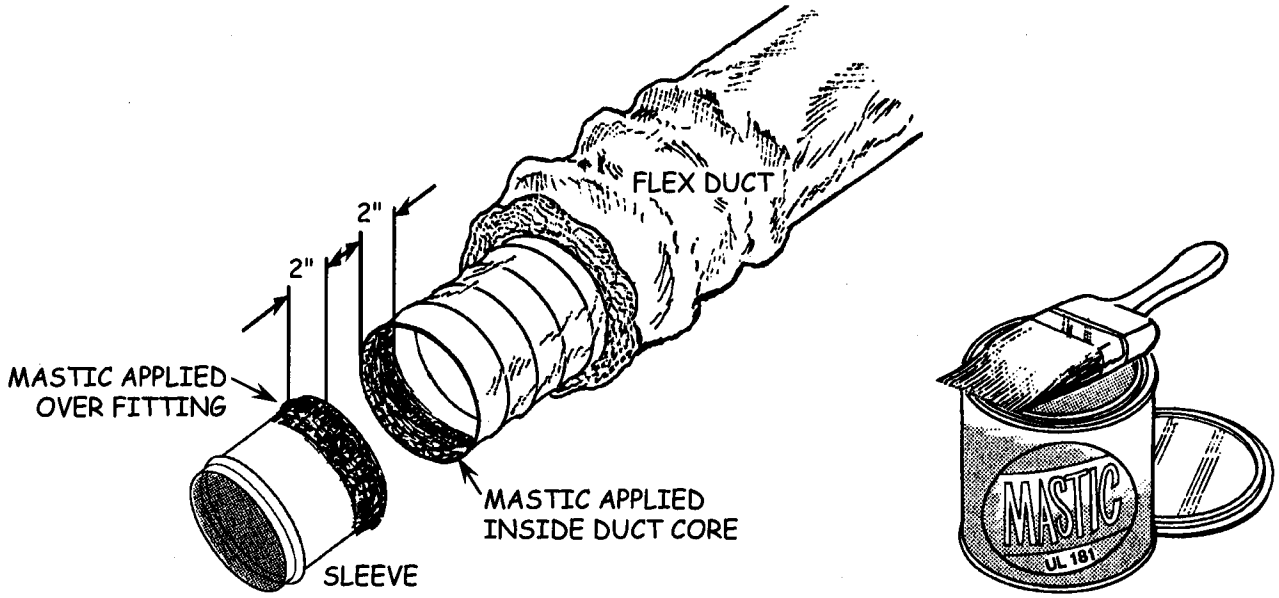

20. SEALING WITH MASTIC

- **Mastic shall be applied as prescribed by manufacturer, including:**
  - Surface preparation/cleaning.
  - Temperature and moisture limitations.
  - Thickness and set-up time.
- **Rigid Metal and Fiberglass Ducts and Components**
  - Mastic by itself may be used to seal gaps up to 1/4".
  - Mastic shall be reinforced with fiberglass mesh tape when used to seal gaps larger than 1/4".
  - Gaps 1" or wider shall be repaired and sealed:
    - Metal ducts per Item 28.
    - Fiberglass ducts repaired with fiberglass duct board or sheet metal and screws, and sealed with mastic or metallic tape.
- **Flexible Metallic and Nonmetallic Ducts**
  - Mastic used to seal core-to-fitting connections may be:
    - Externally applied over the duct core and rigid fitting, <u>or</u>
    - Internally placed between the core and the fitting.
  - Externally-Applied Mastic
    - Mastic shall be reinforced with fiberglass mesh tape when mastic is used to seal the jacket (vapor barrier).
    - When a gap greater than 1/4" exists between the duct core and the fitting (starting collar, coupling, elbow, wye, etc.), duct and/or fitting must be replaced with the proper size (see Item 19).

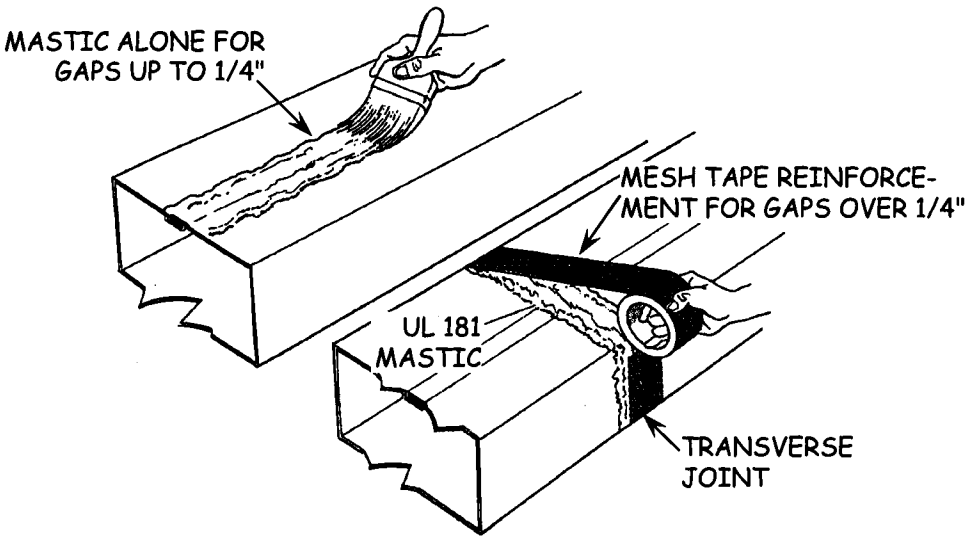

20. SEALING WITH MASTIC (continued)

- **Reinforcement of Mastic with Fiberglass Mesh Tape**
  - Mesh fabric shall be imbedded between two layers of duct mastic to form a mastic closure system.
    - The first layer of mastic shall:
      - Be centered over the joint or gap to be sealed.
      - Extend at least 1" onto each of the joined surfaces.
      - Extend beyond the width of the mesh.
    - The mesh fabric shall be:
      - Embedded in the mastic.
      - Applied at least one layer thick over the entire joint or gap.
      - Wrapped around the entire circumference on transverse joints (e.g., where two sections of duct are joined together).
    - A second layer of mastic shall be installed over the mesh, filling the scrim pattern completely and covering the mesh.

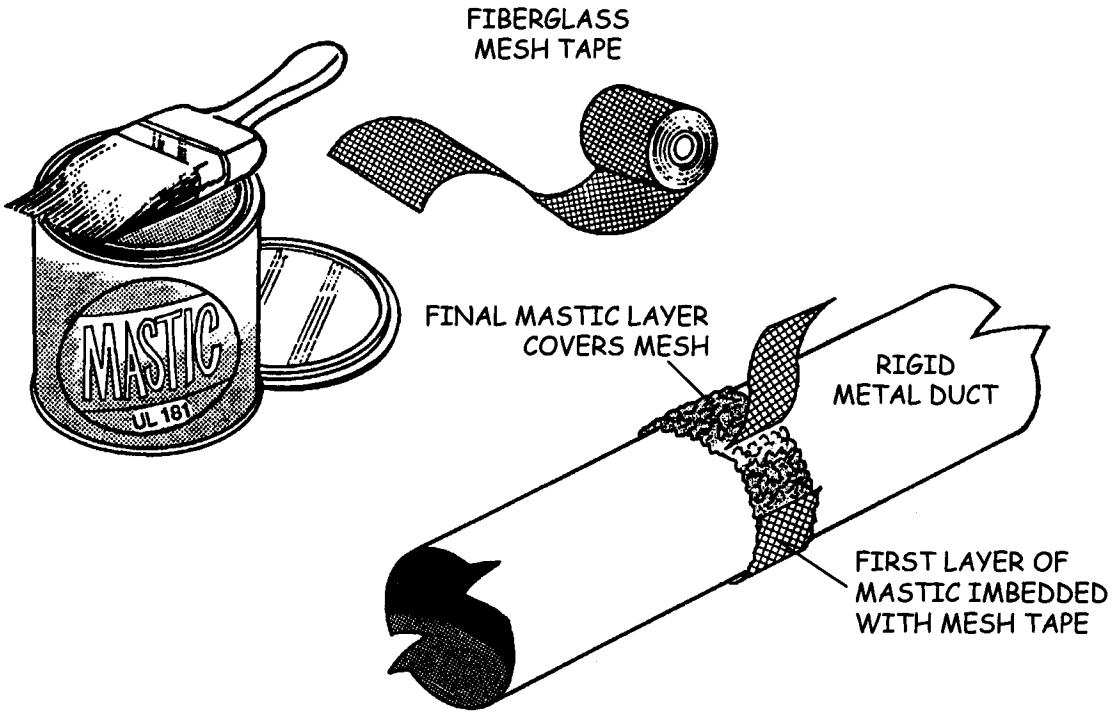

21. SEALING WITH PRESSURE SENSITIVE TAPE

- **All Pressure Sensitive Tapes**
  - Tapes shall be installed as prescribed by manufacturer, including:
    - Surface preparation/cleaning.
    - Application of pressure/rubbing.
    - Temperature and moisture limitations.
  - Successive wraps of tape shall be staggered and should overlap by 50 to 75% of the tape width.
  - At least 3 wraps of tape shall be applied when sealing:
    - Transverse joints at splices and connections in round or rectangular metal ducts.
    - Flexible duct core-to-fitting attachments (with a drawband also installed to secure the core).
    - Jacket (vapor barrier) splices on flexible ducts.
  - When gaps over 1/4" up to <1" wide are sealed with tape:
    - Tape shall be applied as prescribed above and then covered with duct mastic.
    - The mastic shall be applied at least 1/8" thick over the installed tape to provide additional strength and durability.
    - Mastic shall extend beyond the width of the tape.
  - Gaps 1" or wider shall be repaired and sealed per Item 19.

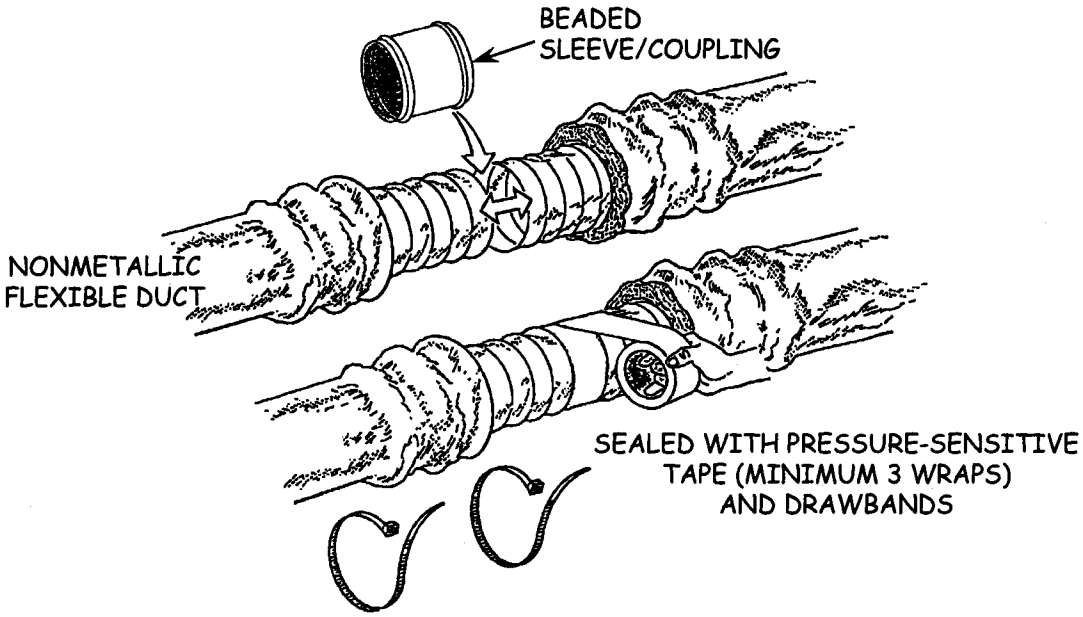

21. SEALING WITH PRESSURE SENSITIVE TAPE (continued)

- **Tapes for Rigid Metal Connections**
  - Metallic pressure sensitive tapes shall be used.
- **Tapes for High Temperature Applications**
  - Metallic pressure sensitive tape with a service temperature rating of at least 265°F shall be used when sealing:
    - Within 1" of a double-wall gas flue/vent pipe.
    - Within 6" of a single-wall gas flue/vent pipe.

22. SEALING REFRIGERANT LINES

- **Sealant**
  - Cork tape shall be used for sealing gaps where refrigerant lines penetrate the coil box/plenum.

23. SEALING REMOVABLE SERVICE PANELS

- **Sealant**
  - UL 181A or 181B metallic pressure sensitive tape with non-butyl (e.g., acrylic) adhesive shall be used to seal service panels, filter access covers, etc.

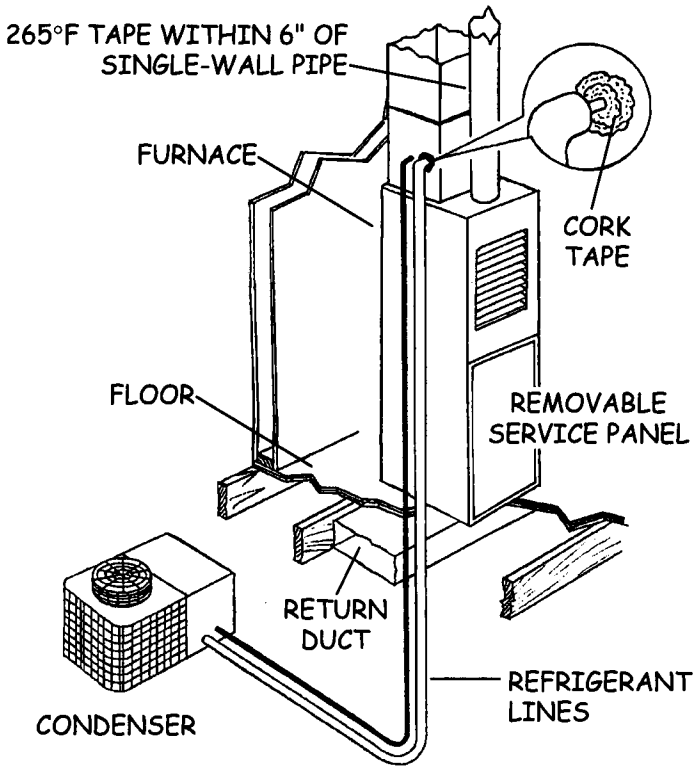

24. REPAIRING AND SEALING FLEXIBLE NONMETALLIC DUCTS

- **Beaded Fittings—Mastic Sealants**
  - A uniform coat of mastic is applied to the outside of the fitting.
  - At least 2" of duct core is pulled onto the fitting, with at least 1" extending past the bead.
  - A drawband (or metal clamp) is installed behind the bead.
  - Mastic is applied externally as needed to ensure a complete seal.
- **Beaded Fittings—Pressure Sensitive Tapes**
  - At least 2" of duct core is pulled onto the fitting, with at least 1" extending past the bead. (Fitting must provide additional 1" surface beyond duct core for application of tape.)
  - A drawband (or metal clamp) is installed behind the bead.
  - Connection is sealed with at least 3 staggered wraps of tape applied uniformly over both the core and the fitting.
- **Non-Beaded Pre-existing Fittings—All Sealants**
  - The duct core is secured to the fitting with internally-placed mastic and a drawband, or
  - The duct core's wire coil is secured to the fitting with evenly-spaced #8 sheet metal screws that capture the wire.
    - Screws must penetrate "181B-FX" pressure sensitive tape applied over the duct core to protect it from tearing.
    - 3 screws for diameters up to 12"; 5 screws for diameters over 12".
  - The connection is sealed with duct mastic or 3 staggered wraps of pressure sensitive tape.
- **Core Repairs**
  - Holes/damage in the duct core shall be repaired by removal of the damaged section and insertion of a sleeve/coupling.

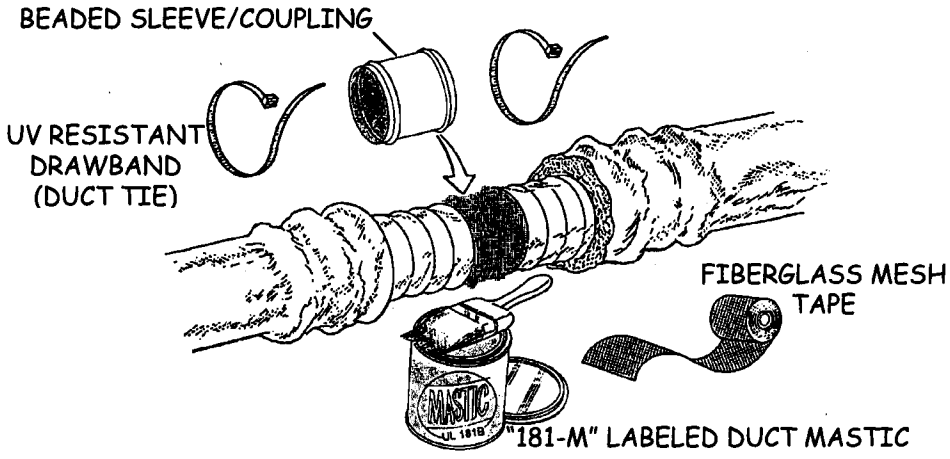

25. REPAIRING AND SEALING FLEXIBLE METALLIC DUCTS

- **Factory-installed Sleeve Present**
  - Connection shall be secured and sealed, like rigid metal ducts, per Item 27.
- **Factory-installed Sleeve Not Present**
  - The end of the core shall be trimmed squarely, then secured and sealed as described below.
  - Sealing with Mastic
    - A uniform coat of mastic is applied to outside of the fitting.
    - At least 1" of the duct core is pulled over the fitting and secured with screws (see below).
    - Mastic is applied externally as needed to ensure a complete seal.
  - Sealing with Pressure Sensitive Tape
    - At least 1" of duct core is pulled over the fitting and secured with screws (see below).
    - Fitting must provide additional 1" surface beyond duct core.
    - Connection is sealed with at least 3 staggered wraps of tape applied uniformly over both the core and the fitting.
  - Installation of Screws
    - The core is secured to the fitting with #8 sheet metal screws positioned at least 1/2" from the end of the core.
    - Screws are equally spaced.
      - 3 screws for duct diameters under 12".
      - 5 screws for diameters 12" and over.
- **Core Repairs**
  - Holes/damage in the duct core shall be repaired by removal of the damaged section and insertion of a sleeve/coupling.

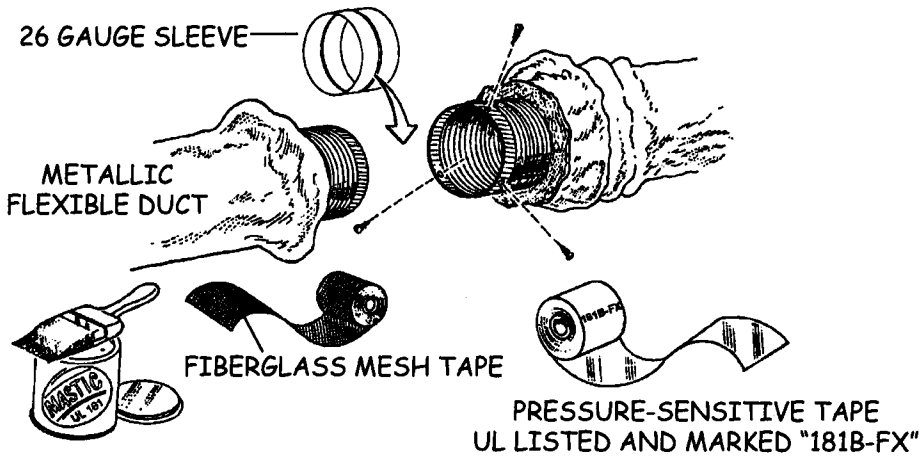

26. FLEXIBLE DUCT INSULATION AND JACKET

- **Insulation shall completely cover the duct core and fitting.**
- **Jacket (Vapor Barrier)**
  - The jacket shall be pulled back over the insulation.
    - The jackets shall overlap at least 2" at splices.
    - Jackets shall be secured/sealed with a drawband and/or 3 staggered wraps of pressure sensitive tape.
- **Jacket Repairs**
  - Rips and holes in the vapor barrier shall be repaired with pressure sensitive tape or with mastic and mesh tape.
  - Ducts with *Air-Permeable* Core:
    - The jackets shall be overlapped at least 2" at splices.
    - Jacket ends at splices and connections shall be secured and sealed with:
      - 3 staggered wraps of minimum 2" pressure sensitive tape, <u>or</u>
      - Mastic applied between the jackets and secured with a drawband.
    - Breaches in the outer vapor barrier shall be sealed with pressure sensitive tape, or mastic and mesh tape.

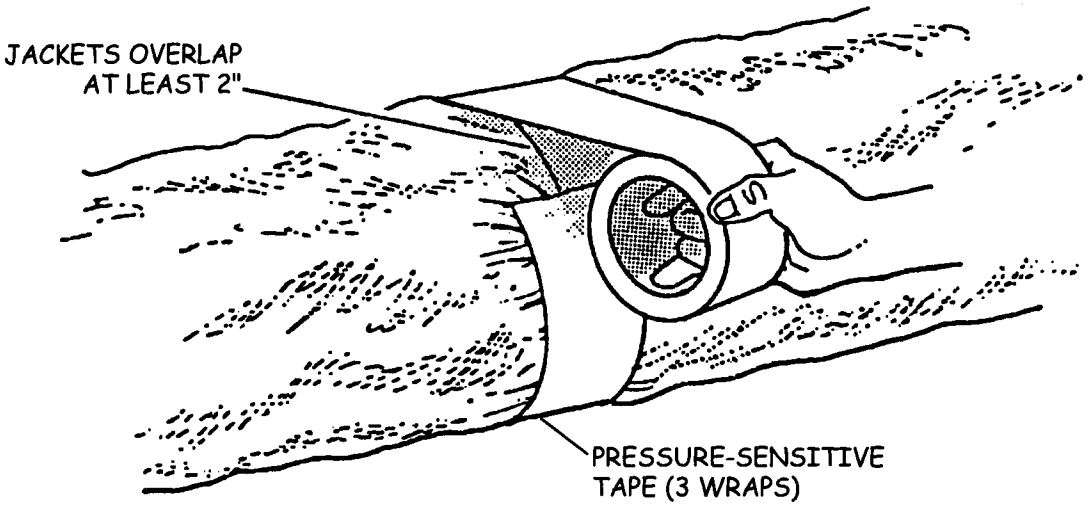

27. REPAIRING AND SEALING RIGID METAL DUCTS

- **Rigid Metal Connection Contact Lap**
  - Crimp joints shall overlap at least 1-1/2" (e.g., connection of duct to fitting, or two sections of duct).
- **Mechanical Fasteners**
  - Rigid metal duct connections shall be secured with equally-spaced #8 sheet metal screws.
  - Round Ducts
    - 3 screws on diameters up to 14".
    - 4 screws on diameters 15" to 19".
    - 5 screws on diameters 20" to 24".
  - Rectangular Ducts
    - At least 1 screw per side.
  - Lapped Seams (Field Fabricated Metal Plenums, etc.)
    - Overlapped surfaces shall be:
      - In substantial contact with each other along the entire seam.
      - Securely fastened together (e.g., with #8 sheet metal screws at intervals of 12" or less).

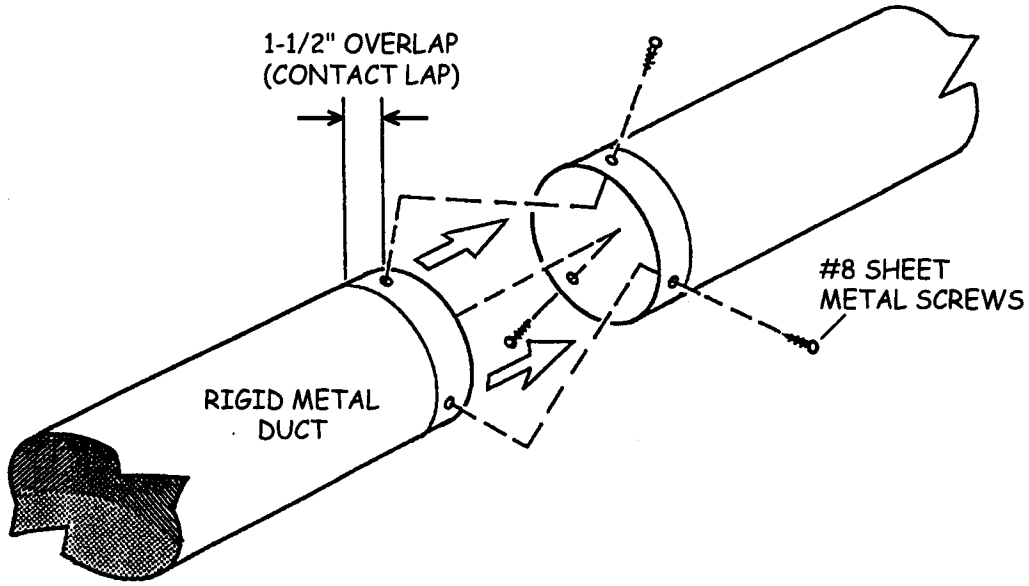

27. REPAIRING AND SEALING RIGID METAL DUCTS (continued)

- **Gaps 1/4" or smaller may be sealed with:**
  - Duct mastic, or
  - Metallic pressure sensitive tape.
- **Gaps over 1/4" up to less than 1" wide shall be sealed with:**
  - Duct mastic with embedded fiberglass mesh, or
  - Metallic pressure sensitive tape covered with mastic.
- **Gaps 1" or wider shall be:**
  - Repaired with a sleeve or a sheet metal patch (per Item 28), and
  - Sealed with mastic or tape.
- **All Connections**
  - Mastic and fiberglass mesh shall be installed per Item 20.
  - Metallic pressure sensitive tapes shall be installed per Item 21.

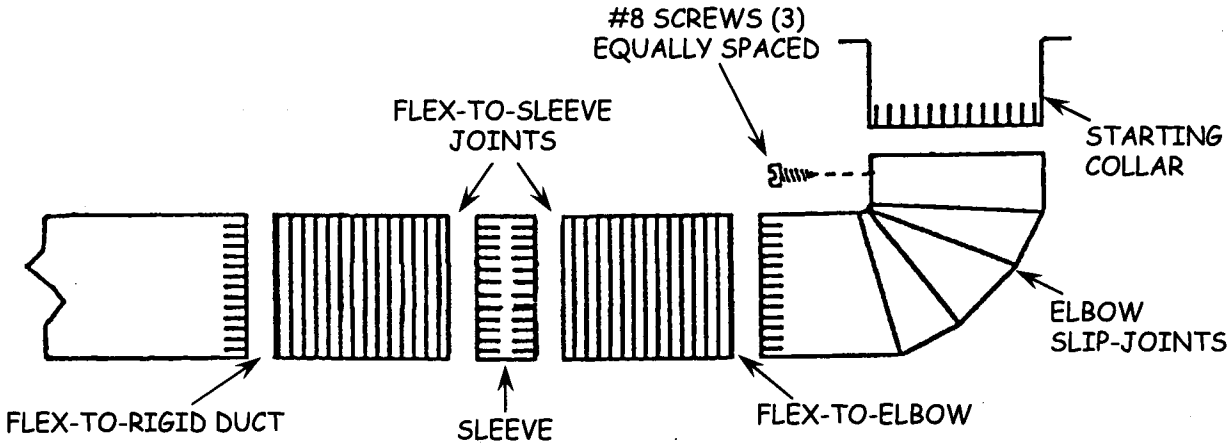

- TAPE OR MASTIC ON GAPS UP TO 1/4"
- MASTIC & MESH, OR METALLIC TAPE COVERED BY MASTIC, ON GAPS OVER 1/4"

28. SHEET METAL PATCHES FOR RIGID METAL DUCTS

- **Material**
  - Patch material shall match the existing duct material (i.e., galvanized patch for galvanized duct, or aluminum patch for aluminum duct).
  - Gauge of the patch shall equal or exceed gauge of the existing duct.
- **Installation**
  - Patch material shall:
    - Extend at least 1" beyond each edge of the gap, and
    - Overlap itself by at least 1".
  - The patch shall be wrapped tightly around the duct and secured with #8 sheet metal screws.
    - Where the patch overlaps itself, at least 1 screw shall be installed on each side of the gap.
    - At least 2 more screws shall be evenly-spaced around the duct on each side of the gap.
- **Sealing**
  - All patch edges/gaps shall be sealed per Item 27.

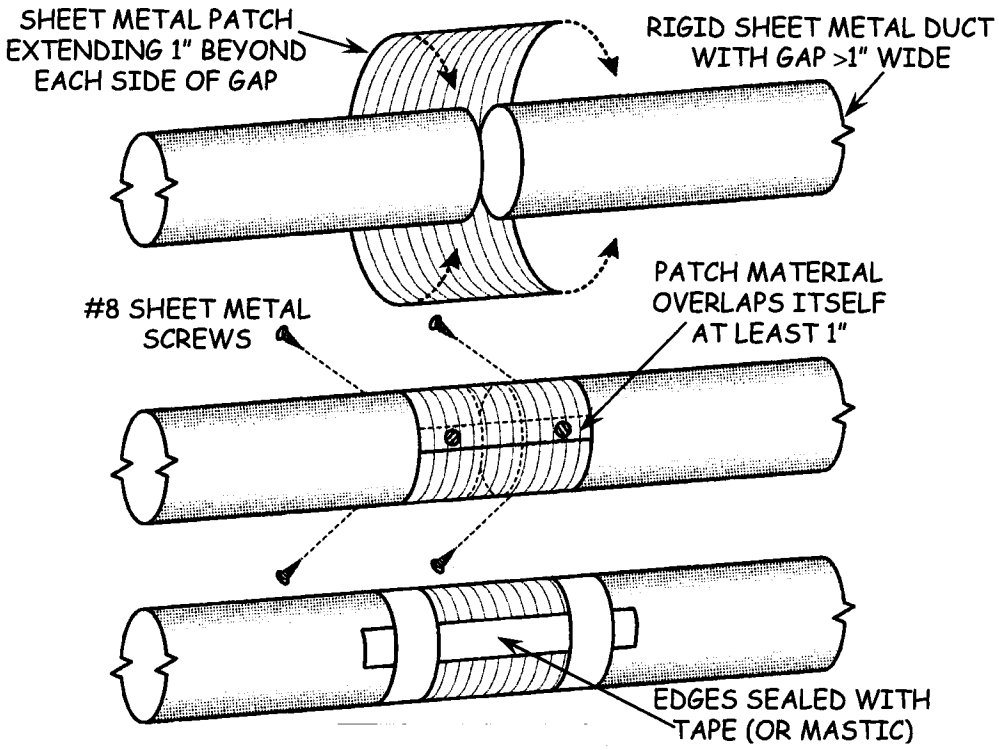

29. SEALING REGISTER BOOTS

- **Boot-to-Duct Connection**
  - Flexible nonmetallic ducts shall be connected and sealed per Items 24 and 26.
  - Flexible metallic ducts shall be connected and sealed per Items 25 and 26.
  - Rigid metal ducts shall be connected and sealed per Item 27.
- **Leaks in the Boot**
  - Gaps 1/4" or smaller may be sealed with:
    - Duct mastic, or
    - Metallic pressure sensitive tape.
  - Gaps over 1/4" up to <1" shall be sealed with:
    - Duct mastic with embedded fiberglass mesh, or
    - Metallic pressure sensitive tape covered by mastic.
  - Gaps up to 3/8" may be sealed with elastomeric caulk.
  - Gaps 1" or wider:
    - Gap shall be repaired with sheet metal and #8 screws, and
    - Sealed as prescribed above for "Leaks in the Boot".
- **Boot Sealing Material**
  - Shall <u>not</u> interfere with removal or reinstallation of register.

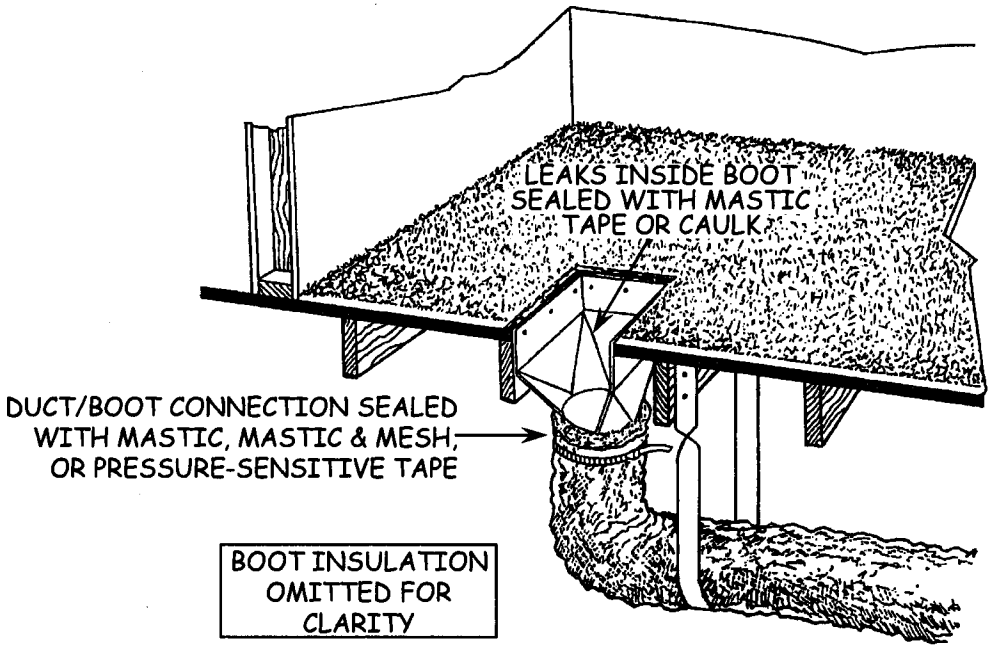

29. SEALING REGISTER BOOTS (continued)

- **Boot-to-Floor/Wall/Ceiling Connection**
  - Boot shall be mechanically secured to the structure and shall not rely on the duct for support or stability.
  - Gaps between boot and surrounding material shall be sealed with one of the following:
    - Elastomeric caulk (gaps up to 3/8").
    - Elastomeric caulk supported by backer rod (gaps 7/16" to 5/8").
    - Duct mastic or metallic pressure sensitive tape (gaps up to 1/4").
    - Duct mastic reinforced with fiberglass mesh, or metallic tape covered with mastic (gaps over 1/4" up to <1").
- **Unhindered Register Removal/Replacement**
  - Sealants applied to the boot shall not interfere with the removal and replacement of the register.
  - Exposed sealant may be covered with metallic pressure sensitive tape to prevent adhesion to the register.

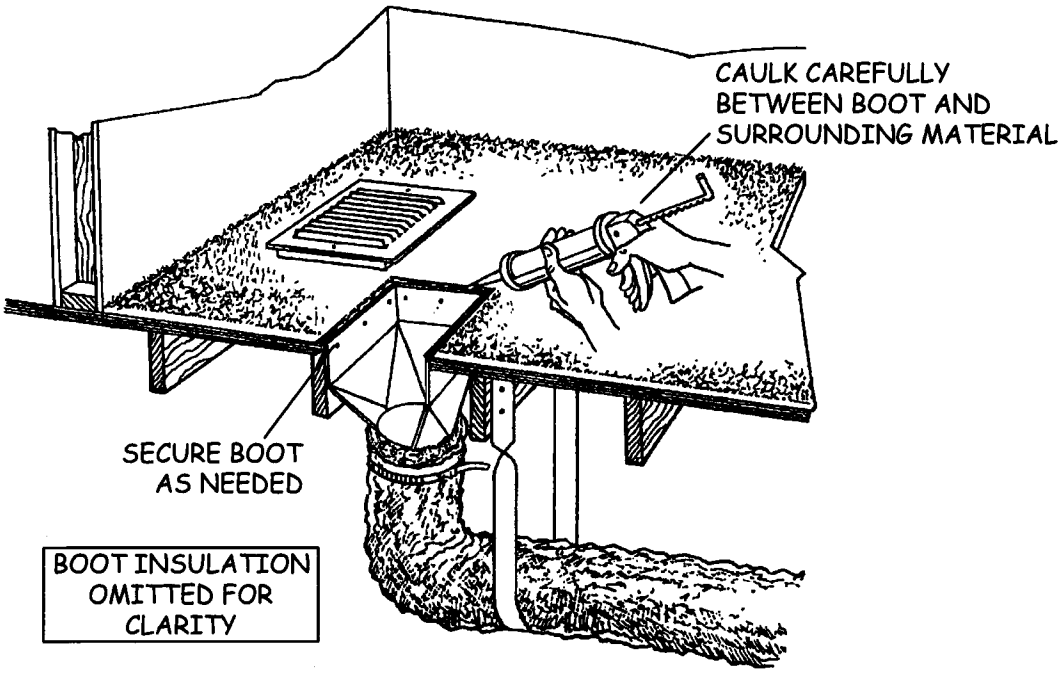

30. SEALING BUILDING CAVITIES

- **Accessible leaks shall be sealed.**
  - Building cavities being used as ducts (e.g., platform return, panned joists, building cavity/chase, cabinet toe-kick supply terminal, etc.) shall be sealed where accessible.
  - Repair/liner materials may include sheet metal and fiberglass duct board.
- **Sealants may include:**
  - Duct mastic alone (gaps up to 1/4").
  - Duct mastic plus fiberglass mesh or metallic tape covered with mastic (gaps larger than 1/4" up to <1").
  - Approved caulk (e.g., elastomeric sealants).
  - Metallic pressure sensitive tape (for metal and foil surfaces).
- **Foam board, foam sealants, and gypsum wallboard shall <u>not</u> be used.**
- **Platform Plenum Insulation**
  - When uninsulated platforms are sealed, they shall also be insulated.
  - Insulation requirement may be met by:
    - Filling stud cavities inside the plenum with flexible insulation, when lining/sealing with sheet metal, <u>or</u>
    - Installing fiberglass duct board to both line/seal and insulate the plenum.

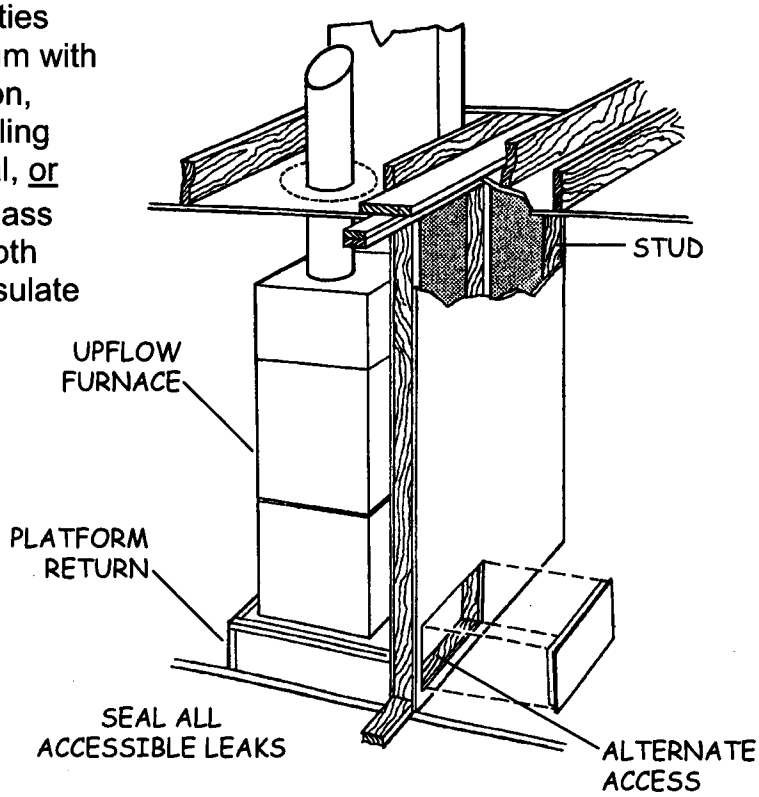

DUCT INSULATION

31. DUCT INSULATION

- **Material**
  - Flexible or rigid fiberglass.
  - Vapor retarder (maximum 0.5 perm facing) required for air conditioning ducts.
- **Minimum R-Values**
  - Natural Gas Heat
    - R-4.2 in CEC climate zones (CZ) 6 – 8.
    - R-6 in CZ 1 – 5 and 9 – 13.
    - R-8 in CZ 14 – 16.
  - Electric Heat: R-8 in all CZ.
- **Coverage**
  - All air ducts, air connectors, plenums, distribution boxes and system components shall be insulated.
    - Insulation is to be installed on portions of the duct system located outside of conditioned space.
    - Rigid metal ducts located entirely within conditioned space may be insulated to prevent condensation.
  - 100% coverage required without gaps or openings.
- **Compression**
  - Maximum 20% overall compression by attachments.
  - Maximum 50% compression in corners/bends.

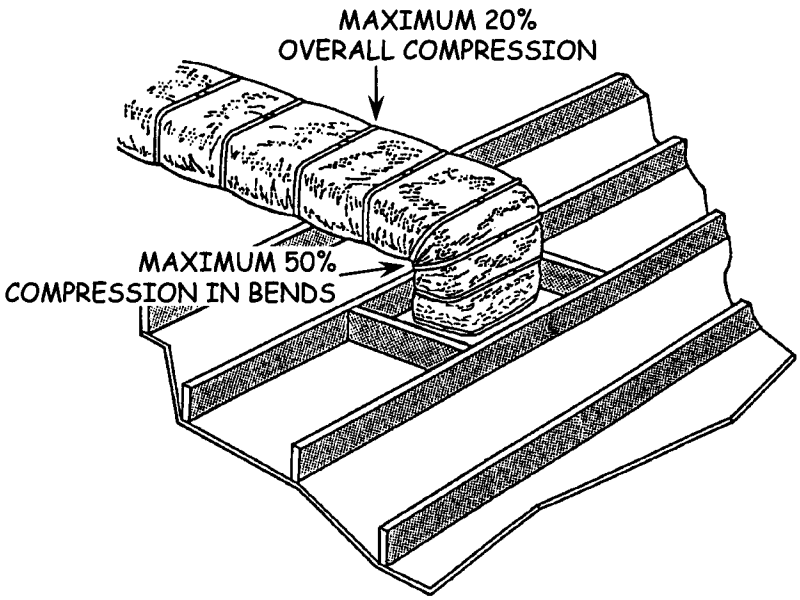

31. DUCT INSULATION (continued)

- **Clearances**
  - Combustion air vents shall not be obstructed by duct insulation.
  - Combustible Facings and Attachments
    - 6" clearance from single wall gas flue/vent pipes.
    - 1" clearance or clearance specified by the listing, whichever is greater, for listed Type B double-wall gas vent pipes.
    - 3" clearance from all other heat producing devices.
- **Attachment of Rigid Fiberglass Insulation**
  - Insulation shall be securely attached (e.g., with stickpins).
  - Seams shall be sealed with:
    - Metallic pressure sensitive tape marked "181A-P", or
    - Duct mastic labeled "181A-M" reinforced with mesh tape.

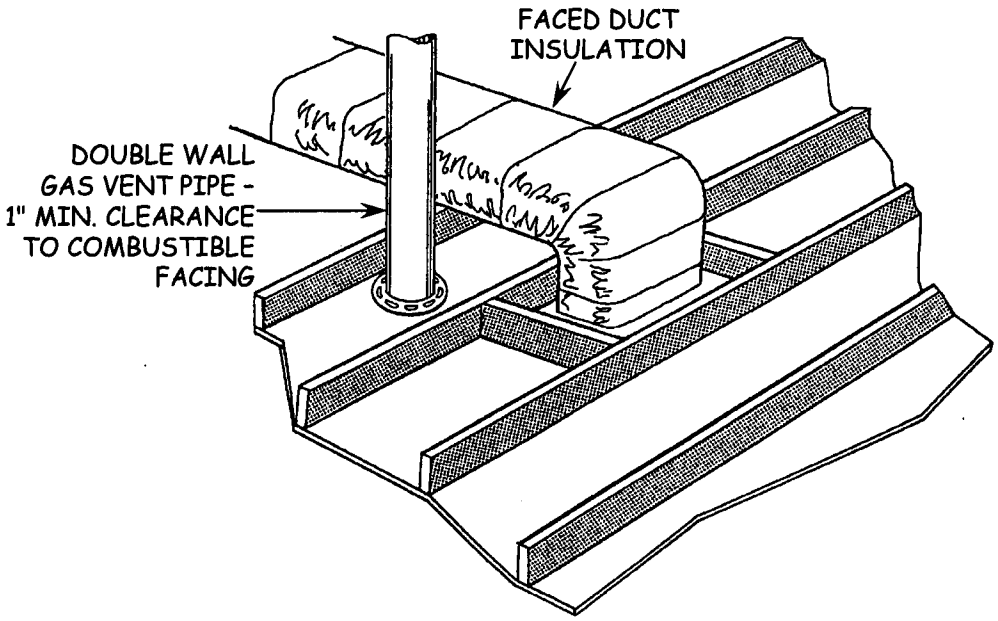

31. DUCT INSULATION (continued)

- **Installation of Flexible Insulation**
  - Insulation shall be permanently secured with one of the following:
    - Drawbands (duct ties).
    - Noncorrosive wire, 20 gage minimum.
    - Rust-resistant nails or staples.
    - Pressure sensitive tape (e.g., metallic or FSK) wrapped a minimum of 3 times around the circumference.
  - Spirally Wrapped
    - Wraps of unfaced insulation shall overlap each other at least 2".
    - Insulation shall be mechanically secured (e.g., with drawbands, wire, nails, or staples) as needed to prevent gaps or openings.
  - Parallel Wrapped
    - Faced wraps shall be secured and sealed with pressure sensitive tape or as prescribed by manufacturer.
    - Unfaced wraps shall be mechanically secured with fasteners (drawbands, wire, nails, or staples) installed no more than 18" apart along the lengthwise seam (overlap) of the insulation.

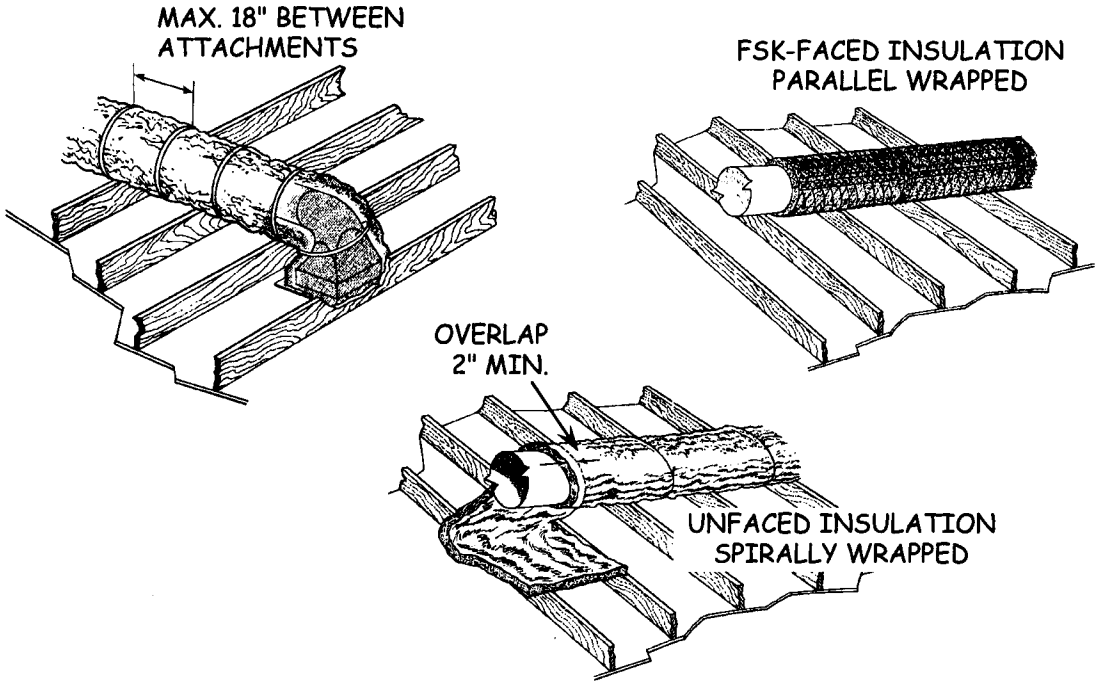

31. DUCT INSULATION (continued)

- **Exposed Ducts**
  - Ducts Located Outdoors or Not Protected from the Elements
    - Ducts shall be insulated with materials which are:
      - Intended for exterior applications.
      - Selected and installed in conformance with manufacturer's instructions and local codes.
  - Ducts Located in Area Subject to Human Contact
    - When fiberglass insulation is installed, it shall be faced.
    - Fiberglass edges shall <u>not</u> be left exposed in the living space.

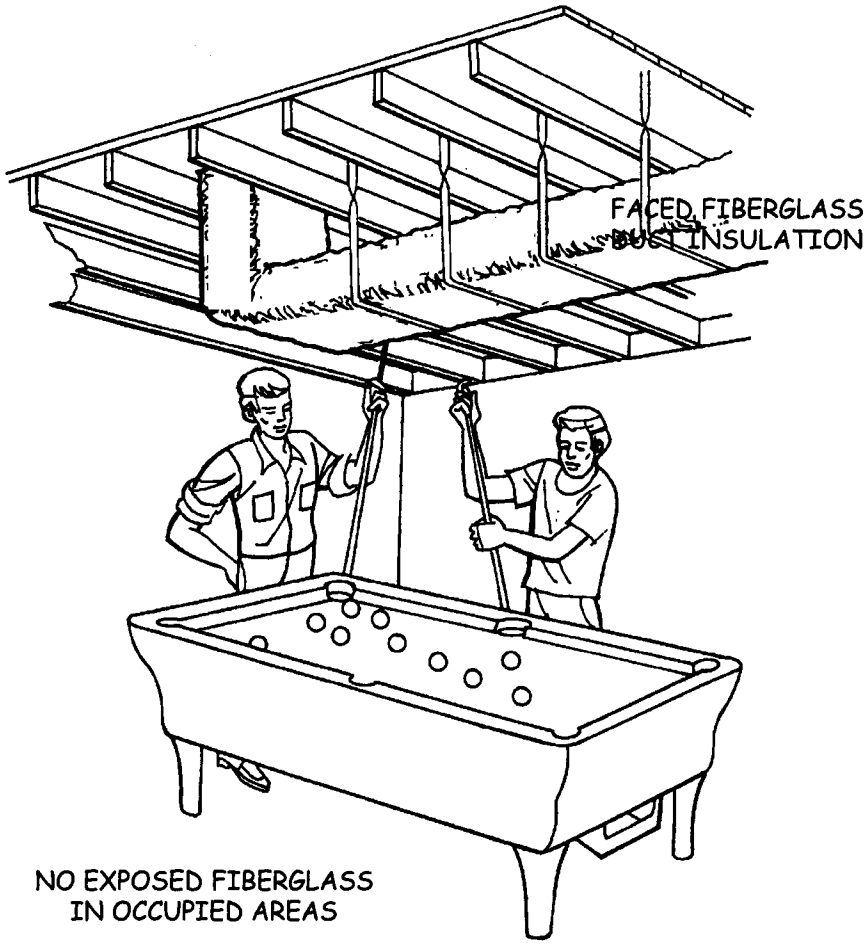

32. LEAD-SAFE WEATHERIZATION

- Lead-safe practices shall be employed when working with pre-1979 painted materials per state codes T8 Section 1532.1 and T17 Section 36000, et seq.

33. POST-INSTALLATION REQUIREMENTS

- Paint dust and chips, scraps, and other debris resulting from weatherization activities shall be cleaned up and removed from the premises—utilizing lead-safe practices when applicable.
- Furniture and other household items moved for weatherization work shall be returned to their original positions.

CALIFORNIA DEPARTMENT OF HEALTH SERVICES Childhood Lead Poison Prevention Program Lead-Related Construction Information Hot-Line 1-800-597-LEAD (1-800-597-5323) www.childlead.com	
NATIONAL LEAD INFORMATION CENTER **1-800-424-LEAD**	
EPA United States Environmental Protection Agency US EPA Region IX 75 Hawthorne St. San Francisco, CA 94105 Region IX Contact: Don Lanier (415) 744-1123	U.S. Department of Housing and Urban Development Office of Lead Hazard Control 451 7th Street, S.W., Room B-133 Washington, DC 20410 PH: 202-755-1785 FAX: 202-755-1000
www.epa.gov/lead/index.html	www.hud.gov/lea/leahome.html

SEE SEPARATE "NONFEASIBILITY CRITERIA" WORD DOCUMENT FOR THE NONFEASIBILITY PAGE TO THIS SECTION

CENTRAL HIGH EFFICIENCY AIR CONDITIONER REPLACEMENT STANDARDS

1. APPROVED MATERIALS

- **All Units**
  - All materials shall be in conformance with the CBC and CMC.
  - Replacement air conditioning systems shall be rated by the Air-Conditioning and Refrigeration Institute (ARI).
  - Programmable thermostat shall be selected and installed as prescribed in Section 23.
- **Package Units (Dual Packs)**
  - Minimum SEER of 13 and EER of 11.5.
- **Split Systems**
  - Minimum SEER of 13 and EER of 11.5 with a Thermostatic Expansion Valve (TXV).
  - The EER shall be determined by the coil match as listed in the current ARI Directory.

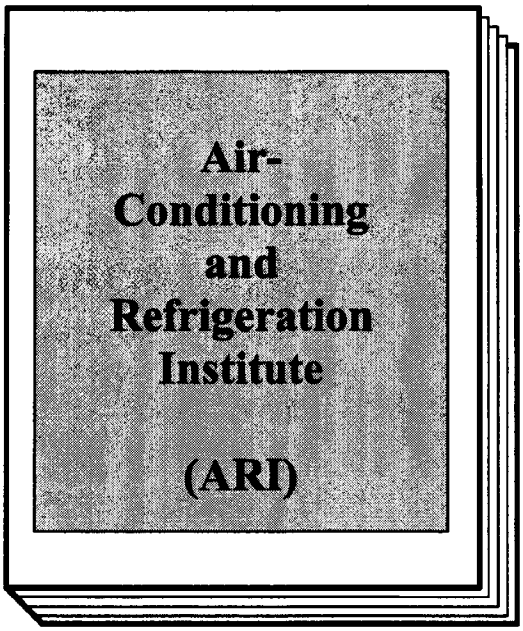

1. **APPROVED MATERIALS (continued)**
   - **Programmable Wall Thermostat**
     - ENERGY STAR® qualified.
     - System powered, not battery powered, on 24 volt systems.
     - Digital with anti-short-cycle feature.
     - Minimum setback capability of 10°F.
     - At least two setback periods per 24 hour day, with change cycle increments being no greater than 30 minutes.
     - Manual override and standard alkaline battery backup or other program saving backup system.
     - Positive on/off switch that is easily accessible.
     - Compatible with the HVAC equipment.
   - **Standard Wall Thermostat**
     - Alternative when customer refuses programmable thermostat.
     - Digital with built in anti-short-cycle feature.
     - Conforms with manufacturer's instructions.
     - Compatible with the HVAC equipment.
     - Includes a positive on/off switch.

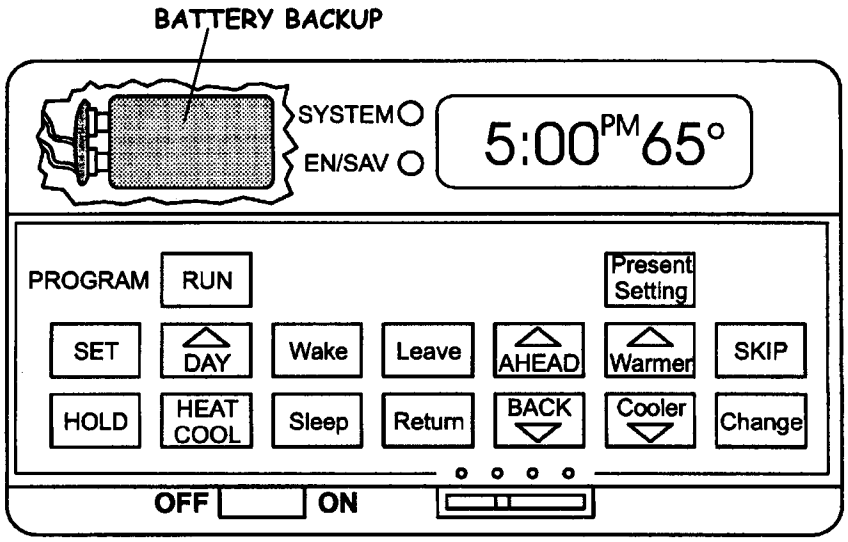

DIGITAL PROGRAMMABLE THERMOSTAT
WITH ON/OFF SWITCH

2. WARRANTY

- **All Installations**
  - Parts and labor shall be covered by a minimum one (1) year written warranty.
  - Compressor warranty shall extend to five (5) years.
  - All written warranty information and manufacturer's operating and maintenance instructions shall be supplied to the customer.

3. GENERAL REQUIREMENTS

- **All Installations**
  - A permit for the installation shall be obtained from and finalized by the local jurisdiction.
  - Installation shall be in compliance with:
    - Manufacturer's instructions and specifications.
    - Currently adopted California Electrical Code (CEC).
    - Currently adopted California Mechanical Code (CMC).
    - Local building code and regulations regarding seismic precautions, zoning, noise abatement, access, etc.
- **Air Filters**
  - All air filters shall be installed and clean.
  - Unframed washable filters shall be properly supported to prevent being drawn into the air handler, as prescribed in Section 18.

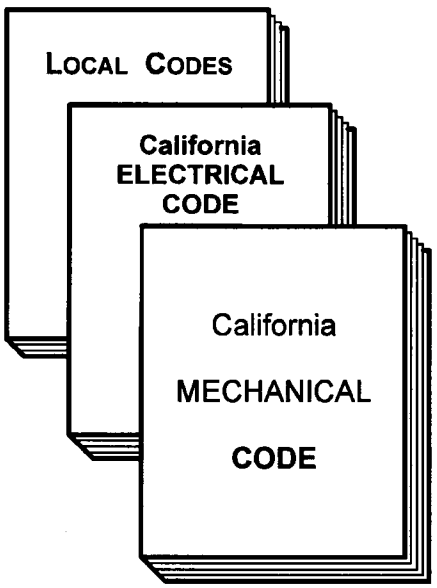

4. SIZING CRITERIA

- **System Size**
  - Unit shall be sized in accordance with Title 24 or local code, whichever is more stringent.
  - The tonnage of the new system should be equal to or smaller than the existing system.
- **Refrigerant Lines**
  - Shall be properly sized per manufacturer's specifications.
  - Shall provide the rated EER for the combination condenser and evaporator coil match.

5. EVAPORATOR (INDOOR) COIL AND CONDENSER (OUTDOOR) COIL

- **Split Systems**
  - An evaporator coil shall be installed which is verified to be a rated match with the condenser unit, as listed in current ARI Directory.
  - The coil label shall be visible.
  - Condenser coil and evaporator coil shall be verified to function properly.
  - An access panel shall be provided for cleaning.
- **Evaporator Coil Replacement**
  - Prior to charging, vacuum shall be drawn on the refrigerant lines to test for leaks and remove water vapor.
  - Depth of vacuum and length of time shall be as specified by the manufacturer.

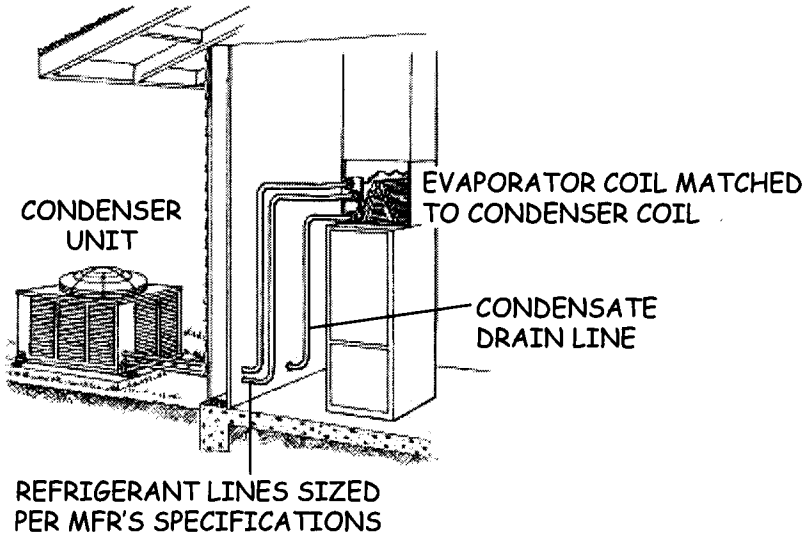

6. OPERATIONAL REQUIREMENTS

- **Air Flow**
  - Air flow through the indoor coil shall be adequate to meet manufacturer's specifications.
- **Programmable Thermostat Control**
  - A new programmable thermostat shall be installed in accordance with Section 18.
  - Thermostat shall be tested and verified to operate properly per manufacturer's instructions.
- **Refrigerant System Charging**
  - Refrigerant system shall be properly charged using methods specified by the manufacturer.
  - Refrigerant recovery shall be performed in accordance with Federal law.
    - A recovery device shall be used.
    - Ventilation to the atmosphere is not allowed.
  - Technicians performing evacuation and charging must have EPA-approved certification as a Type II or Universal technician.

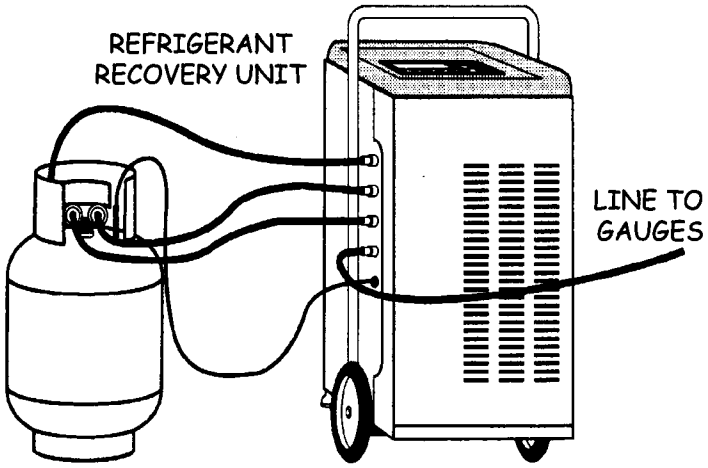

7. AIR DISTRIBUTION SYSTEM

- **All Units**
  - Distribution system shall be in conformance with HVAC manufacturer's specifications.
- **Retrofit Units Utilizing Existing Duct System**
  - Duct system shall be examined for leaks and disconnections and brought into conformance with Title 24 requirements, in accordance with the program Policy and Procedures.
  - Testing shall be performed in accordance with WIS Section 10, Duct Testing Standards, and repairs and sealing shall be made in accordance with WIS Section 20, Duct Sealing Standards.
  - The supply and return plenums shall be securely attached to the air handler.
  - The supply and return ductwork shall be securely attached to the respective plenums.
- **New Ductwork**
  - The new duct system shall be installed in conformance with manufacturer's instructions.

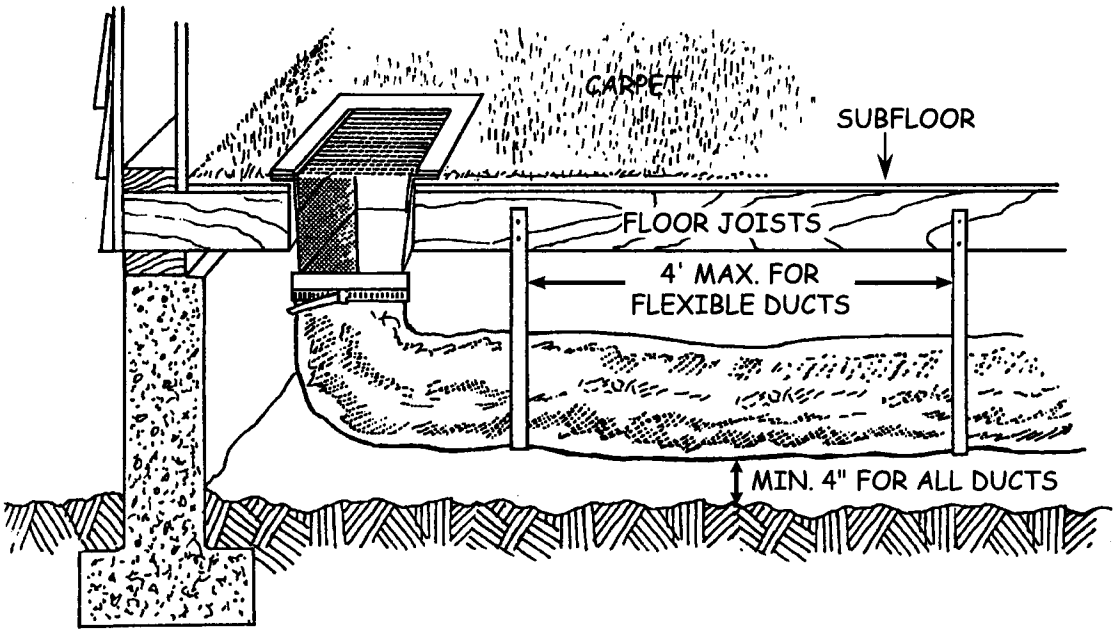

8. ELECTRICAL ACCESSIBILITY AND GROUNDING

- **All Equipment Installations**
  - Access and working space shall be provided in conformance with CEC Section 110-16 and local code.
- **Open Space for Panels and Equipment**
  - An open space shall be provided around electrical panels and equipment requiring servicing, which shall be minimum 30" wide by 36" deep or as specified by local jurisdiction.
- **Accessibility for Equipment**
  - The air-conditioning equipment shall be accessible for inspection, service, repair and replacement without removing permanent construction (per CMC Section 1106.3).
  - Minimum clearance between air-conditioning equipment and the adjacent structure/wall/obstruction shall be:
    - 36" on side(s) containing service access panels, and
    - 12" on all other sides, <u>or</u>
    - As specified by manufacturer and local jurisdiction.
    - <u>*Exception*</u>: Other clearances allowed when variance is granted by building department.

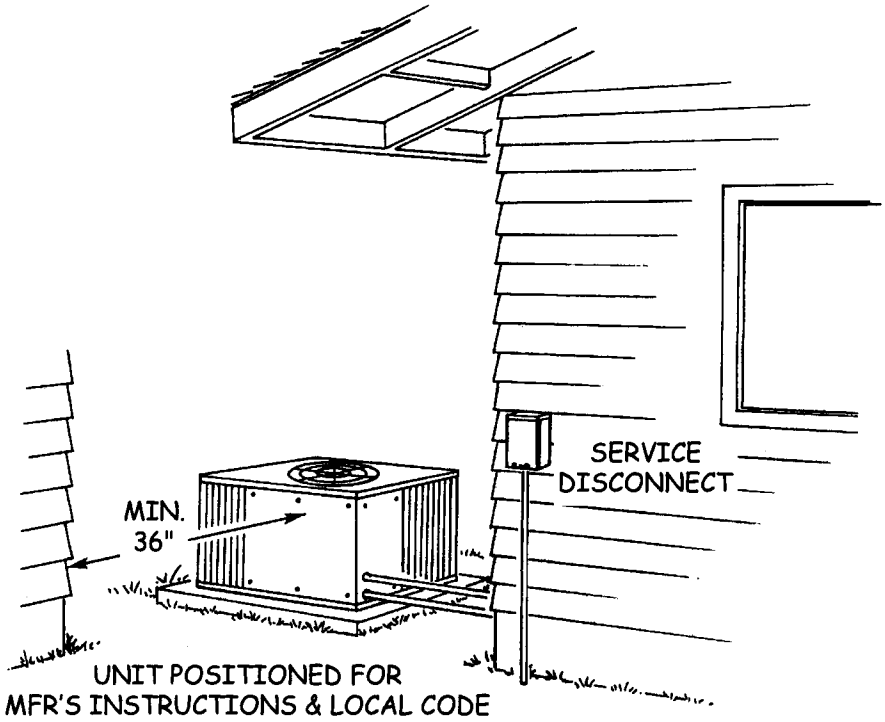

8. ELECTRICAL ACCESSIBILITY AND GROUNDING (continued)

- **Service Receptacle**
  - A 120-volt service receptacle shall:
    - Be located within 25' of the equipment.
    - Be on the same level as the equipment.
    - Not be connected on the load side of the disconnect.
- **Grounding**
  - Exposed noncurrent-carrying metal parts shall be grounded in compliance with CEC Article 250, Part J., Grounding Conductors (Sections 250-91 through 250-99), and Part K., Grounding Conductor Connections (Sections 250-112 through 250-119).
  - Parts of the equipment capable of carrying electrical current shall be grounded to the service ground by a continuous:
    - metal raceway,
    - wire, or
    - appropriate conductor in a cable assembly.
  - Connections and splices in the grounding conductor shall:
    - Be made in compliance with the CEC.
    - Provide a continuous path to the service ground with all disconnects and controllers in the open position.

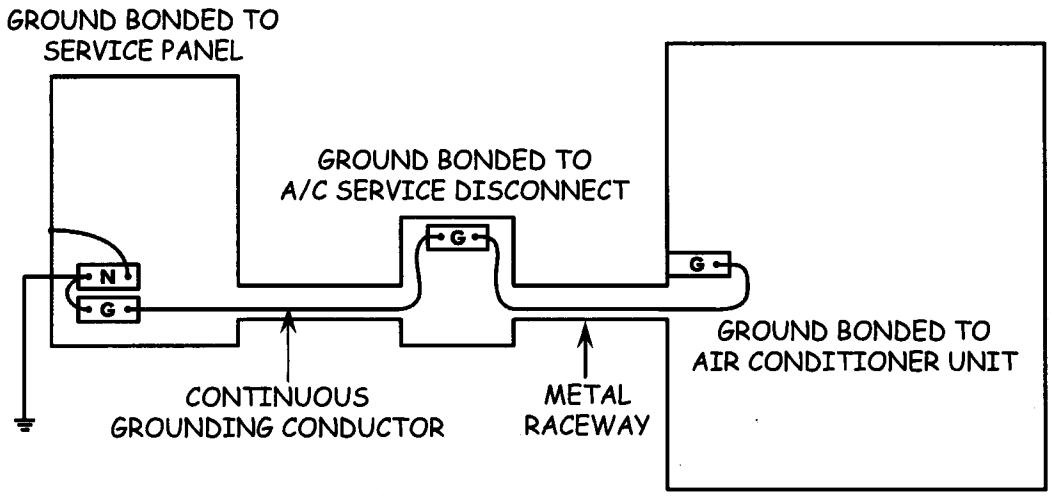

CONTINUOUS GROUNDING PATH FROM SERVICE PANEL
TO A/C UNIT PROVIDED BY CONDUCTOR OR RACEWAY

9. BRANCH-CIRCUIT PROTECTION

- **General Requirements**
  - Air-conditioning equipment shall be provided with:
    - Overcurrent protection per CEC Article 240.
    - Disconnecting means per CEC Article 440, Part B.
    - Branch-circuit short-circuit and ground-fault protection per CEC Article 440, Part C.
- **Protection Device Type**
  - The overcurrent protection device shall be the type specified on the air-conditioning equipment nameplate (see Table 21-1).
  - When nameplate specifies an HACR circuit breaker, the installed circuit breaker shall be listed and labeled HACR type (suitable for use with heating, air-conditioning and refrigeration equipment).
- **Protection Device Rating**
  - The branch-circuit protection device shall not exceed the maximum amperage rating specified on the nameplate of the air-conditioning unit.

TABLE 21-1: OVERCURRENT PROTECTION SELECTION GUIDE

HEAT PUMP UNIT NAMEPLATE MARKED:	OVERCURRENT PROTECTION DEVICE* MUST BE:
"Maximum Fuse Size _X_ Amps"	An _X_ Amp Fuse
"Maximum Fuse or HACR Circuit Breaker _X_ Amps"	An _X_ Amp Fuse or HACR-Type Circuit Breaker
"Maximum Fuse, HACR Circuit Breaker, or Circuit Breaker _X_ Amps"	An _X_ Amp Fuse, HACR-Type Circuit Breaker, or Standard Circuit Breaker
"Maximum Overcurrent Protection Device _X_ Amps"	An _X_ Amp Fuse, HACR-Type Circuit Breaker, or Standard Circuit Breaker

***Amperage rating of the device must not exceed that specified on the nameplate.**

10. BRANCH CIRCUIT CONDUCTORS

- **Ampacity and Rating of Conductors**
  - Minimum wire size shall, as applicable, be:
    - Selected from CEC Tables 310-16 through 310-19, or
    - Calculated in accordance with CEC Section 310-15.
- **Voltage Drop and Wire Length**
  - Circuits shall be installed in conformance with CEC Section 210, Branch Circuits, and Section 215, Feeders.
  - The voltage drop over the branch-circuit conductor should not exceed 3%. (See CEC Section 210-19(a) (Fine Print Note No. 4).)
  - In 240v circuits, the maximum conductor length should not exceed the values given in Table 21-2.

TABLE 21-2: MAXIMUM LENGTH OF CIRCUIT (IN FEET)

WIRE SIZE	AMPACITY OF CIRCUIT			
AWG	15	20	30	40
12	160'	120'	–	–
10	250'	190'	130'	–
8	300'	225'	150'	115'

Notes:

- **The table is based on a 4.6v drop (230v X 2% = 4.6v).**
- **The table applies to non-plated (uncoated) solid wire copper conductors at 75°C (167°F) ambient temperature.**
- **For alternate conditions or conductors, use applicable CEC Tables (e.g., see Article 210, "Branch Circuits"; Article 215, "Feeders"; and Chapter 9, Table 8, "Conductor Properties").**

11. UNIT DISCONNECTING MEANS (SERVICE DISCONNECT)

- **All Installations**
  - A disconnecting means, which is capable of disconnecting the air-conditioning equipment from the circuit feeder shall be installed in conformance with CEC Article 440, Part B, Disconnecting Means.
- **Location**
  - The service disconnect:
    - Shall be located within sight from, and readily accessible from the air-conditioning equipment, or as required by the local jurisdiction.
    - May be installed on or within the air-conditioning equipment.
- **Rating**
  - The rating of the disconnecting means shall <u>not</u> exceed the over-current rating of the installed equipment.
  - The rating of the installed fuses or circuit breakers shall <u>not</u> exceed:
    - The overcurrent rating of the installed air conditioning equipment.
    - The rating of the box in which they are located.

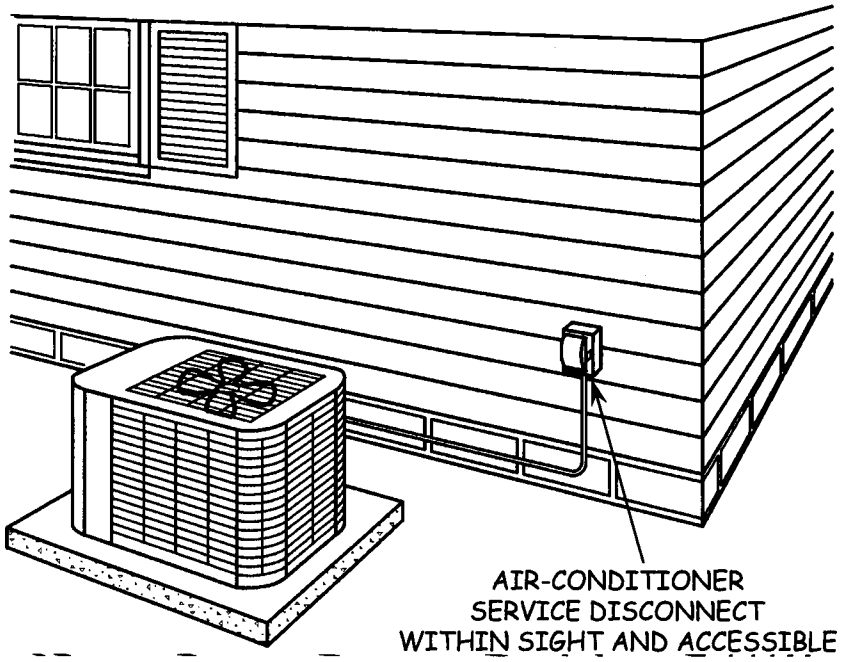

12. MOUNTING OF EQUIPMENT

- **Roof Mount**
  - The roof shall be structurally adequate to properly support the installed equipment in conformance with CBC and local code.
  - Design and installation of support frame or curb and installation of air-conditioning equipment and applicable safety apparatus shall be in conformance with manufacturer's instructions and local code.
  - Curb base and exposed roof penetrations shall be properly installed, flashed and sealed watertight.
  - The condensate drain line shall be:
    - Equipped with a trap.
    - Painted to resist UV degradation if PVC is used.
  - Roofing materials shall be in good condition and not in need of repair or replacement.

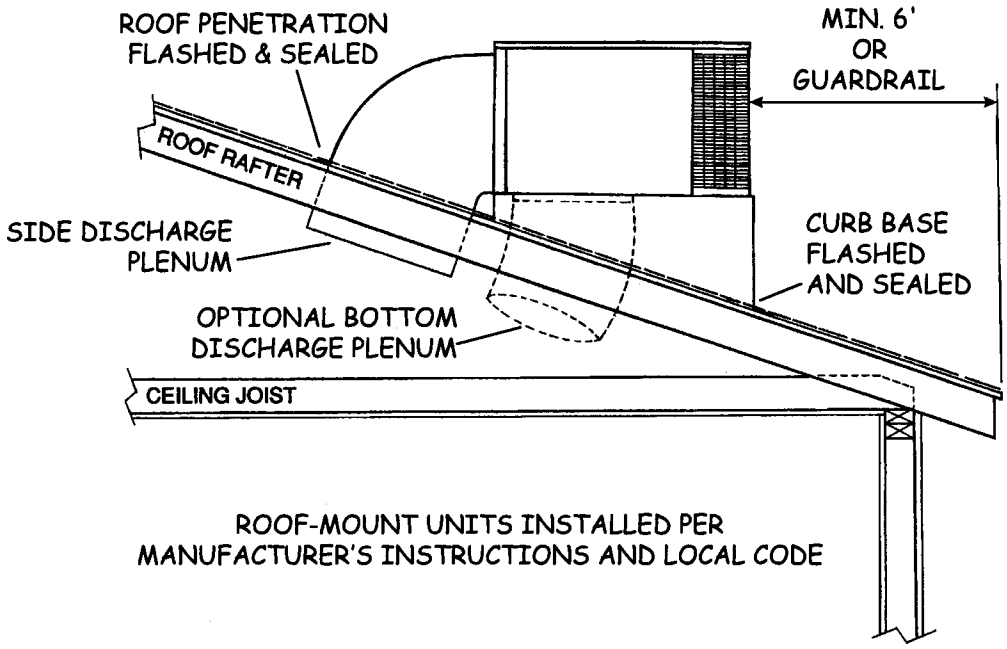

12. MOUNTING OF EQUIPMENT (continued)

- **Ground Mount**
  - Air-conditioning equipment shall be installed in conformance with CMC Section 1106.0.
  - The unit shall rest on concrete or other approved base extending at least 3" above the adjoining ground level.
- **Protection**
  - Units subject to mechanical damage shall be protected in conformance with CMC Section 308.
  - Unit shall be attached to base with seismic straps, when required by local code.
- **Overhead Clearance**
  - Overhead clearance shall be provided in conformance with manufacturer's specifications and local code.

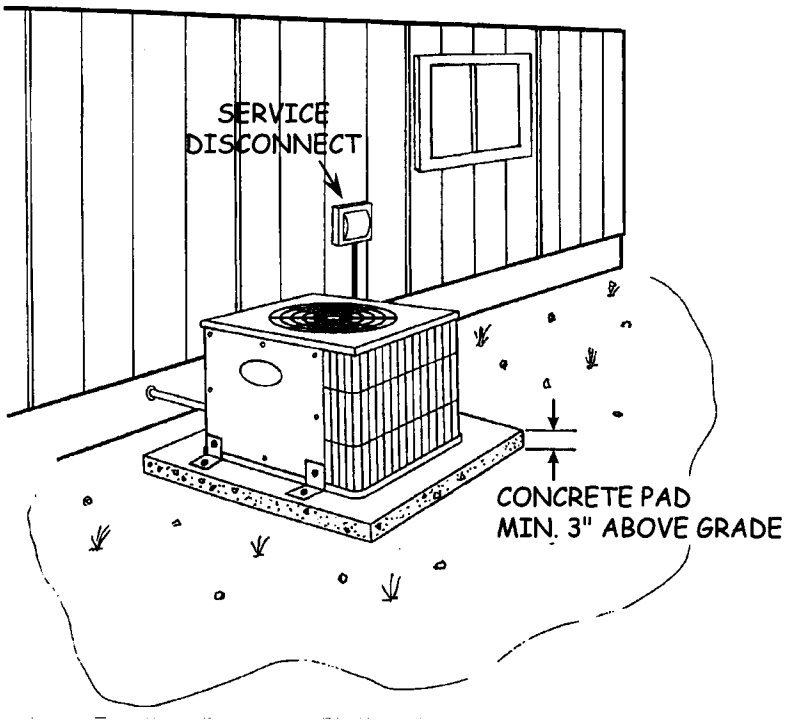

13. FUEL-GAS PIPING

- **All Installations**
  - Gas lines, fittings and valves shall be free of leaks.
  - New lines shall be pressure-tested.

14. FLUE AND VENT SYSTEMS

- **All Installations**
  - New flue/vent system shall be selected, installed and secured in conformance with listing specifications, manufacturer's instructions and local code.
- **Appliances Sharing a Common Vent**
  - When an existing furnace that shares a common vent with another appliance is replaced with a new unit utilizing either a common or separate vent system, contractor shall ensure that both appliances vent properly.

15. COMBUSTION AIR

- **Fuel-Burning Appliances**
  - Combustion air for installed units shall be supplied in conformance with manufacturer's instructions and local code.
  - Combustion air supply for all other appliances sharing the same space/enclosure shall comply with local code.
  - Combustion air vents shall be free of obstructions (e.g., overblown ceiling insulation, duct insulation, etc.) which interfere with proper venting.

ELECTRONIC LEAK DETECTOR

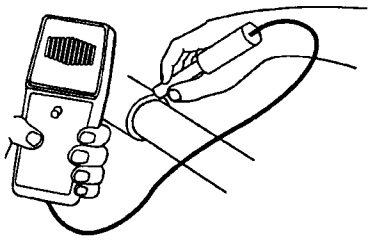

BUBBLE LEAK DETECTION

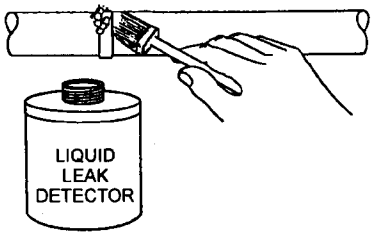

ALL GAS LINES, FITTINGS, AND VALVES CHECKED FOR LEAKS

16. THERMOSTAT INSTALLATION

- **Location and Mounting**
  - New thermostat shall be installed at existing location unless affected by drafts, heat from direct sun, or adjacent appliances.
  - Thermostat installed in a new location:
    - Shall be mounted with the top of thermostat 60" above the floor when occupants are not handicapped.
    - May me installed as low as 48" above the floor when an occupant uses a wheelchair.
  - Thermostat shall be located away from direct sunlight, doors, windows, return/supply air, appliances, and sources of electrical interference.
  - Mounting bracket shall be securely attached to wall with screws for wood, or appropriate anchors for drywall and plaster.
  - Any holes or damage to wall from installation or removal of thermostat shall be repaired in a workmanlike manner.
- **Wiring**
  - All wiring shall be a minimum of 18 gauge and conform to manufacturer's specifications and local codes.
  - All wiring shall be installed inside wall cavities when possible.
  - When not inside a wall, exposed wiring shall be enclosed in a raceway.
- **Programming and Operation**
  - Thermostat shall be cycled to insure proper operation of all functions.
  - Setbacks shall be programmed in accordance with customer's wishes.

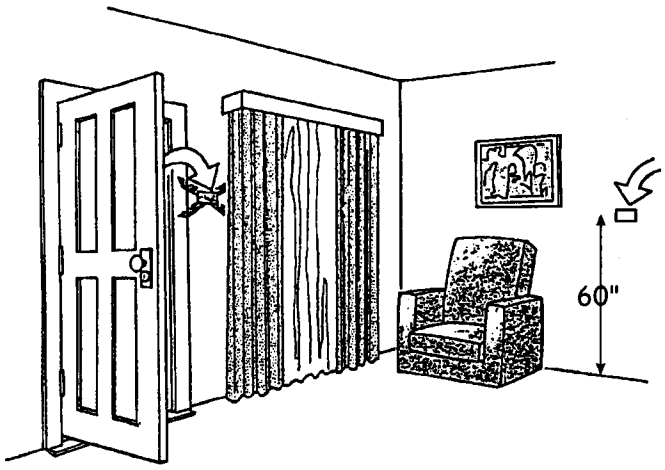

16. THERMOSTAT INSTALLATION (continued)

- **Instructions and Warranty**
  - Customer shall be provided with:
    - A demonstration with verbal instructions for operating the thermostat and installing batteries.
    - The manufacturer's written instructions and warranty.

17. POST-INSTALLATION REQUIREMENTS

- **Appliance Operation**
  - The installed unit shall be tested for proper operation.
  - Proper operation shall be explained and demonstrated to the customer, including:
    - Operation of all user-accessible controls.
    - Filter replacement.
    - Routine maintenance recommended by manufacturer.
  - Manufacturer's written instructions and warranty documents shall be supplied to the customer.

INSTRUCTIONS AND WARRANTY
PROVIDED TO CUSTOMER

17. POST-INSTALLATION REQUIREMENTS (continued)

- **Cleanup and Disposal**
  - Paint dust and chips, scraps, and other debris resulting from weatherization activities shall be cleaned up and removed from the premises—utilizing lead-safe practices when applicable.
  - Furniture and other household items moved for weatherization work shall be returned to their original positions.
  - All packing materials and installation debris shall be cleaned up and removed from the premises.
  - All replaced equipment and parts shall be removed from the premises and properly disposed of unless specified otherwise in the home improvement contract.
  - Refrigerant shall be recovered and all hazardous waste materials shall be disposed of in conformance with federal, state and local codes.

EPA

STRATOSPHERIC OZONE INFORMATION

HOT LINE

800-296-1996

INFORMATION ABOUT HANDLING REFRIGERANT AND OTHER HAZARDOUS MATERIALS IS AVAILABLE FROM EPA'S STRATOSPHERIC OONE INFORMATION HOT LINE

18. LEAD-SAFE WEATHERIZATION

- **Lead-safe practices shall be employed when working with pre-1979 painted materials per state codes T8 Section 1532.1 and T17 Section 36000, et seq.**

CALIFORNIA DEPARTMENT OF HEALTH SERVICES **Childhood Lead Poison Prevention Program** **Lead-Related Construction Information Hot-Line** **1-800-597-LEAD (1-800-597-5323)** **www.childlead.com**	
NATIONAL LEAD INFORMATION CENTER 1-800-424-LEAD	
EPA United States Environmental Protection Agency **US EPA Region IX** **75 Hawthorne St.** **San Francisco, CA 94105** **Region IX Contact: Don Lanier** **(415) 744-1123**	**U.S. Department of Housing and Urban Development** **Office of Lead Hazard Control** **451 7th Street, S.W., Room B-133** **Washington, DC 20410** **PH: 202-755-1785** **FAX: 202-755-1000**
www.epa.gov/lead/index.html	www.hud.gov/lea/leahome.html

SEE SEPARATE "NONFEASIBILITY CRITERIA" WORD DOCUMENT FOR THE NONFEASIBILITY PAGE TO THIS SECTION

SECTION 29

NATURAL GAS APPLIANCE TESTING (NGAT) STANDARDS

PART 1: GENERAL CRITERIA

1. TEST EQUIPMENT AND ACCESSORIES

- **Carbon Monoxide Analyzers**
  - **Shall be manufactured under an ISO 9001 quality management system or be ISO 9001 Certified.**
  - **Must, at a minimum, measure CO levels from zero ppm to 999 ppm.**
- **Test Equipment Calibration**
  - **Carbon monoxide analyzers shall be maintained and calibrated in accordance with manufacturer's specifications.**

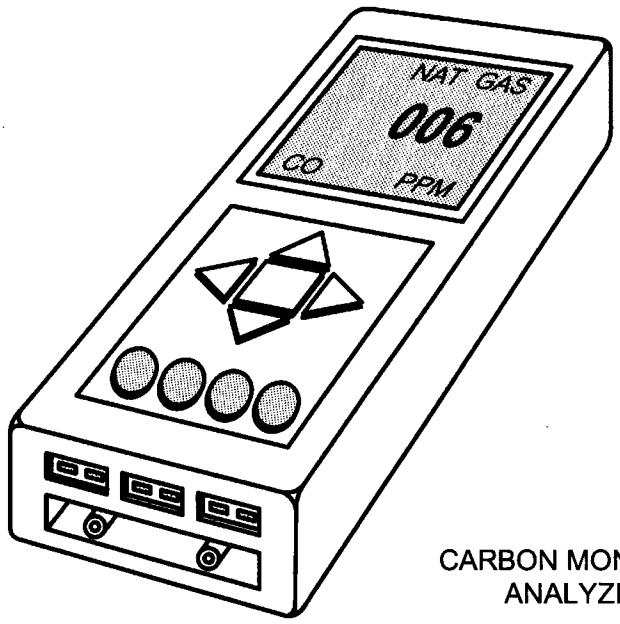

CARBON MONOXIDE ANALYZER

2. NGAT APPLICABILITY

- **In homes receiving infiltration reduction measures, NGAT shall be conducted when the home:**
  - **Is heated with natural gas, or**
  - **Has one or more other natural gas appliances affecting the living space.**
- **NGAT shall be conducted for all natural gas appliances affecting the living space *except* appliances that are: (a) abandoned*, or (b) inaccessible*.**
- **Natural Gas Appliances Affecting the Living Space**
  - **Appliances affecting the living space are (a) all space heating appliances, and (b) other appliances in the following locations:**
    - **Partially or entirely within the living space (including closets located within the envelope but accessed from outdoors).**
    - **Attached garage, attic, or basement.**
    - **An outdoor location within 4' of an operable door or window leading into the living space.**
    - **A location where combustion products from the appliance could infiltrate a forced air duct system (e.g., in a garage or room containing supply or return plenum/ductwork).**
  - **Appliances in all other locations are considered to be appliances not affecting the living space.**
- **Natural Gas Appliances Not Affecting the Living Space**
  - **Only checks for gas leaks are performed.**

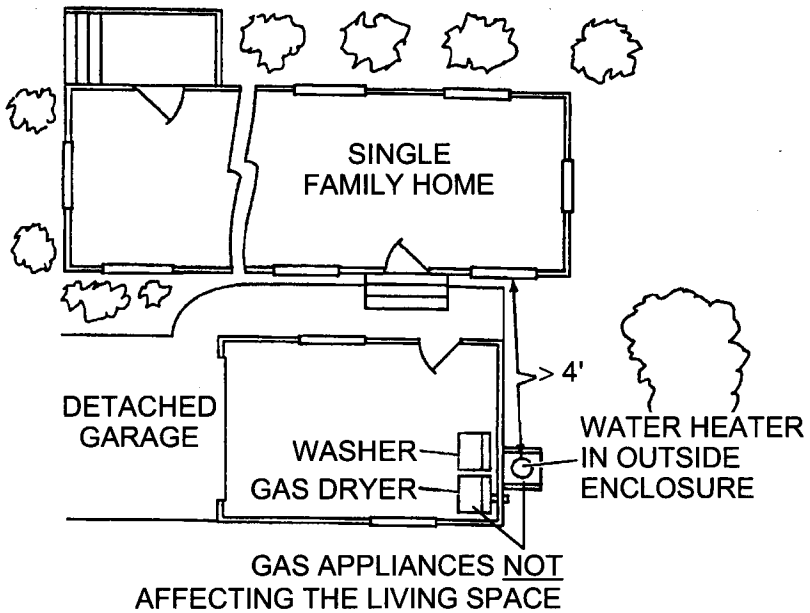

***See Definitions.**

PART 2: PRE-WEATHERIZATION EVALUATIONS

3. PRE-WEATHERIZATION ASSESSMENT

- **The assessment process shall include a check of the following:**
  - **Gas leaks (Item 4)**
  - **Inadequate CVA (Item 5)**
  - **Inadequate clearance between water heater vent termination and evaporative cooler inlet (Item 6)**
  - **Other improper flue/vent terminations (Item 6)**
  - **Inoperable or inaccessible gas appliance (Item 7)**
  - **Gas clothes dryer in the living space not exhausted outdoors (Item 7)**
  - **Unvented combustion space heater in the living space (Item 7)**
  - **When a whole house fan is in ceiling, gas water heater or open combustion furnace with standing pilot in the attic (Item 7)**
  - **Range with Space Heater/Incinerator not vented outdoors (Item 7)**
  - **Open combustion water heater located in a sleeping area (Item 7)**
- **Before weatherization work commences, (a) gas leaks shall be repaired, (b) inoperable appliances shall be checked by a utility gas service technician (or designee), and (c) all vent termination clearances/defects and combustion air deficiencies shall be confirmed feasible to correct.**

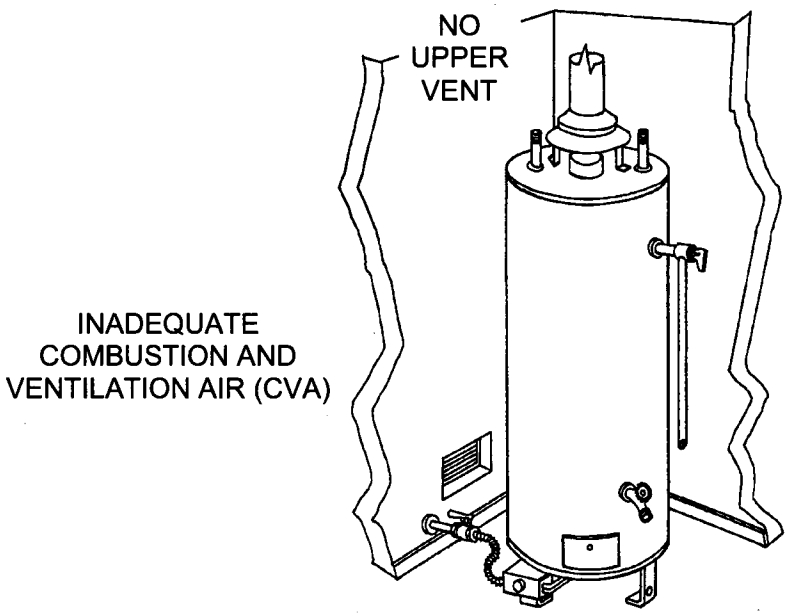

4. GAS LEAKS

- **Natural gas appliances shall be checked for gas leaks.**
- **Acceptable methods include the following:**
  - **Olfactory (Sniff) Test performed above, but within 2' of, all valves and fittings.**
  - **Application of leak detection liquid to line valves and to fittings on valves, flexible gas connectors, and pipes.**
  - **Air sampling with electronic leak detection equipment near valves, fittings, flexible gas connectors, and pipes.**
- **Gas leaks shall be repaired by a utility gas service technician (or designee).**

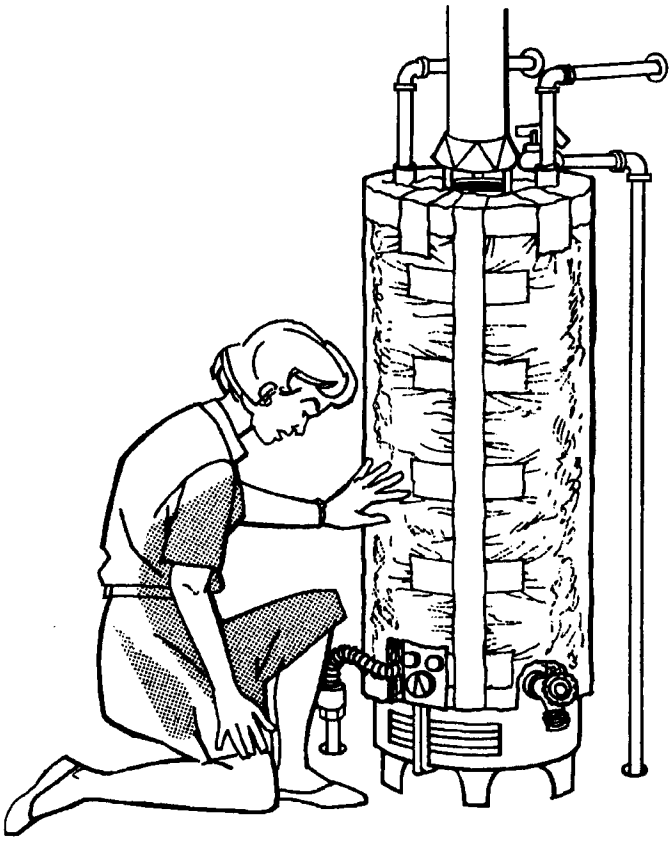

CHECKING FOR NATURAL GAS ODOR

5. COMBUSTION AND VENTILATION AIR (CVA) EVALUATION

- **CVA shall be evaluated for open combustion natural gas heating systems and water heaters (cooking appliances and clothes dryers are *excluded*).**
- **CVA shall comply with these guidelines and Appendix A.**
- **Appliances Drawing *Outdoor* Air through Combustion-Air Openings or Ducts**
  - **An *upper* opening or duct shall be located above the draft hood, <u>and</u> a *lower* opening or duct shall be located within 12" of the floor.**
  - **Combustion air openings and vertical ducts shall each provide 1 sq. in. net free venting area (NFVA) per 4,000 Btu/hr of input.**
  - **Horizontal ducts shall each provide 1 sq. in. NFVA per 2,000 Btu/hr of input.**
  - **Combustion air may also be obtained through a <u>single</u> <u>upper</u> vent or duct to the attic or outdoors under the following conditions:**
    - **Vent NFVA is at least: (a) 1 sq. in. per 3,000 Btu/hr input, and (b) not less than the sum of the cross-sectional areas of all vent connectors in the space.**
    - **Equipment has clearances of at least 1" sides and back, and 6" in front.**

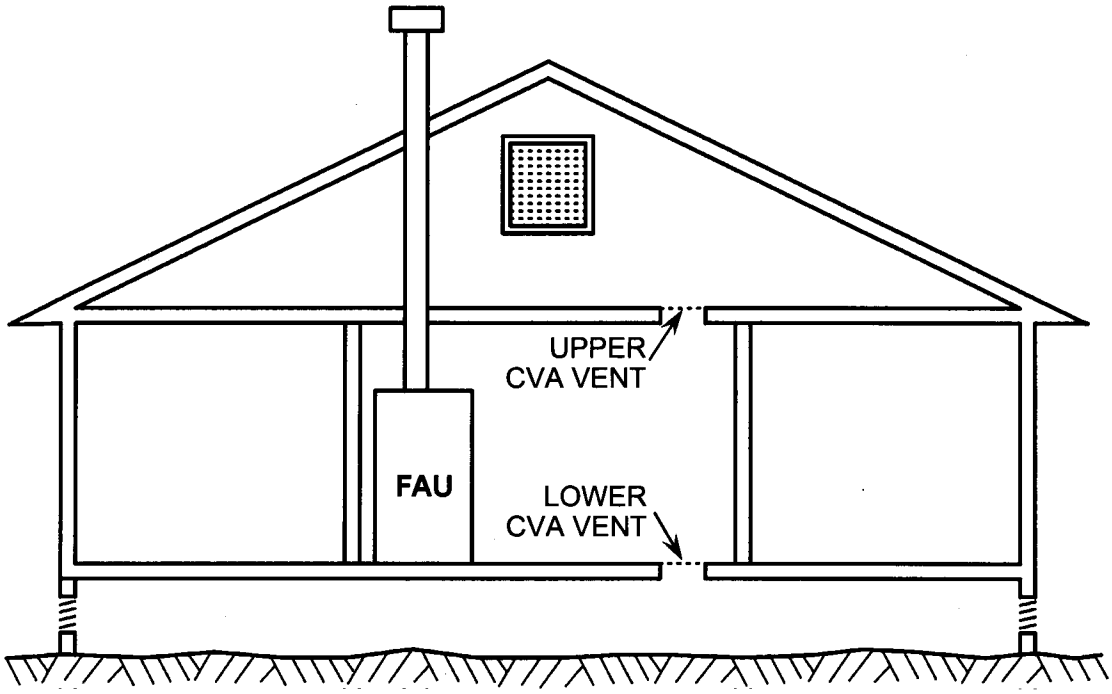

5. COMBUSTION AND VENTILATION AIR (CVA) EVALUATION (continued)

- When Appliances Draw Combustion Air from Outdoors
  - Combustion air may be obtained <u>from outdoors</u> by means of:
    - Permanent openings (undampered vents) of the required size directly to outdoors through enclosure floor, roof, or walls; <u>or</u>
    - Continuous vertical or horizontal ducts of the required cross-sectional area extending from the enclosure to outdoors.
  - Combustion air may be obtained <u>from the attic</u>, provided:
    - Attic vents are not subject to ice or snow blockage.
    - The attic vertical clear height is at least 30" at the peak (from top of ceiling joists to bottom of rafters/ridge board).
    - Attic ventilation is sufficient to provide the required volume of combustion air.
  - Combustion air may be obtained <u>from under the floor</u>, provided:
    - Under-floor spaces have free flow of air.
    - Unobstructed openings to outdoors exist that are at least twice the NFVA of the required combustion air vent openings.
  - Louvers, Grilles, and Screens
    - Blocking effects of louvers, grilles, and screens shall be considered when calculating NFVA of an opening (see Appendix A).

SOURCES OF COMBUSTION AIR		
OUTDOORS	**ATTIC**	**UNDER FLOOR**
• Permanent openings with undampered vents <u>or</u> continuous ducts (vertical or horizontal). • Vent directly to outdoors. • 1/4" screen mesh on all combustion-air openings.	• Minimum 30" attic height at the peak. • Adequate attic ventilation that is unobstructed. • Duct/sleeve extending 6" above top of ceiling joists and insulation.	• Free flow of air. • Unobstructed openings to outdoors with at least twice the area of required combustion air vent NFVA.

5. **COMBUSTION AND VENTILATION AIR (CVA) EVALUATION (continued)**

- **When Appliances Draw Combustion Air from Indoors**
  - **Unconfined Space:**
    - **A room/space that has a volume of at least 50 cu. ft. per 1,000 Btu/hr total input rating of the open combustion furnace and/or water heater in that room/space.**
    - **Combustion air is considered adequate.**
  - **Confined Space:**
    - **A room/space that has a volume of less than 50 cu. ft. per 1,000 Btu/hr total input of the open combustion furnace and/or water heater in that room/space.**
    - **Combustion air is not adequate, and**
    - **Proper vent openings to adjacent space(s) must be present.**
- **Appliances Located in an Indoor Confined Space**
  - **Upper and lower vent openings shall be present which: (a) freely communicate with other indoor rooms/spaces, and (b) provide a combined volume of at least 50 cu. ft. per 1,000 Btu/hr total input.**
  - **The vent openings shall meet the following requirements:**
    - **Each vent opening shall provide 1 sq. in. of NFVA per 1,000 Btu/hr input, and shall be no smaller than 100 sq. in. NFVA.**
    - **Lower vents shall be located within 12" of the floor, and upper vents shall be located above the draft hood.**

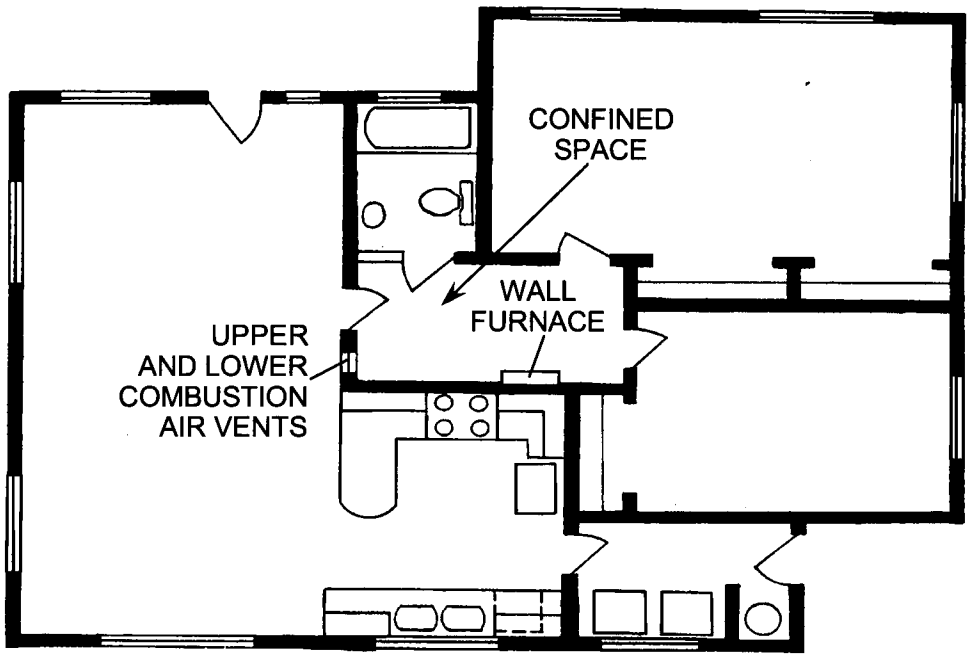

WALL FURNACE LOCATED IN AN INDOOR CONFINED SPACE (VOLUME OF HALLWAY IS LESS THAN 50 CUBIC FEET PER 1,000 BTU/HR INPUT OF THE FURNACE)

5. COMBUSTION AND VENTILATION AIR (CVA) EVALUATION (continued)

- **Appliances Located in a Garage**
  - **When a garage (finished or unfinished) is an unconfined space, combustion air is considered adequate.**
  - **When a converted (finished) garage is a confined space used as conditioned living space:**
    - **Appliance(s) shall be isolated from the conditioned space by an enclosure vented to outdoors (as specified on page 29-5).**
    - **The garage shall not be vented into the main body of the house to obtain additional indoor combustion air.**
  - **When a garage is a confined space that is (a) unfinished or (b) finished and unconditioned (not living space), upper and/or lower permanent venting to outdoors shall provide at least 1 sq. in. NFVA per 4,000 Btu/hr total input.**
- **Appliances Located in a Crawlspace or Partial Basement**
  - **When the underfloor area (crawlspace or crawlspace plus partial basement) is an unconfined space, combustion air is adequate.**
  - **When the underfloor area is a confined space:**
    - **The under-floor space shall have free flow of air.**
    - **Unobstructed openings to outdoors shall provide at least twice the NFVA of the required combustion air vent openings.**
- **Appliances Located in an Attic**
  - **When attic is unconfined space, combustion air is adequate.**
  - **When attic is a confined space:**
    - **Upper and/or lower permanent attic venting shall be present on two sides/ends of the attic, and**
    - **Venting on each side/end shall provide at least 1 sq. in. NFVA per 4,000 Btu/hr total input.**

OPEN COMBUSTION WATER HEATER LOCATED IN ATTIC

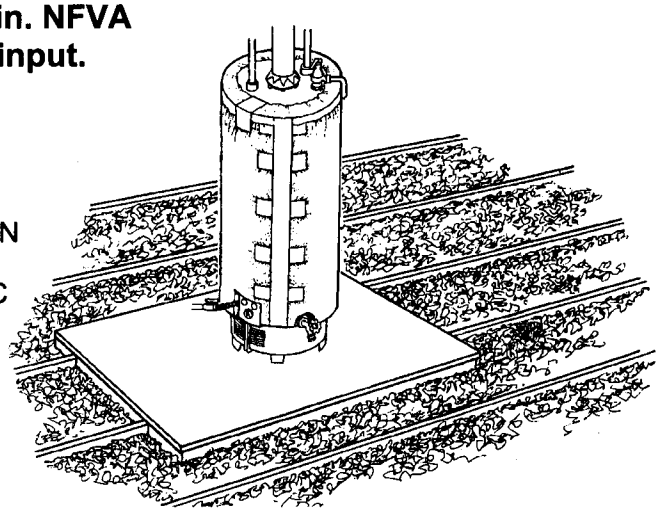

UPPER AND/OR LOWER ATTIC VENTS WITH CROSS VENTILATION REQUIRED WHEN ATTIC IS A CONFINED SPACE

6. FLUE/VENT SYSTEM EXAMINATION

- **All gas vents shall terminate outdoors.**
- **Gas vents located 4' or more from a vertical wall or similar obstruction shall extend at least 1' above the roof (slopes up to 6/12), in accordance with CMC Chapter 8.**
- **Gas vents located less than 4' from a vertical wall or similar obstruction shall terminate at least:**
  - **2' above the highest point where they pass through the roof, and**
  - **2' higher than any portion of the building within 10'.**
- **Gas vents shall terminate no closer to a door, openable window, or gravity air inlet than the following minimum distances:**
  - **4' below, or**
  - **4' horizontally from, or**
  - **1' above.**

  ***Exception 1*: Vent terminals for Direct Vent appliances:**
    - **At least 9" away for inputs up to 50,000 Btu/hr.**
    - **At least 12" away for inputs 50,100 to 65,000 Btu/hr.**

  ***Exception 2*: Vent terminals for Forced or Induced Draft systems (e.g., induced draft space/water heater or condensing furnace):**
    - **At least 12" away.**

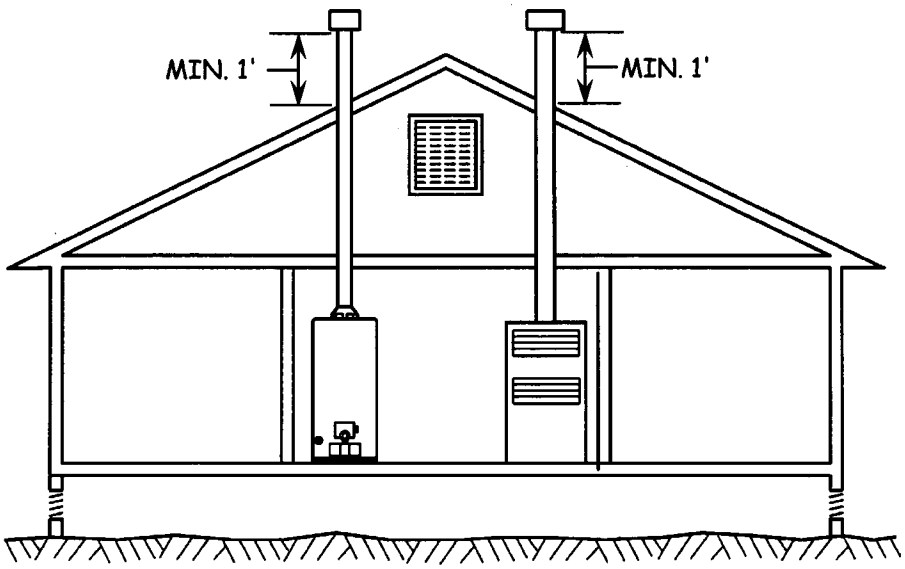

MINIMUM 1' HEIGHT FOR SLOPES UP TO 6/12

6. **FLUE AND VENT SYSTEM EXAMINATION (continued)**
   - **Outdoor Water Heater Vent Termination**
     - **When an outdoor water heater is located within 4' of a first-floor wall, the vent pipe must terminate at least 1' above the first-floor roof.**
       - **The pipe may be offset from the roof overhang.**
       - **Offsets shall not exceed 45°, except one 60° offset is allowed.**
   - **Flue and Vent Systems Terminating Near an Evaporative Cooler**
     - **A *water heater* flue/vent pipe located within 10' of an evaporative cooler shall terminate at least 3' above the cooler intake.**
     - **A *furnace* flue/vent pipe within 10' of an evaporative cooler shall terminate at least 3' above the cooler intake <u>unless</u>:**
       - **All cooler discharge openings are equipped with a vent cover, and**
       - **The client is informed of the non-conforming flue/vent and advised to keep cover(s) in place during the heating season.**

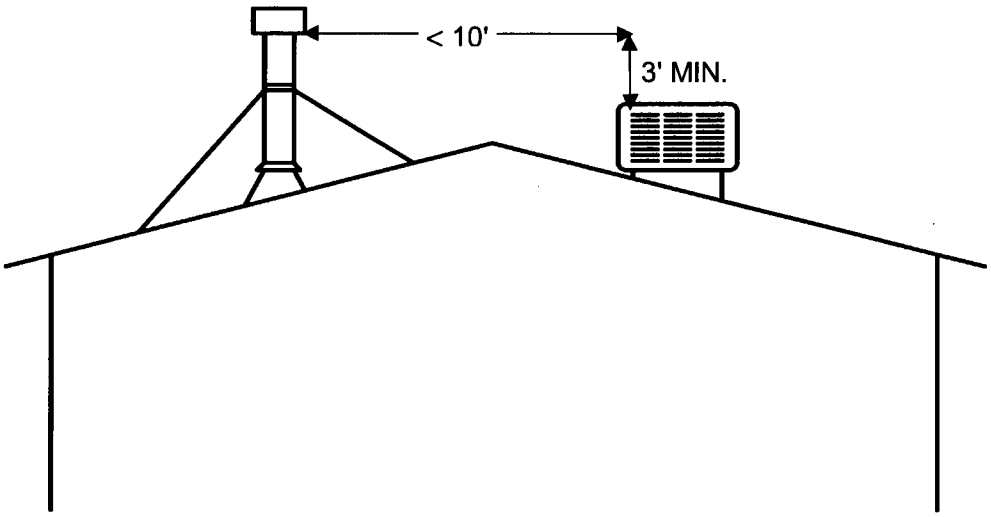

7. ADDITIONAL EXAMINATIONS OF NATURAL GAS APPLIANCES

- **Inoperable Gas Appliances**
  - **Inoperable natural gas appliances must be checked by a utility gas service technician (or designee), *unless* they are: (a) abandoned*, or (b) inaccessible*.**
- **Infiltration reduction measures shall <u>not</u> be installed if any of the following conditions are present:**
  - **<u>Gas clothes dryer</u> located in the living space but <u>not</u> exhausted outdoors**.**
  - **<u>Return leak</u> present that can draw in combustion products from the FAU or other open combustion appliances (e.g., in a garage or room containing supply or return plenum/ductwork).**
  - **<u>Whole house fan</u> vented into an attic that contains a gas water heater or an open combustion furnace with standing pilot.**
  - **<u>Unvented combustion space heater</u> (e.g., gas or kerosene unit) present in the living space.**
  - **<u>Open combustion water heater</u> present in a sleeping area.**
  - **<u>Gas range</u> present which has a <u>space heater or incinerator</u> that is not properly vented outdoors.**
  - **Inoperable gas appliance.**

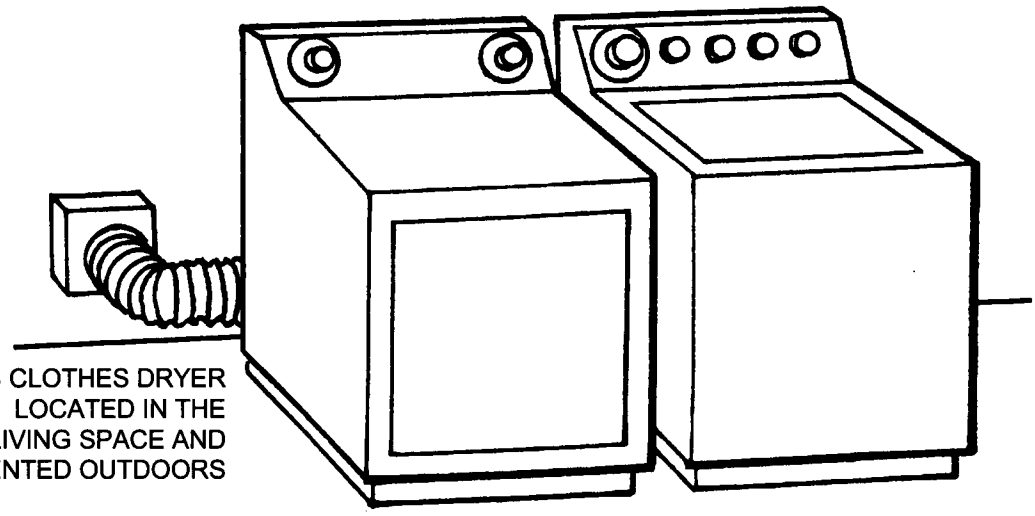

***See Definitions.**

****Termination in a crawlspace or basement is acceptable when the space: (a) has adequate cross-ventilation, (b) does not have a return air intake in the floor, *and* (c) does not contain an open combustion furnace or a combustion air vent located in the floor. Any dryer termination in an open combustion appliance enclosure/closet is not acceptable.**

PART 3: WEATHERIZATION CREW VERIFICATIONS

8. PRELIMINARY VISUAL EVALUATIONS

- **A check shall be made for the following conditions, which preclude installation of infiltration reduction measures unless repair is feasible:**
  - **Gas leaks and soldered gas connectors (Item 10)**
  - **Inadequate CVA (Item 11)**
  - **Inadequate clearance between water heater vent termination and evaporative cooler inlet (Item 12)**
  - **Other improper flue/vent terminations (Item 12)**
  - **Draft hood improper—misaligned, missing, or doubled (Item 12)**
  - **Flue/vent hazard, such as disconnection, hole/leak indoors, not extended outdoors (Item 12)**
  - **Flue/vent connection to a solid-fuel chimney (Item 12)**
  - **Inoperable or inaccessible gas appliance (Item 13)**
  - **Appliance components missing or damaged (Item 13)**
  - **Gas clothes dryer located in the living space but not exhausted outdoors (Item 13)**
  - **Return leaks that can draw in combustion products from the FAU or other open combustion appliances (Item 13)**
  - **Unvented combustion space heater in the living space (Item 13)**
  - **Gas range with heater/incinerator not vented outdoors (Item 13)**
  - **Whole house fan vented into an attic that contains gas water heater or open combustion furnace with standing pilot (Item 13)**
  - **Open combustion water heater located in a sleeping area (Item 13)**
  - **When gas log is primary heat source, fireplace damper not blocked partially open (Item 20).**

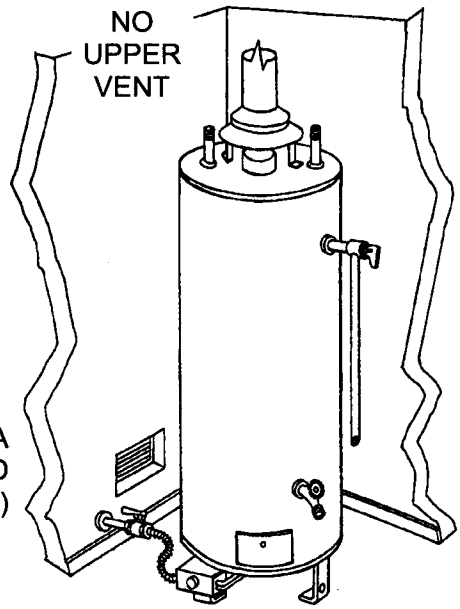

PART 4: POST-WEATHERIZATION NGAT PROCEDURES

9. POST-WEATHERIZATION NGAT

- **Post-Weatherization NGAT shall be performed, which shall include the following procedures:**
  - **CO Analyzer zeroed outdoors.**
  - **Room Ambient CO Test with gas appliances off.**
  - **Check for gas leaks.**
  - **CVA Evaluation.**
  - **Appliance-off visual inspection of appliances, components, and flue/vent systems.**
  - **Appliance Ambient CO Test with natural gas appliances operated individually.**
  - **Draft Test on natural draft space and water heating appliances.**
  - **Exhaust/flue CO Test and Draft Test on natural gas fireplace logs.**
  - **Appliance-on visual inspection of appliances.**
- **Appliances that Fail NGAT Protocol**
  - **If a Room Ambient or Appliance Ambient CO measurement equals or exceeds the action level of 10 ppm, unit(s) causing elevated CO reading shall be serviced/adjusted by a utility gas service technician (or designee) and, when applicable, repaired or replaced.**
  - **An appliance that has inadequate draft or is inoperable shall be serviced/adjusted by a utility gas service technician (or designee) and, when applicable, repaired or replaced.**
  - **All units repaired or replaced shall undergo post-repair/replacement testing per Item 24.**

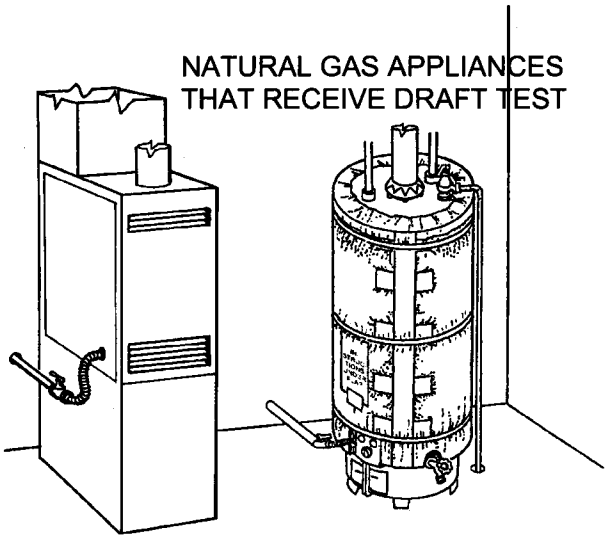

10. GAS LEAKS AND SOLDERED GAS CONNECTORS

- **Natural gas appliances shall be checked for gas leaks:**
  - **Prior to operating the appliance for testing.**
  - **With combustion appliances and exhaust fans/devices off.**
- **Appliances shall be checked for natural gas leaks using one or more of the following methods:**
  - **Olfactory (Sniff) Test performed above, but within 2' of, all valves and fittings.**
  - **Application of leak detection liquid to line valves and to fittings on valves, flexible gas connectors, and pipes.**
  - **Air sampling with electronic leak detection equipment near valves, fittings, flexible gas connectors, and pipes.**
- **When a gas leak is detected, inspection shall be conducted by a utility gas service technician (or designee).**
- **Leaks shall be repaired by a utility gas service technician (or designee) before appliances are operated for natural gas appliance tests.**
- **When faint gas odors are present prior, testing may occur; however, appliance shall be checked by a utility gas service technician (or designee).**
- **Soldered Gas Connectors**
  - **Old-style flexible gas connectors with soldered-on fittings shall be replaced with a new listed flexible gas connector.**

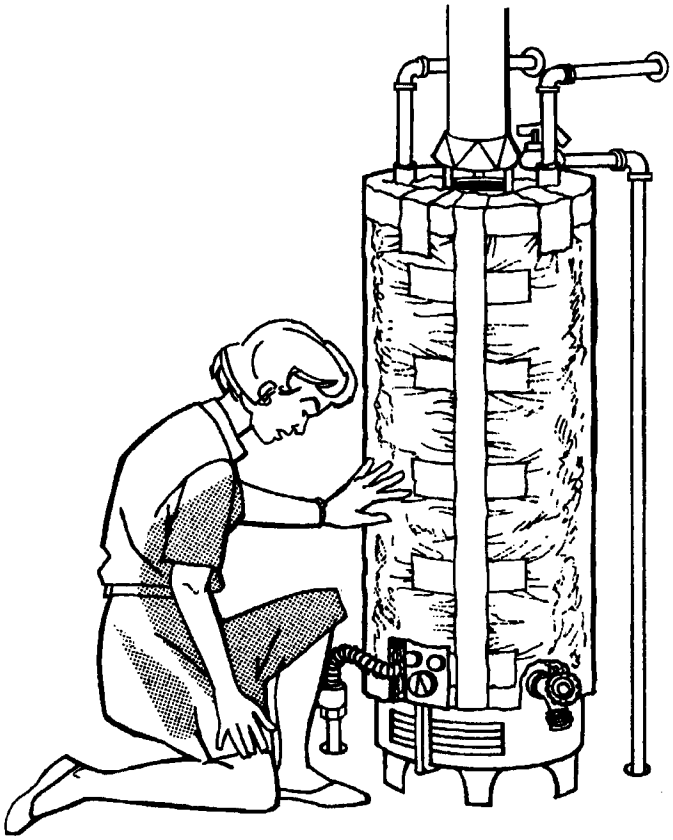

CHECKING FOR NATURAL GAS ODOR

11. COMBUSTION AND VENTILATION AIR (CVA) EVALUATION

- **CVA shall be evaluated for open combustion natural gas heating systems and water heaters (cooking appliances and clothes dryers are *excluded*).**
- **CVA shall comply with these guidelines and Appendix A, unless superseded by manufacturer's instructions or local code.**
- **Appliances Drawing *Outdoor* Air through Combustion-Air Openings or Ducts**
  - **An *upper* opening or duct shall be located within 12" of the enclosure ceiling, <u>and</u> a *lower* opening or duct shall be located within 12" of the floor.**
    <u>*Exception*</u>: Pre-existing upper openings and ducts are acceptable at any height above the draft hood.
  - **Combustion air openings and vertical ducts shall each provide 1 sq. in. net free venting area (NFVA) per 4,000 Btu/hr of input.**
  - **Horizontal ducts shall each provide 1 sq. in. NFVA per 2,000 Btu/hr of input.**
  - **Combustion air may also be obtained through a <u>single</u> <u>upper</u> vent or duct to outdoors under the following conditions:**
    - **Vent NFVA is at least: (a) 1 sq. in. per 3,000 Btu/hr input, and (b) not less than the sum of the cross-sectional areas of all vent connectors in the space.**
    - **Equipment has clearances of at least 1" sides and back, and 6" in front.**

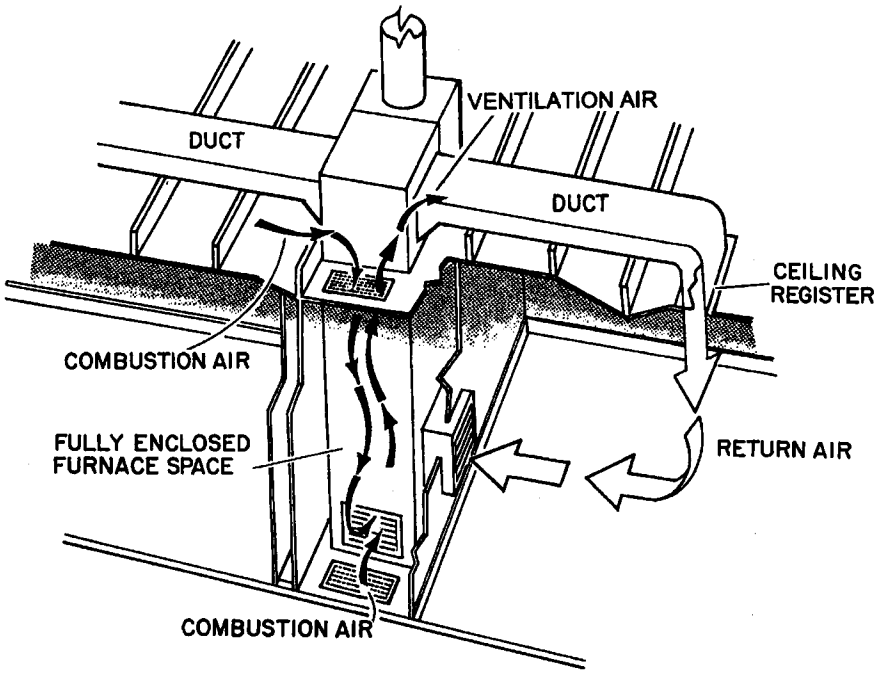

11. COMBUSTION AND VENTILATION AIR (CVA) EVALUATION (continued)

- When Appliance s Draw Combustion Air from Outdoors
  - Combustion air may be obtained from outdoors by means of:
    - Permanent openings (undampered vents) of the required size directly to outdoors through enclosure floor, roof, or walls; or
    - Continuous vertical or horizontal ducts of the required cross-sectional area extending from the enclosure to outdoors.
  - Combustion air may be obtained from the attic, provided:
    - Attic vents are not subject to ice or snow blockage.
    - The attic vertical clear height is at least 30" at the peak (from top of ceiling joists to bottom of rafters/ridge board).
    - Attic ventilation is sufficient to provide the required volume of combustion air.
  - Combustion air may be obtained from under the floor, provided:
    - Under-floor spaces have free flow of air.
    - Unobstructed openings to outdoors exist that are at least twice the NFVA of the required combustion air vent openings.
- Combustion-Air Ducts and Sleeves
  - Duct or sleeve into attic shall extend from appliance enclosure to at least 6" above the top of insulation.
  - Ducts and sleeves shall be a minimum of 26 gage galvanized steel or 24 gage aluminum, and ducts shall have a minimum cross-sectional dimension of 3".
- Louvers, Grilles, and Screens
  - Covering of 1/4" corrosion-resistant screen mesh is required on combustion air openings to outdoors, *except* ducts terminating in an attic, which shall not be screened on either end.
  - Blocking effects of louvers, grilles, and screens shall be considered when calculating NFVA of an opening (see Appendix A).

SOURCES OF COMBUSTION AIR		
OUTDOORS	**ATTIC**	**UNDER FLOOR**
• Permanent openings with undampered vents or continuous ducts (vertical or horizontal). • Vent directly to outdoors. • 1/4" screen mesh on all CVA openings.	• Minimum 30" attic height at the peak. • Adequate attic ventilation that is unobstructed. • Duct/sleeve extending 6" above top of ceiling joists and insulation.	• Free flow of air. • Unobstructed openings to outdoors with at least twice the area of required combustion air vent NFVA.

11. COMBUSTION AND VENTILATION AIR (CVA) EVALUATION (continued)

- **When Appliances Draw Combustion Air from Indoors**
  - **Unconfined Space:**
    - **A room/space that has a volume of at least 50 cu. ft. per 1,000 Btu/hr total input rating of the open combustion furnace and/or water heater in that room/space.**
    - **Combustion air is considered adequate.**
  - **Confined Space:**
    - **A room/space that has a volume of less than 50 cu. ft. per 1,000 Btu/hr total input of the open combustion furnace and/or water heater in that room/space.**
    - **Combustion air is not adequate.**
    - **Proper vent openings to adjacent space(s) must be present.**
- **Appliances Located in an Indoor Confined Space**
  - **Upper and lower vent openings shall be present which: (a) freely communicate with other indoor rooms/spaces, and (b) provide a combined volume of at least 50 cu. ft. per 1,000 Btu/hr total input.**
  - **The vent openings shall meet the following requirements:**
    - **Each vent opening shall provide 1 sq. in. of NFVA per 1,000 Btu/hr input, and shall be no smaller than 100 sq. in. NFVA.**
    - **Lower vents shall be located within 12" of the floor, and upper vents shall be located within 12" of the ceiling.**
      ***Exception*: Pre-existing upper vents are acceptable at any height above the draft hood.**

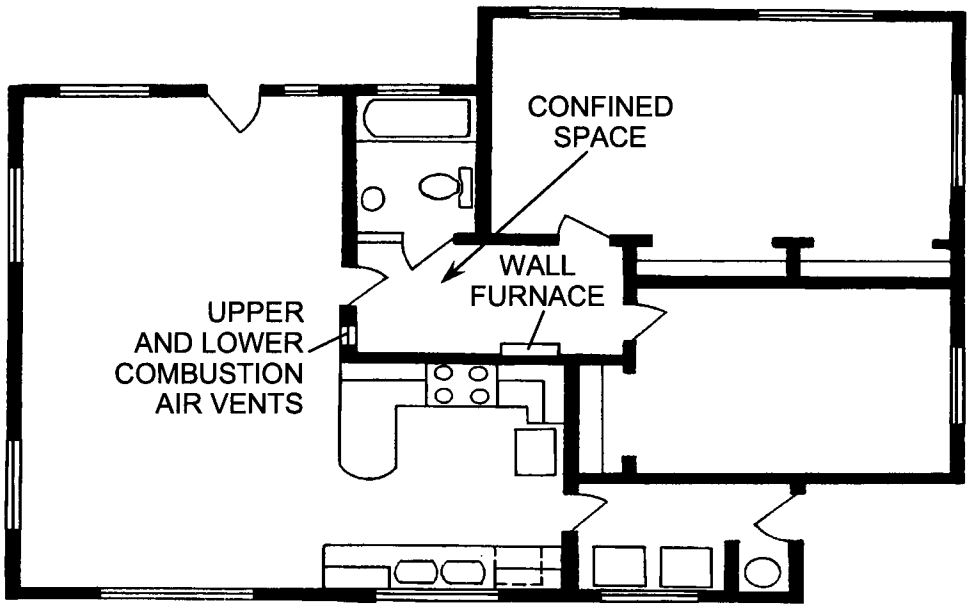

WALL FURNACE LOCATED IN AN INDOOR CONFINED SPACE (VOLUME OF HALLWAY IS LESS THAN 50 CUBIC FEET PER 1,000 BTU/HR INPUT OF THE FURNACE)

11. COMBUSTION AND VENTILATION AIR (CVA) EVALUATION (continued)

- **Appliances Located in a Garage**
  - **When a garage (finished or unfinished) is an unconfined space, combustion air is considered adequate.**
  - **When a converted (finished) garage is a confined space used as conditioned living space:**
    - **Appliance(s) shall be isolated from the conditioned space by an enclosure vented to outdoors (as specified on page 29-15).**
    - **The garage shall not be vented into the main body of the house to obtain additional indoor combustion air.**
  - **When a garage is a confined space that is (a) unfinished or (b) finished and unconditioned (not living space), upper and/or lower permanent venting to outdoors shall provide at least 1 sq. in. NFVA per 4,000 Btu/hr total input.**
- **Appliances Located in a Crawlspace or Partial Basement**
  - **When the underfloor area (crawlspace or crawlspace plus partial basement) is an unconfined space, combustion air is adequate.**
  - **When the underfloor area is a confined space:**
    - **The under-floor space shall have free flow of air.**
    - **Unobstructed openings to outdoors shall provide at least twice the NFVA of the required combustion air vent openings.**
- **Appliances Located in an Attic**
  - **When attic is unconfined space, combustion air is adequate.**
  - **When attic is a confined space:**
    - **Upper and/or lower permanent attic venting shall be present on two sides/ends of the attic, and**
    - **Venting on each side/end shall provide at least 1 sq. in. NFVA per 4,000 Btu/hr total input.**

OPEN COMBUSTION WATER HEATER LOCATED IN ATTIC

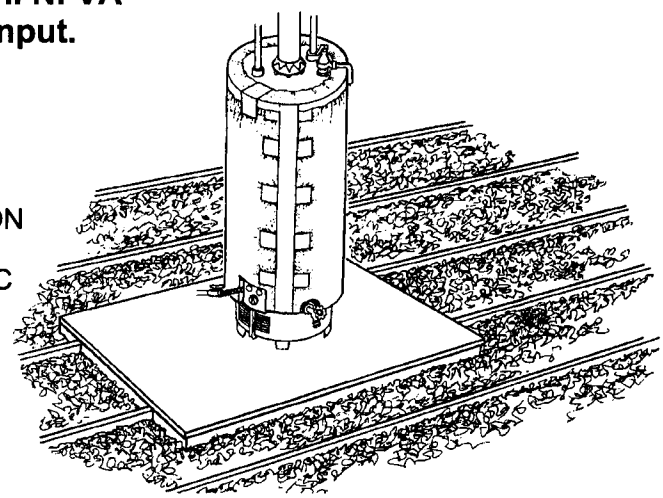

UPPER AND/OR LOWER ATTIC VENTS WITH CROSS VENTILATION REQUIRED WHEN ATTIC IS A CONFINED SPACE

12. FLUE AND VENT SYSTEM EXAMINATION

- All gas vents shall terminate outdoors.
- Flue and vent systems shall be free of:
  - Draft hood defects:
    - Improperly installed or positioned.
    - Multiple (stacked) draft hoods on a single appliance.
    - Missing (no draft hood at all).
  - Disconnections or unsafe joints (e.g., loose, unsecured, etc.).
  - Holes or other hazardous conditions requiring repair.
  - Connection to a solid-fuel appliance chimney.
- Gas vents located 4' or more from a vertical wall or similar obstruction shall extend at least 1' above the roof (slopes up to 6/12), in accordance with CMC Chapter 8.
- Gas vents located less than 4' from a vertical wall or similar obstruction shall terminate at least:
  - 2' above the highest point where they pass through the roof, and
  - 2' higher than any portion of the building within 10'.

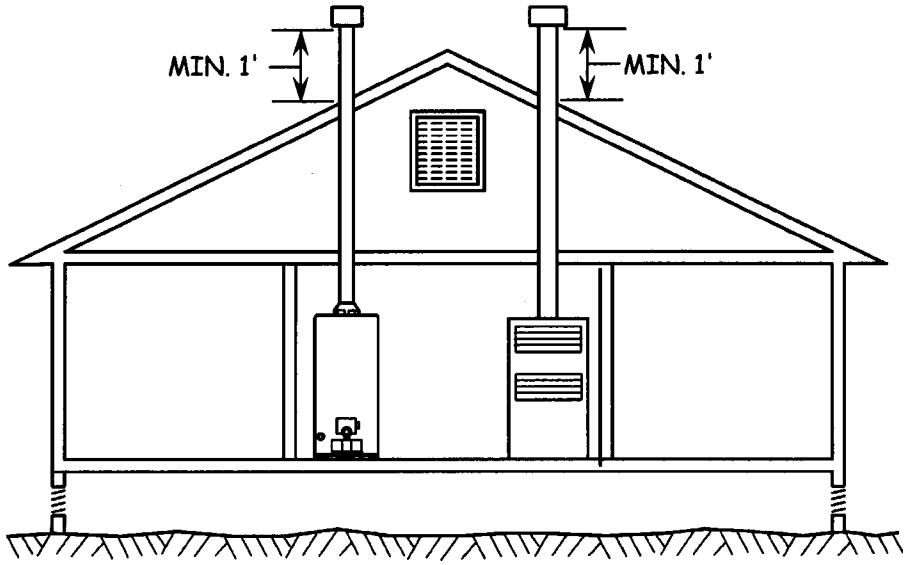

MINIMUM 1' HEIGHT FOR SLOPES UP TO 6/12

12. **FLUE AND VENT SYSTEM EXAMINATION (continued)**

- **Gas vents shall terminate no closer to a door, openable window, or gravity air inlet than the following minimum distances:**
  - **4' below, or**
  - **4' horizontally from, or**
  - **1' above.**

    ***Exception 1*: Vent terminals for Direct Vent appliances:**
    - **At least 9" away for inputs up to 50,000 Btu/hr.**
    - **At least 12" away for inputs 50,100 to 65,000 Btu/hr.**

    ***Exception 2*: Vent terminals for Forced or Induced Draft systems (e.g., induced draft space/water heater or condensing furnace):**
    - **At least 12" away.**
- **Outdoor Water Heater Vents**
  - **When an outdoor water heater is located within 4' of a first-floor wall, the vent pipe must terminate at least 1' above the first-floor roof.**
    - **The pipe may be offset from the roof overhang.**
    - **Offsets shall not exceed 45°, except one 60° offset is allowed.**
- **Flue and Vent Systems Terminating Near an Evaporative Cooler**
  - **A *water heater* flue/vent pipe located within 10' of an evaporative cooler shall terminate at least 3' above the cooler intake.**
  - **A *furnace* flue/vent pipe within 10' of an evaporative cooler shall terminate at least 3' above the cooler intake unless:**
    - **All cooler discharge openings are equipped with a vent cover, and**
    - **The client is informed of the non-conforming flue/vent and advised to keep cover(s) in place during the heating season.**

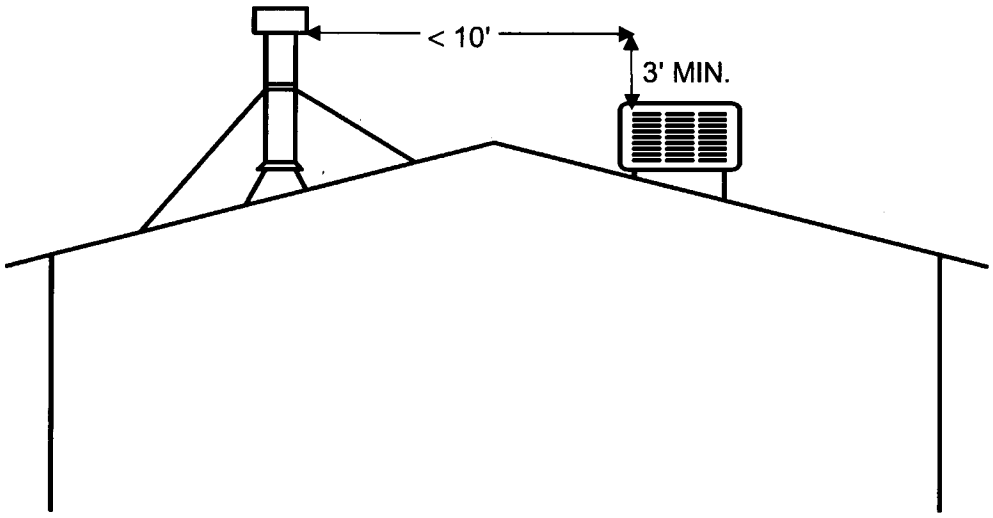

13. VISUAL APPLIANCE CHECKS

- **Inoperable Gas Appliances**
  - **Inoperable natural gas appliances must be checked by a utility gas service technician (or designee), *unless* they are: (a) abandoned*, or (b) inaccessible*.**
- **The following conditions are <u>not</u> acceptable when Infiltration Reduction Measures are installed:**
  - **<u>Gas clothes dryer</u> located in the living space but <u>not</u> exhausted outdoors**.**
  - **<u>Return leak</u> present that can draw in combustion products from the FAU or other open combustion appliances (e.g., in a garage or room containing supply or return plenum/ductwork).**
  - **<u>Whole house fan</u> vented into an attic that contains a gas water heater or an open combustion furnace with standing pilot.**
  - **<u>Unvented combustion space heater</u> (e.g., gas or kerosene unit) present in the living space.**
  - **<u>Open combustion water heater</u> present in a sleeping area.**
  - **<u>Gas range</u> present which has a <u>space heater or incinerator</u> that is <u>not</u> properly vented outdoors.**
  - **Inoperable gas appliance.**

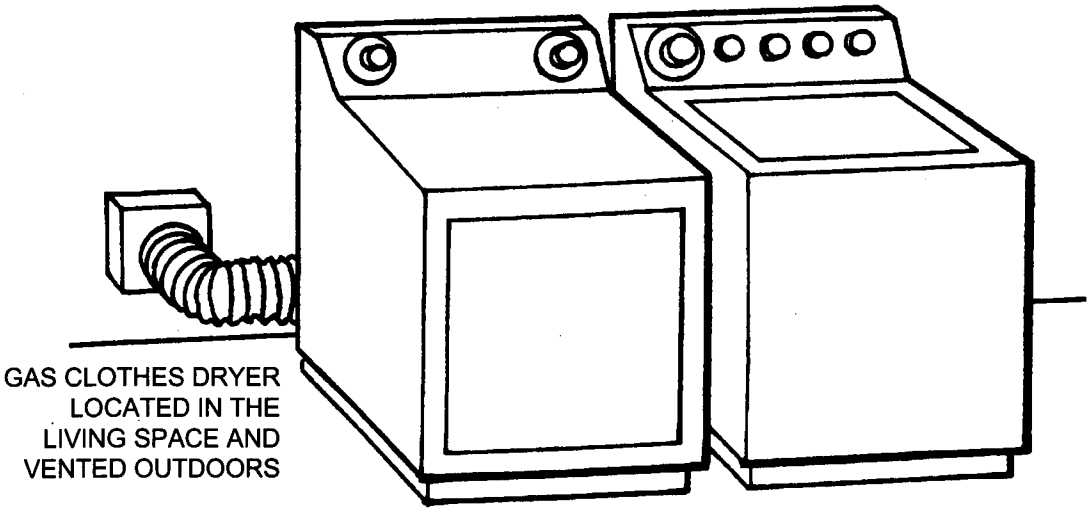

***See Definitions**

****Termination in a crawlspace or basement is acceptable when the space: (a) has adequate cross-ventilation, (b) does <u>not</u> have a return air intake in the floor, *and* (c) does <u>not</u> contain an open combustion furnace or a combustion air vent located in the floor. Any dryer termination in an open combustion appliance enclosure/closet is <u>not</u> acceptable.**

13. **VISUAL APPLIANCE CHECKS (continued)**
- **Appliance Components**
  - **The following appliance components shall be present:**
    - **Appliance door(s).**
    - **Combustion chamber access door(s).**
  - **Water heater shall have at least one access cover or roll-out shield.**
  - **Roll-out shield required on furnace when the unit was manufactured with a roll-out shield.**
- **Carbon and Rust**
  - **The top of the burner(s), the heat exchanger, draft hood and flue/vent pipe shall be examined for excessive amounts of carbon or rust.**

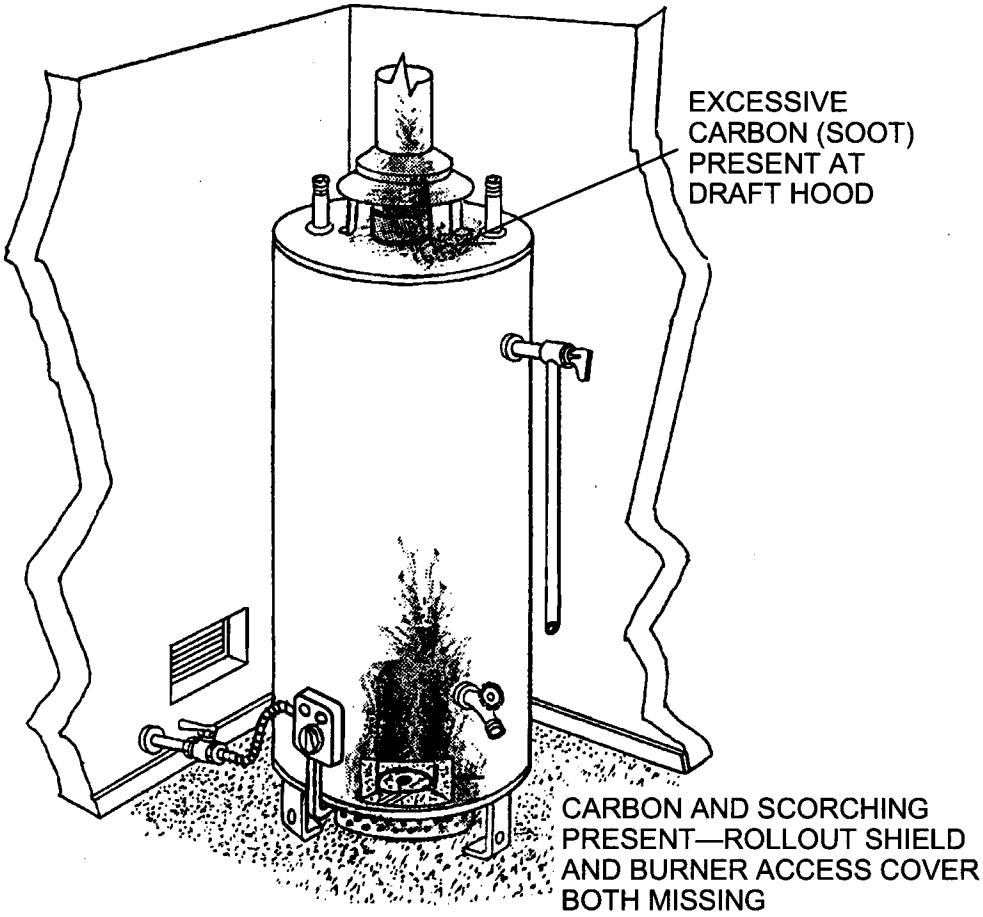

14. TEST CONDITIONS FOR *ROOM* AMBIENT CO TEST

- **Test shall be performed *prior* to operating any appliances.**
- **Test Conditions**
  - **All gas appliances in the living space turned off (e.g., at the thermostat).**
    ***Exception*: Water heater pilot may be operating, but main burner shall not be operating.**
  - **Air handler and all exhaust fans and air-exhausting devices turned off.**
  - **Exterior doors and windows closed.**
  - **Interior doors:**
    - **All interior room doors open.**
    - **Appliance enclosure doors closed.**
  - **Fireplace damper closed when feasible (no fire or hot coals).**
  - **If an interior cooler cover is available, it shall be in place.**

15. CO ANALYZER "ZEROING"

- **Just prior to performing *Room Ambient CO Test*, the analyzer shall be adjusted outdoors to read zero ppm CO.**
- **CO analyzer shall be protected from outdoor sources of CO and from wind bearing pollutants.**
- **Analyzer shall remain on during entire ambient test sequence when possible.**
- **If turned off during ambient testing, zeroing process shall be repeated before resuming tests.**

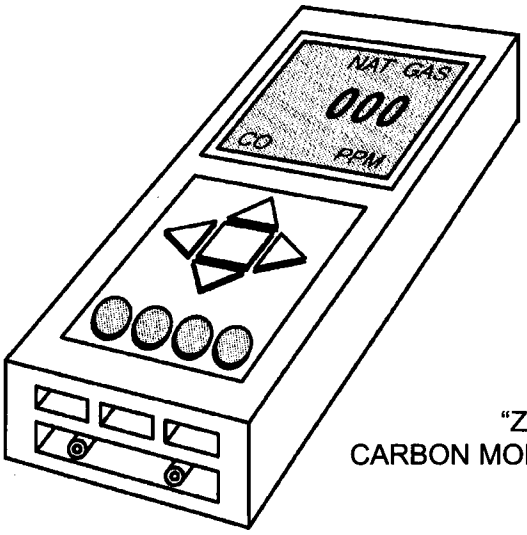

"ZEROED"
CARBON MONOXIDE ANALYZER

16. CONDUCTING ROOM AMBIENT CO TEST

- **Room Ambient CO Test shall be conducted immediately after zeroing the CO analyzer:**
  - **In an open area in the main body of the living space (e.g., in the center of the living room or living/dining combination area).**
  - **10' away from combustion appliances and supply registers (less than 10' away acceptable in smaller rooms).**
  - **6' above the floor.**
- **If Room Ambient CO Test measurement is 10 ppm or greater:**
  - **The living space shall be ventilated and the test repeated when a condition such as the following exists:**
    - **Heavy smokers are present, or**
    - **Wood-burning or unvented heating/cooking appliances were operating within the preceding half hour.**
  - **Appliance Ambient CO Tests shall be conducted even if CO is 10 ppm or greater after ventilation and repeat of the Room Ambient CO Test.**

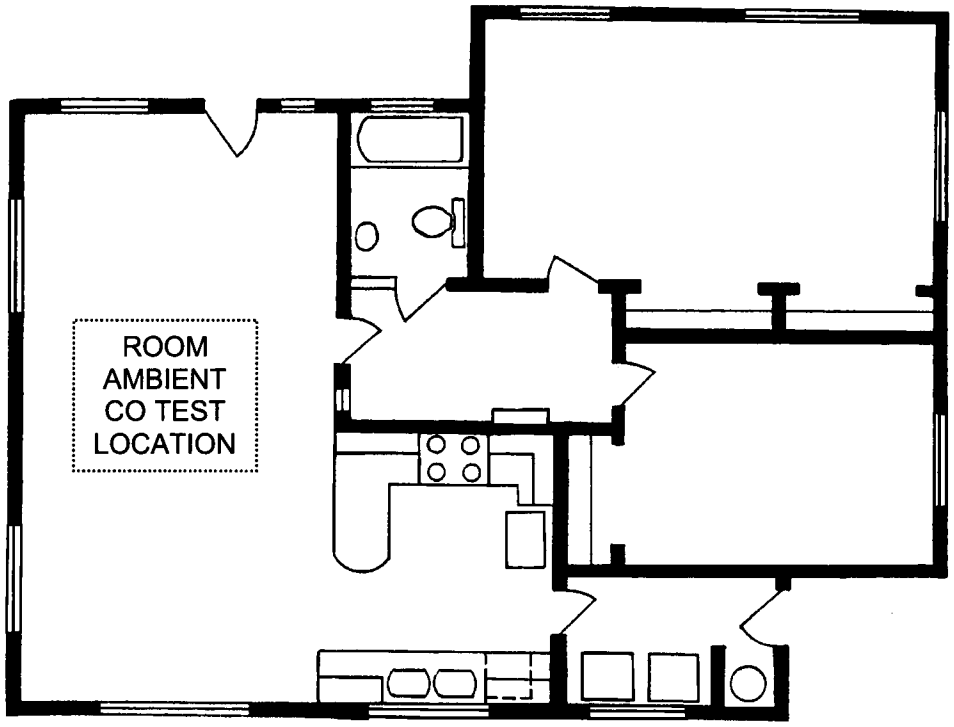

17. TEST CONDITIONS FOR APPLIANCE-ON CO AND DRAFT TESTS

- **The following test conditions shall be established for Appliance Ambient CO Tests and Draft Tests.**
- **Door/Window Positions for Tests in the Living Space**
  - **The following shall be closed:**
    - **All exterior doors and windows.**
    - **Doors to rooms containing a supply register when a central return is outside the room.**
    - **Appliance enclosure doors (except during tests).**
  - **The following shall be open:**
    - **Doors to all other living areas and rooms.**
    - **Door to utility room with clothes dryer exhausted outdoors. Exception: When a natural draft appliance in that room is tested, the door shall be closed.**
- **Door/Window Positions for Tests in an Unconditioned Garage**
  - **Drive-through door and windows shall remain closed during all tests.**
  - **Door into the living space shall be opened when exhaust devices are in the living space or an FAU is present.**
  - **All exhaust devices in the living space and the garage shall be operating.**
- **Appliances Located in Attic and Crawl-space**
  - **Devices exhausting into the attic/crawlspace shall be off during Draft Tests on appliances in those locations.**

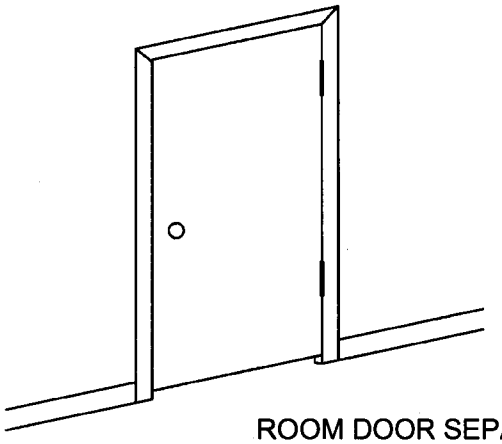

ROOM DOOR SEPARATING
SUPPLY REGISTERS
FROM A CENTRAL RETURN

17. TEST CONDITIONS FOR APPLIANCE-ON CO AND DRAFT TESTS (continued)

- **The following must be operating during tests:**
  - **FAU air handler.**
  - **All devices that exhaust air from the space containing an appliance being tested:**
    - **Include kitchen exhaust fans, bathroom and utility room fans, clothes dryer, central vacuum system, and manually-controlled attic ventilators.**
    - **Exclude whole house fan.**
- **FAU air filter(s) must be clean or shall be removed prior to testing.**
- **Clothes dryer lint screen shall be clean.**
- **Supply registers shall be open.**
  Exception: **Supply register(s) shall be closed when located in a utility room or basement containing a natural draft appliance.**
- **If an interior cooler cover is available, it shall be in place.**

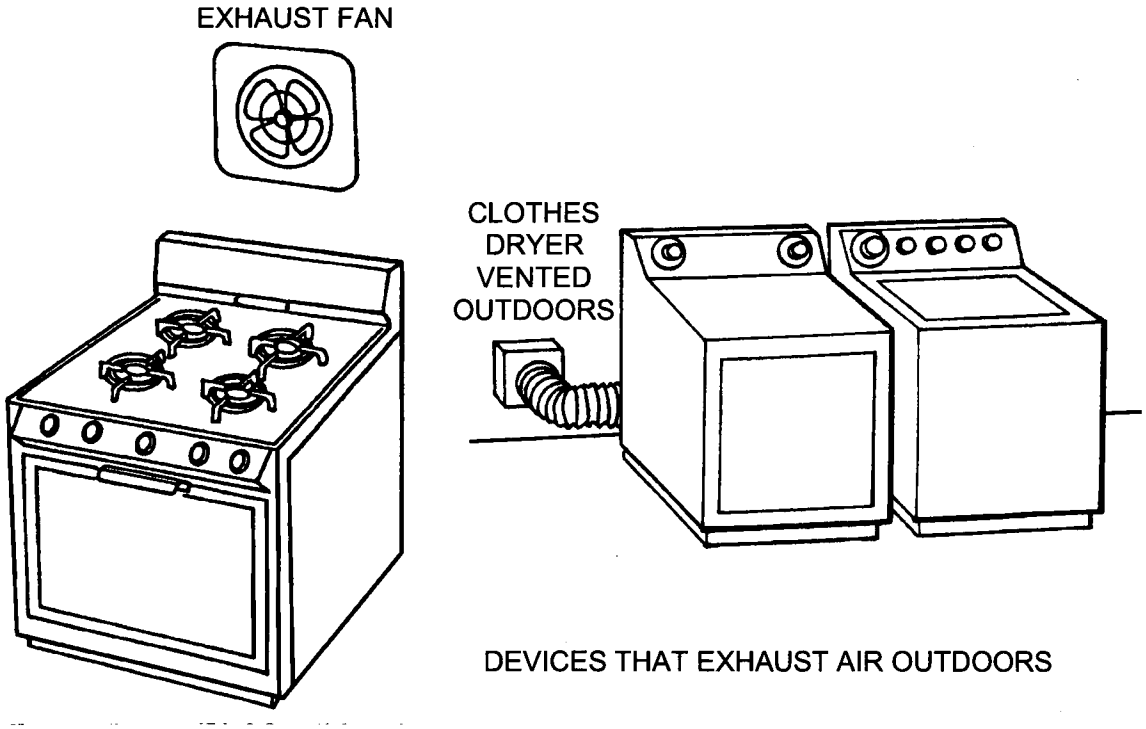

DEVICES THAT EXHAUST AIR OUTDOORS

18. TEST PROCEDURES FOR APPLIANCE AMBIENT CO TEST

- Test conditions shall be established as prescribed in Item 17.
- Natural Gas Heating Appliances
  - Heating appliance shall be operated for a minimum of 5 minutes.
  - All other gas appliances shall remain off.
    Exception: Water heater pilot may be operating, but main burner shall not be operating.
  - CO shall be measured in the following locations:
    - Ducted units: In the supply register nearest the furnace.
    - Heaters without ducts (direct vent, wall and floor furnaces, and free-standing heaters): In the atmosphere directly above the top of the unit.
  - The heating system shall be checked by a utility gas service technician (or designee) if Appliance Ambient CO Test CO ppm is:
    - Higher than Room Ambient CO Test CO ppm, or
    - Above 9 ppm.
- Natural Gas Water Heater
  - Storage water heater shall be operated for a minimum of 5 minutes.
  - Tankless water heaters shall be operated for a minimum of 1 minute.
  - All other gas appliances shall remain off.
  - CO shall be measured in the atmosphere directly above the top of the water heater (and draft hood or inducer, if applicable).
  - The water heater shall be checked by a utility gas service technician (or designee) if Appliance Ambient CO Test CO exceeds 9 ppm.
- Natural Gas Log
  - An exhaust/flue CO test shall be conducted per Item 20.
- Natural Gas Clothes Dryer
  - No CO test required.

APPLIANCE AMBIENT CO TEST CO ANALYZER PROBE LOCATIONS FOR HEATING APPLIANCES AND WATER HEATERS
• DUCTED UNITS: INSIDE SUPPLY REGISTER NEAREST THE FAU WITH TEST PROBE DIRECTED INTO THE AIR FLOW.
• NON-DUCTED HEATERS: IN THE ATMOSPHERE ABOVE THE UNIT.
• WATER HEATERS: IN THE ATMOSPHERE ABOVE THE UNIT AND DRAFT HOOD.

18. TEST PROCEDURES FOR APPLIANCE AMBIENT CO TEST (continued)

- **Natural Gas Kitchen Appliances**
  - **All other gas appliances shall remain off.**
    ***Exception*: Water heater pilot may be operating, but main burner shall not be operating.**
  - **Cooktop:**
    - **With ovens and broilers off, all cooktop burners, and griddle if present, shall be operated on highest setting for one minute.**
    - **CO shall be measured in the center of the kitchen.**
  - **Oven and Broiler Units:**
    - **With cooktop off, each oven shall be operated on highest setting (i.e., "Broil" when applicable) for a minimum or 5 minutes (with separate broiler burner off).**
    - **When a separate broiler burner is present, it shall be operated on highest setting for 5 minutes (with oven burner off).**
    - **CO shall be measured in the center of the kitchen for oven and separate broiler, when present.**
  - **Range with Space Heater or Incinerator**
    - **Heater/incinerator shall be operated for a minimum of 5 minutes on highest burner setting.**
    - **Unit shall be tested prior to operating oven/broiler or at least 15 minutes after oven/broiler has been turned off.**
    - **CO shall be measured in the atmosphere directly above the top of the unit.**
  - **CO Action Level**
    - **The appliance shall be checked by a utility gas service technician (or designee) if Appliance Ambient CO Test CO exceeds 9 ppm.**

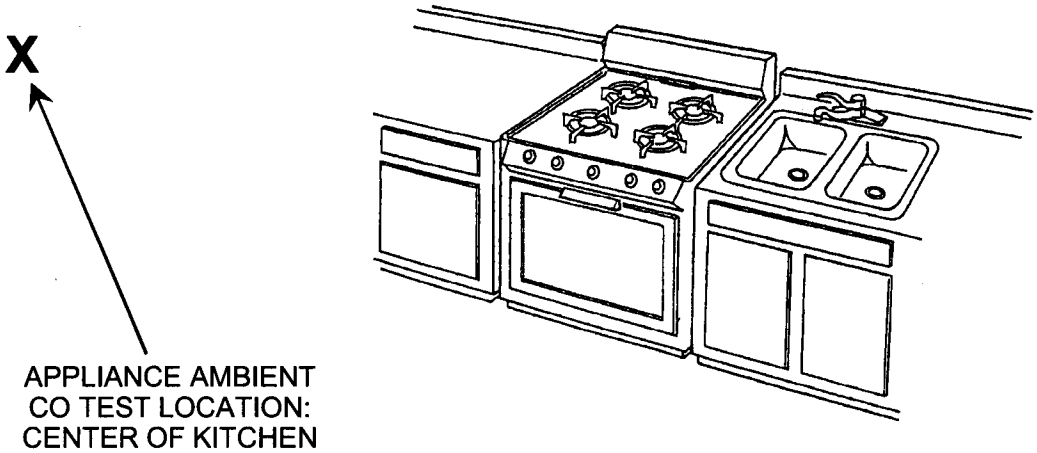

19. DRAFT EXAMINATION

- **Natural Gas Open Combustion Natural Draft Appliances**
  - **Draft tests shall be performed after a minimum of 5 minutes of appliance operation.**
  - **Visual/Smoke Draft Test shall be performed on Natural Draft appliances, including ovens vented outdoors.**
    - **Smoke shall be applied along the entire draft hood opening.**
    - **Draft is adequate <u>only if</u> smoke is drawn into the draft hood along the entire draft hood opening.**
- **Gas Logs**
  - **Visual/Smoke Draft Test shall be performed as prescribed in Item 20.**
- **All Units**
  - **Corrective action is required when Draft not adequate.**

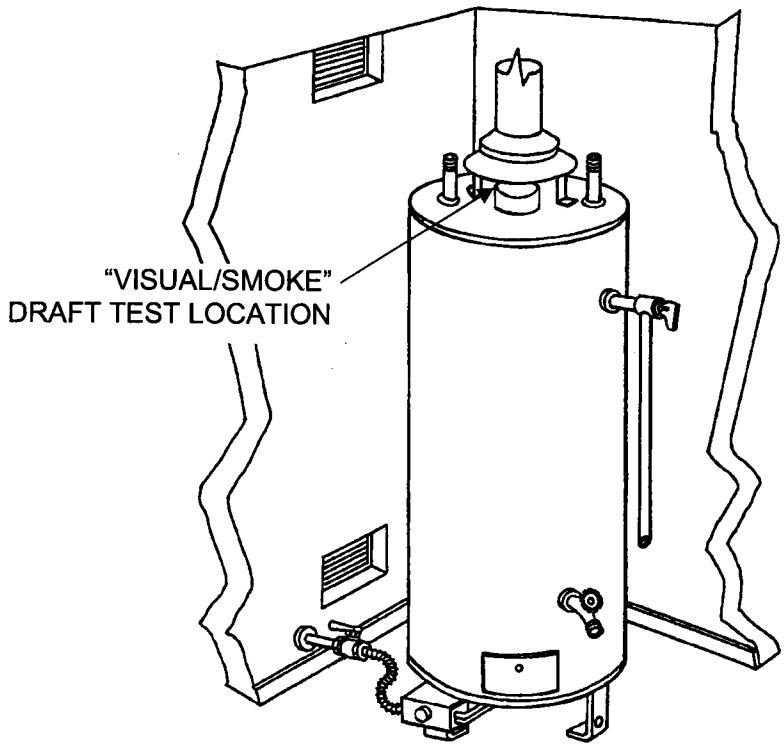

20. CO AND DRAFT TESTING FOR NATURAL GAS LOGS

- **When gas log is the primary heat source:**
  - **Damper must be blocked partially open (e.g., with a damper clip).**
  - **Opening shall be sufficient to prevent spillage of combustion products into the room.**
- **Fireplace glass doors shall be open during tests.**
- **Exhaust/Flue CO Test**
  - **Gas burner shall be operated for a minimum of 5 minutes before checking CO.**
  - **CO shall be sampled just inside the fireplace opening at least 12" above the flame.**
  - **If CO exceeds action level after 5 minutes, warm up time shall be increased (up to 30 minutes) and unit shall be retested.**
  - **Service by a utility gas service technician (or designee) is required if CO exceeds action level.**
- **CO Action Level**
  - **25 ppm As Measured.**
  - **400 ppm Air Free.**
- **Visual/Smoke Draft Test**
  - **Smoke shall be applied along the top of the fireplace opening.**
  - **Draft is adequate <u>only if</u> smoke is drawn inward along the entire fireplace opening.**

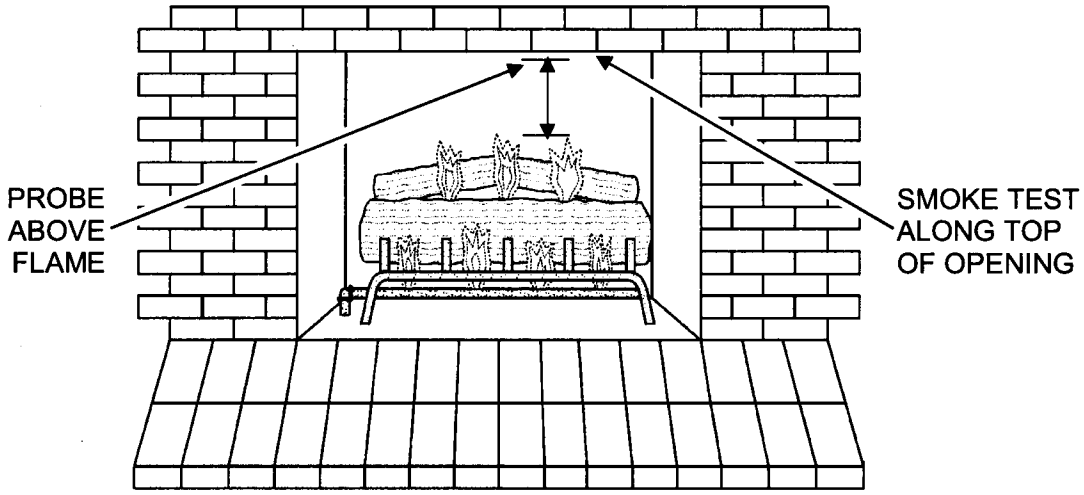

21. MULTIPLE APPLIANCES SHARING A COMMON VENT

- **Draft Tests**
  - **All commonly-vented natural gas appliances shall be operating simultaneously during Draft tests.**

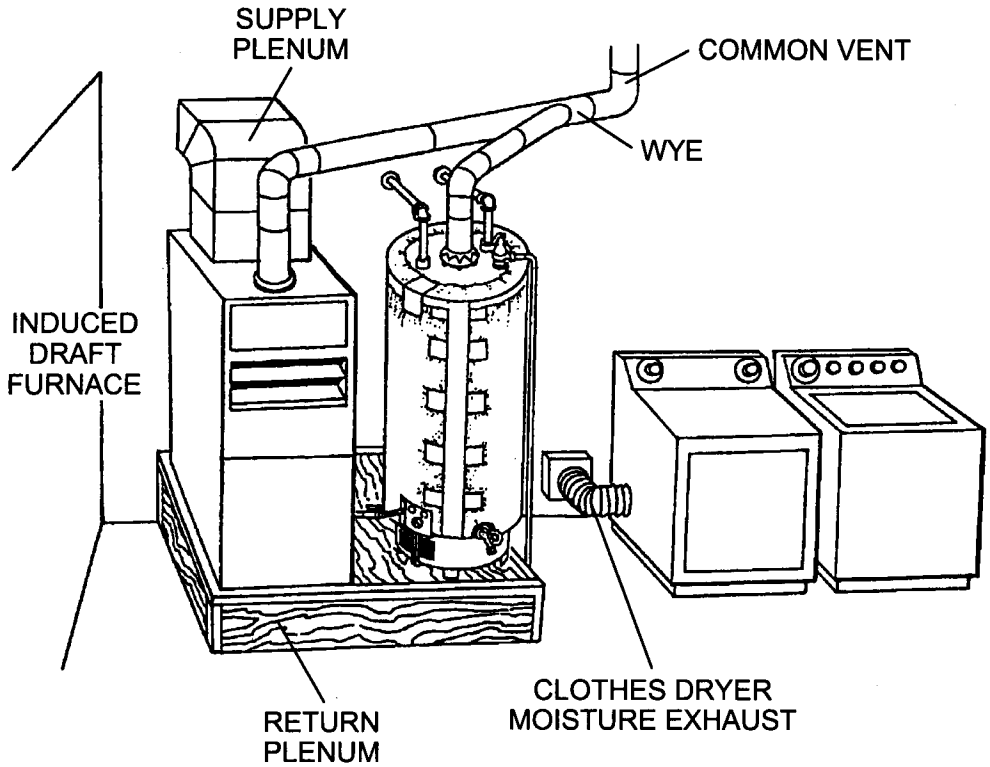

22. ADDITIONAL APPLIANCE EXAMINATIONS

- **Burner Performance**
  - **When the burner(s) ignite, checks shall be made for:**
    - **Delayed ignition.**
    - **Excessive roll-out.**
  - **Burner(s) shall be examined for flame abnormalities, including:**
    - **Large yellow flame (more than 50% yellow).**
    - **Soft lazy flame or smothering flame.**
- **Heat Exchanger Examination on Natural Gas Forced Air Heating Systems**
  - **Each accessible heat exchanger shall be inspected for cracks with a mirror and strong light.**
  - **The unit shall be further examined/serviced by a utility gas service technician (or designee) if any of the following conditions is present:**
    - **Flame interference caused by the air handler in an FAU.**
    - **A visually-detected crack.**
    - **Other evidence of a defective heat exchanger.**
- **If a defect exists, the condition shall be corrected by a utility gas service technician (or designee), or designated contractor licensed to repair HVAC appliances.**

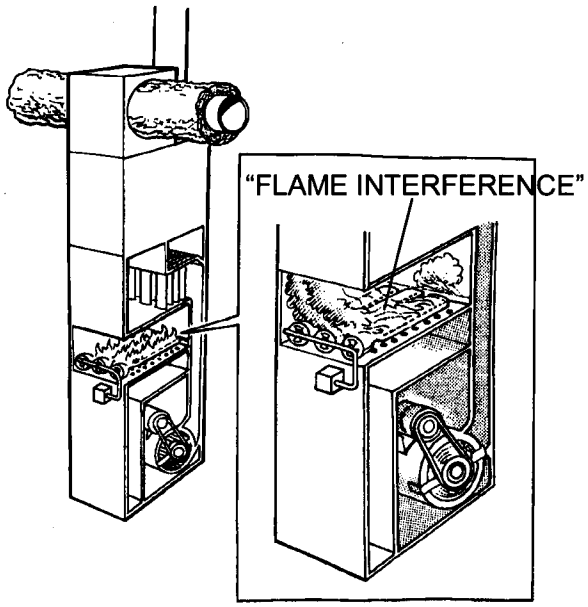

23. FLUE AND VENT SYSTEM REPAIR

- **Draft Hoods**
  - **The following conditions must be corrected:**
    - **Improperly installed or positioned draft hood.**
    - **Multiple (stacked) draft hoods on a single appliance.**
    - **No draft hood present where one is required.**
- **Repairing Flue and Vent Systems**
  - **New components shall conform to applicable codes.**
  - **All single-wall flue and vent pipe joints and connections shall be secured with 3 sheet metal screws (spaced as evenly as possible) where:**
    - **New components are installed.**
    - **Existing connections are loose and unsafe.**
  - **Double-wall Class B and BW flue and vent pipes shall <u>not</u> be drilled or have screws installed <u>if</u> doing so is prohibited by the pipe manufacturer or local code.**

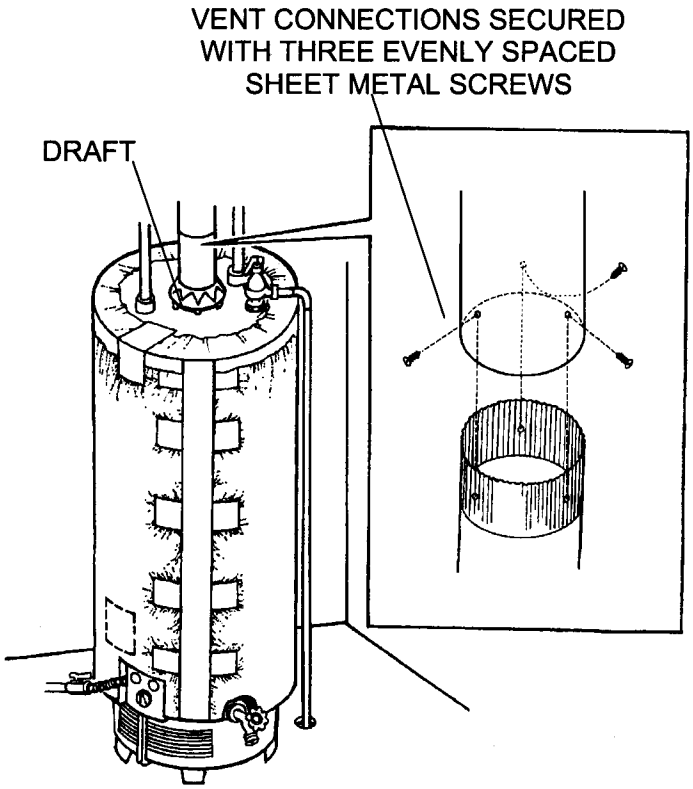

PART 5: POST-REPAIR/REPLACEMENT CHECKS

24. QUALITY ASSURANCE TESTING

- **Natural gas appliances that have been repaired or replaced shall be checked for proper operation, which includes:**
  - **No gas leaks (Item 26)**
  - **Adequate Draft (Item 27)**
  - **Acceptable level of Carbon Monoxide (Item 28).**
- **Problems identified during post-repair/replacement checks must be corrected.**

25. TEST CONDITIONS FOR POST-REPAIR/REPLACEMENT CO AND DRAFT TESTING

- **Door/Window Positions for Tests in the Living Space**
  - **The following shall be closed:**
    - **All exterior doors and windows.**
    - **Doors to rooms containing a supply register when a central return is outside the room.**
    - **Appliance enclosure doors (except during tests).**
  - **The following shall be open:**
    - **Doors to all other living areas and rooms.**
    - **Door to utility room with clothes dryer exhausted outdoors. *Exception:* When a natural draft appliance in that room is tested, the door shall be closed.**
- **Door/Window Positions for Tests in an Unconditioned Garage**
  - **Drive-through door and windows are closed during all tests.**
  - **Door into the living space shall be opened when exhaust devices are in the living space or an FAU is present.**
  - **All exhaust devices in the living space and the garage shall be operating.**

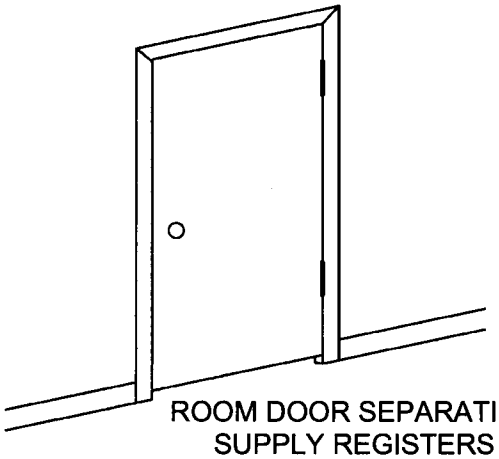

ROOM DOOR SEPARATING SUPPLY REGISTERS FROM A CENTRAL RETURN

25. TEST CONDITIONS FOR POST-REPAIR/REPLACEMENT CO AND DRAFT TESTING (continued)

- **Appliances Located in Attic and Crawl-space**
  - **Devices exhausting into the attic/crawlspace shall be off during Draft Tests on appliances in those locations.**
- **The following <u>must</u> be operating during tests:**
  - **FAU air handler.**
  - **All devices that exhaust air from the space containing an appliance being tested (*exclude* whole house fan).**
- **FAU air filter(s) must be clean or shall be removed prior to testing.**
- **Supply registers shall be open.**
  <u>Exception</u>: **Supply register(s) shall be closed when located in a utility room or basement containing a natural draft appliance.**
- **If an interior cooler cover is available, it shall be in place.**

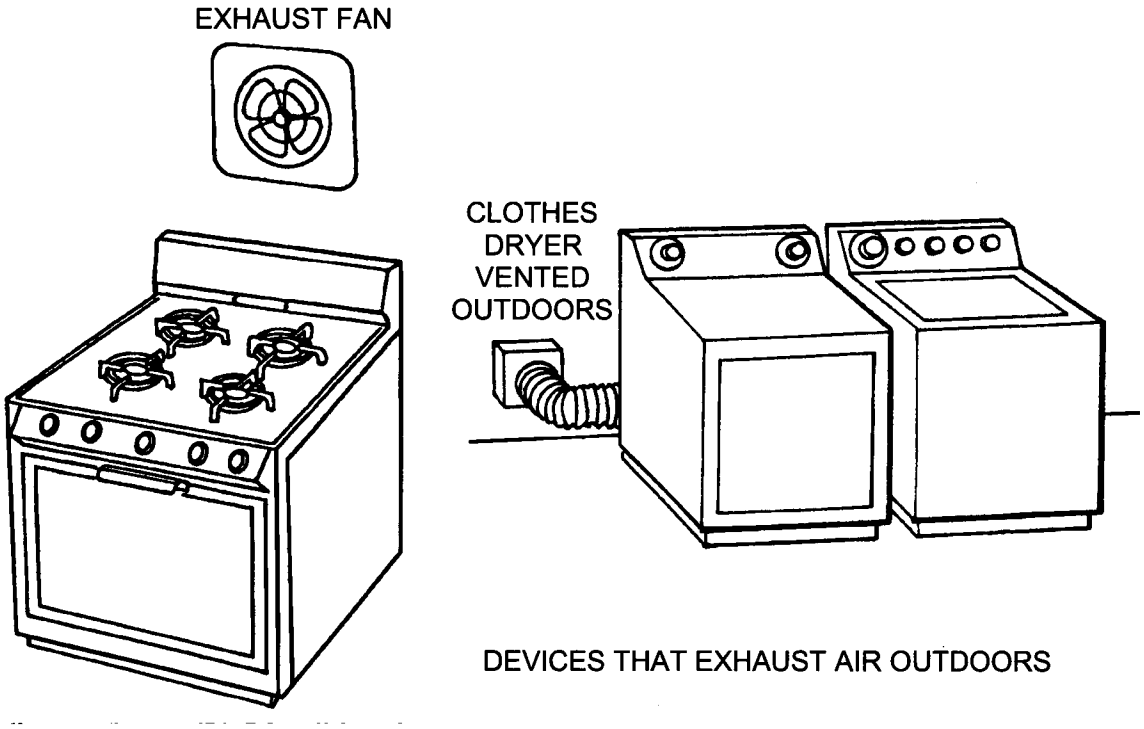

DEVICES THAT EXHAUST AIR OUTDOORS

26. GAS LEAKS

- **Repaired/replaced appliances shall be checked for natural gas leaks using one or more of the following methods:**
  - **Olfactory (Sniff) Test performed above, but within 2' of, all valves and fittings.**
  - **Application of leak detection liquid to line valves and to fittings on valves, flexible gas connectors, and pipes.**
  - **Air sampling with electronic leak detection equipment near valves, fittings, flexible gas connectors, and pipes.**
- **Gas leaks shall be repaired.**

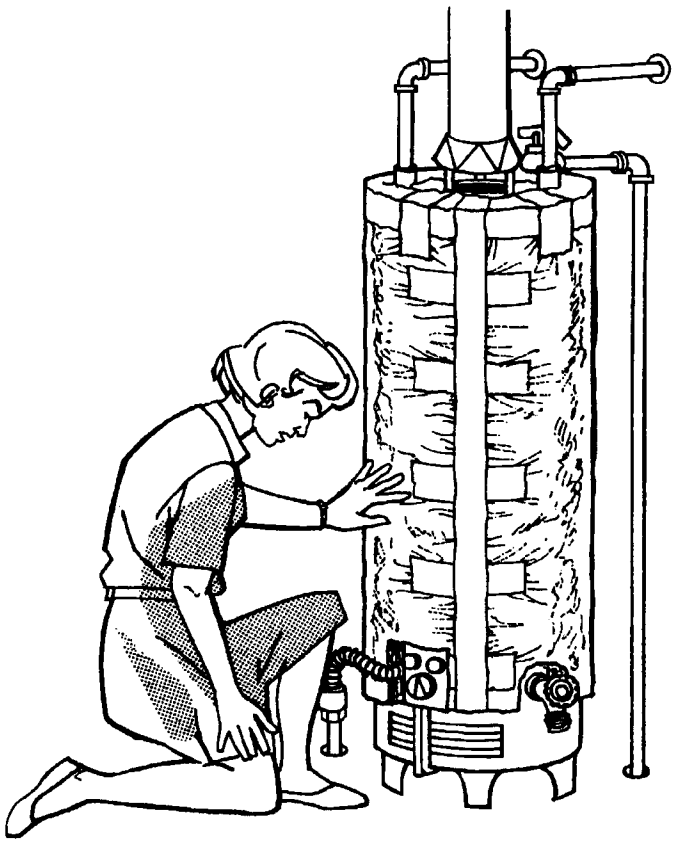

CHECKING FOR NATURAL GAS ODOR

27. DRAFT EXAMINATION

- **Natural Gas Open Combustion Heating Systems and Water Heaters**
  - **Test conditions prescribed in Item 25 shall first be established.**
  - **Draft tests shall be performed after a minimum of 5 minutes of appliance operation.**
  - **Visual/Smoke Draft Test shall be performed on Natural Draft appliances.**
    - **Smoke shall be applied along the entire draft hood opening.**
    - **Draft is adequate <u>only if</u> smoke is drawn into the draft hood along the entire draft hood opening.**

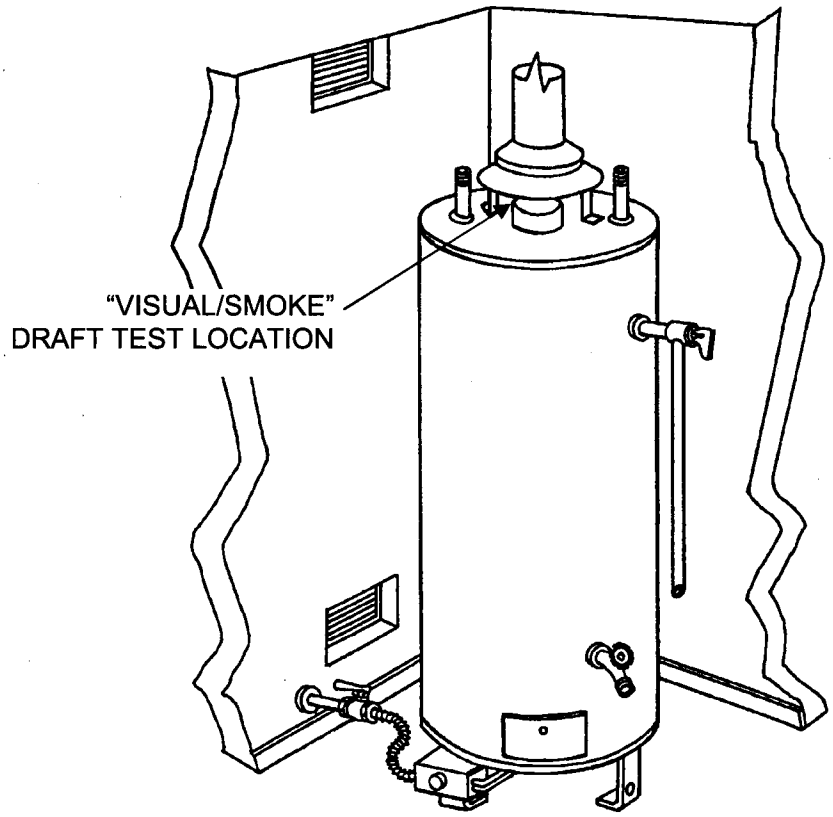

28. CO TESTING FOR NATURAL GAS SPACE AND WATER HEATING SYSTEMS

- **Appliance Ambient CO <u>or</u> Flue CO testing shall be performed.**
- **Appliance Ambient CO Tests**
  - **CO Tests shall be conducted per Items 14 – 18.**
- **Flue CO Tests**
  - **Test conditions prescribed in Item 25 shall first be established.**
  - **CO Tests shall be performed after a minimum of 5 minutes of burner operation.**
  - **Flue Gas CO measurements shall be:**
    - **Taken in combustion gases free of dilution air.**
    - **Conducted in accordance with the Table 29-2.**

Table 29-2: Post-Repair/Replacement Flue CO Testing

APPLIANCE	CO MAXIMUM PPM		NATURAL DRAFT MEASUREMENT LOCATION*
	"AS MEASURED"	"AIR FREE"	
Forced Air Furnace	—	400	Inside each exhaust port separately
Gravity Furnace	—	400	Inside each exhaust port separately
Wall Furnace	—	200	Inside flue on each side of baffle
Wall Furnace (Direct Vent)	—	400	*
Floor Furnace	—	400	Inside each exhaust port separately
Vented Room Heater	—	200	Inside each exhaust port separately
Water Heater	—	200	Inside flue on each side of baffle
Oven/Broiler	225	—	Inside exhaust port
Top Burners and Griddle	25 (per burner)	—	Burner: 12" above flame Griddle: Inside port opening
Gas Log	25	400	Inside top edge of fireplace opening

*For Induced Draft and Closed Combustion appliances, flue gas CO is measured at the flue termination when it is accessible from the ground.

SEE SEPARATE "NONFEASIBILITY CRITERIA" WORD DOCUMENT FOR THE NONFEASIBILITY PAGE TO THIS SECTION

APPENDIX -A-

COMBUSTION AND VENTILATION AIR (CVA) REQUIREMENTS FOR GAS FURNACES/HEATERS AND WATER HEATERS

APPENDIX -A-

COMBUSTION AND VENTILATION AIR (CVA) REQUIREMENTS FOR NATURAL GAS FURNACES/HEATERS & WATER HEATERS

1.0 PURPOSE

This appendix is based on Chapter 7 of the 2001 California Mechanical Code (CMC) and Chapter 3 of the 2003 International Fuel Gas Code (IFGC). It is a quick reference to determine room volume or vent size requirements for open combustion *furnaces and water heaters*. This appendix does not apply to direct vent appliances and other closed combustion units drawing air from outdoors, nor to listed cooking appliances, refrigerators, and domestic clothes dryers. *This is only a guide. Each installer is responsible for meeting all requirements of the local jurisdiction.*

2.0 DEFINITIONS (ALSO SEE CMC CHAPTER 2)

Confined Space: A room or space having a volume of *less* than 50 cubic feet per 1,000 Btu/hr of the aggregate input rating of all fuel-burning open combustion furnaces/heaters and water heaters installed in that space.

Unconfined Space: A room or space having a volume of at least 50 cubic feet per 1,000 Btu/hr of the aggregate input rating of all fuel-burning open combustion furnaces/heaters and water heaters installed in that space. Adjacent rooms communicating directly with the space and not separated by doors are considered part of the unconfined space. Applies to homes of ordinary tightness.

Homes of Ordinary Tightness: Homes not of unusually tight construction.

Homes of Unusually Tight Construction: Homes with the following construction features: (a) walls and ceilings exposed to the outside atmosphere have a continuous water vapor retarder rated 1 perm or less, with all openings sealed; (b) weatherstripping on openable windows and doors; and (c) caulking or sealants are applied to areas such as joints around window and door frames, between sole plates and floors, between wall-ceiling joints, between wall panels, and at plumbing/wiring penetrations & other openings. Combustion air must be obtained from outdoors.

NFVA: Net Free Venting Area. This is the area of the vent opening *minus* the blocking effect of the screen and/or louvers present in the vent (see "Louvers, Grilles, and Screens" below).

3.0 CALIFORNIA MECHANICAL CODE (CMC) CRITERIA

Some code requirements for combustion air are addressed in this section and in footnotes on page A-3. Formulas used to calculate room volume and vent size are shown in Section 4.0.

Louvers, Grilles, and Screens. (CMC 702.3 & 2003 IFGC 304.10) Combustion air openings to *outdoors* must be covered with 1/4-inch mesh (except ducts that terminate in an attic, which are not screened on either end). The blocking affect of louvers, grilles, and screens must be deducted from the area of a vent opening to determine the "net free" venting area (NFVA) of the vent. When NFVA is not labeled on the vent, it may be estimated using the following table. Multiply the area of the *opening* by the applicable "reduction factor" from the table. Example: If a vent with 1/4" screen and metal louvers has a 100 sq. in. opening, then [(100 sq. in.) x (0.75) = 75 sq. in. NFVA].

SUGGESTED SCREEN AND LOUVER REDUCTION FACTORS FOR COMBUSTION AIR VENTS

1/4" Screen (Hardware Cloth)	1/4" Screen with Metal Louvers	1/4" Screen with Wood Louvers	Insect Screen (Mesh under 1/4")	Insect Screen w/ Metal Louvers	Insect Screen w/ Wood Louvers
0.90 (90%)	**0.75** (75%)	**0.25** (25%)	**0.50** (50%)	**0.50** (50%)	**0.25** (25%)

Prohibited Sources. (CMC 703.3) Vent openings and ducts cannot connect an appliance enclosure with a space in which the operation of a fan may adversely affect the flow of combustion air.

Combustion-Air Ducts. (CMC Section 704) Ducts must be galvanized steel or equivalent corrosion-resistant material approved for the use. A duct must have the same cross-sectional area as the free area of the opening to which it connects.

4.0 USING THE CVA REQUIREMENTS MATRIX (PAGE A-3)

Column [A] in the CVA Requirements matrix lists several Btu/hour Input Rating totals. Columns [B] through [F] list corresponding room volumes (cu. ft.) and vent and duct sizes (sq. in. of NFVA). For Btu/hr totals not shown, the required room volume or vent/duct NFVA can be calculated using the applicable formula from the table below. (Note: "KBtu" = 1,000 Btu/hr Input.)

Column	Application	CVA Requirement [Formula in Brackets]
[B]	All air from **indoors**, based on room volume [1]	**50 cu. ft. of room volume per 1,000 Btu/hr input. [NFVA = KBtu x 50] or [Btu / 2, and drop last zero]**
[C]	All air from **indoors**, with 1 upper vent (within 12" of the ceiling) and 1 lower vent (within 12" of the floor) venting to another room/space	When volume of the room/space containing an appliance is inadequate, an upper and a lower vent may be installed into an adjacent space with sufficient volume. Each vent must provide **1 sq. in NFVA per 1,000 Btu/hr input**, with a *minimum* size of 100 sq. in. **[NFVA = 100 + KBtu over 100]**
[D]	All air from **outdoors**, using 1 upper vent or duct [2]	1 upper opening (or vertical or horizontal duct) may be used to provide the combustion air (lower vent not required). The vent/duct must provide **1 sq. in NFVA per 3,000 Btu/hr input. [NFVA = KBtu / 3]**
[E]	All air from **outdoors**, using 1 upper vent or vertical duct and 1 lower vent or vertical duct [3]	Each opening and *vertical* duct must provide **1 sq. in NFVA per 4,000 Btu/hr input. [NFVA = KBtu / 4]**
[F]	All air from **outdoors**, using 1 upper horizontal duct and 1 lower horizontal duct [3]	Each *horizontal* duct must provide **1 sq. in NFVA per 2,000 Btu/hr input. [NFVA = KBtu / 2]**

[1] When total indoor volume is inadequate, supplementary air may be obtained from *outdoors* through a duct or opening with NFVA of 1 sq. in. per 5,000 Btu/hr input (per CMC Table 7-1). (Also see 2003 IFGC 304.7.)
[2] See footnote 1 on page A-3 regarding criteria for using just *one upper* combustion air vent or duct.
[3] See footnote 5 on page A-3 about acceptable locations for upper and lower vents and ducts to outdoors.

The following table shows **cross-sectional area of a duct** when the diameter or circumference is known. [Duct area equals πr^2, or 3.1415 x the radius squared (radius is half the diameter). When circumference is known, divide it by 3.1415 to determine the diameter, then calculate the area.] Example: A duct's diameter is 6" (or circumference is 18.8"). Go to 6" in the top row, and find the area (28.3 sq. in.) directly below. Or go to 18.8" in the bottom row, and find 28.3 directly above.

Duct Diameter (in.)	3"	4"	5"	6"	7"	8"	9"	10"
Duct Area (sq. in.)	**7.1**	**12.6**	**19.6**	**28.3**	**38.5**	**50.3**	**63.6**	**78.5**
Duct Circumference (in.)	9.4"	12.6"	15.7"	18.8"	22.0"	25.1"	28.3"	31.4"

CVA Requirements for Gas Furnaces/Heaters & Water Heaters

Open Combustion Furnace and/or Water Heater in a Room/Space	Homes of **Ordinary Tightness***, with appliances located in a confined space*, and all combustion air obtained from indoors		Homes of **Unusually Tight Construction***, or of **Inadequate Volume**, with All Combustion Air Obtained from Outdoors		
			[D] 1 Upper Opening (or 1 Vertical or Horizontal Duct) 1,2,3,4,5 [E] 1 Upper Opening or **Vertical** Duct and 1 Lower Opening or Vertical Duct 2,3,4,5,6		Two **Horizontal** Ducts 2,5
Total Input	Min. Room Volume	Min. NFVA* per Vent	Min. NFVA* for 1 Vent/**Vertical** Duct	Min. NFVA* for each of 2 Vents/**Vertical** Ducts	Required NFVA* per Duct for 2 Ducts
[A] Btu/hr	**[B] Cu. Ft.**	**[C] Sq. In.**	**[D] Sq. In.**	**[E] Sq. In.**	**[F] Sq. In.**
20,000	1,000	100	6.7**	5.0**	10.0
25,000	1,250	100	8.3**	6.3**	12.5
30,000	1,500	100	10.0	7.5**	15.0
35,000	1,750	100	11.7	8.8**	17.5
40,000	2,000	100	13.3	10.0	20.0
45,000	2,250	100	15.0	11.3	22.5
50,000	2,500	100	16.7	12.5	25.0
55,000	2,750	100	18.3	13.8	27.5
60,000	3,000	100	20.0	15.0	30.0
65,000	3,250	100	21.7	16.3	32.5
70,000	3,500	100	23.3	17.5	35.0
75,000	3,750	100	25.0	18.8	37.5
80,000	4,000	100	26.7	20.0	40.0
85,000	4,250	100	28.3	21.3	42.5
90,000	4,500	100	30.0	22.5	45.0
95,000	4,750	100	31.7	23.8	47.5
100,000	5,000	100	33.3	25.0	50.0
105,000	5,250	105	35.0	26.3	52.5
110,000	5,500	110	36.7	27.5	55.0
115,000	5,750	115	38.3	28.8	57.5
120,000	6,000	120	40.0	30.0	60.0
125,000	6,250	125	41.7	31.3	62.5
130,000	6,500	130	43.3	32.5	65.0
135,000	6,750	135	45.0	33.8	67.5
140,000	7,000	140	46.7	35.0	70.0
145,000	7,250	145	48.3	36.3	72.5
150,000	7,500	150	50.0	37.5	75.0
155,000	7,750	155	51.7	38.8	77.5
160,000	8,000	160	53.3	40.0	80.0

[1]Just one opening (or one vertical or horizontal duct) in or within 12" of the ceiling is allowed when the appliance has clearances of 1" on sides and back and 6" in front. Vent/duct NFVA must equal the sum of the vent connector areas.

[2]Combustion air must be obtained air from outdoors or from spaces freely communicating with outdoors.

[3]Attic must be adequately vented to provide the required volume of combustion air. Attic must have at least 30" clear vertical height at the peak. Vent openings must be protected from ceiling insulation (e.g., with sleeve 6" above it).

[4]Vertical ducts must extend 6" above ceiling insulation, and may not be screened on either end.

[5]Upper vent/duct shall be installed in the ceiling or within 12" of the ceiling, and lower vent/duct shall be in the floor or within 12" of the floor. However, a pre-existing upper vent is acceptable at any location higher than the draft hood.

[6]Crawl space must have free flow of air and unobstructed openings to outdoors. Foundation vents should be screened with 1/4" mesh and must provide at least twice the NFVA of the required CVA openings.

*See definitions on page A-1. **The minimum cross-sectional dimension of **ducts** is 3". Minimum **rectangular duct** is 3"x3" (**9.0 sq. in.**); minimum **round duct** is 3" diameter (πr^2 = 3.1415 x 1.5" x 1.5" = **7.07 sq. in.**).

APPENDIX -D-

METHODS FOR ESTIMATING AND MEASURING AIRFLOW

CONTENTS

PART I: SUGGESTED METHODS FOR ESTIMATING AIRFLOW

1. Air Conditioning Capacity (Tons)
   - The Preston Guide or Carrier Blue Book
   - Model Number Nomenclature
2. Heating System Capacity (kBtuh)
   - Btu Output of Gas Furnace
   - Wattage of Electric Furnace

PART II: APPROVED METHODS FOR MEASURING AIRFLOW

1. Flow Grid Measurement
2. Plenum Pressure Matching Measurement (Duct Tester Used as a Powered Capture Hood)
3. Using A Flow Capture Hood

METHODS FOR ESTIMATING AND MEASURING AIRFLOW

PART I – METHODS FOR *ESTIMATING* AIRFLOW

1. METHODS

- **The following methods are outlined in this Appendix:**
  - Air Conditioning Capacity (Tons)
    - The Preston Guide or Carrier Blue Book
    - Model Number Nomenclature
  - Heating System Capacity (kBtuh Output)
    - Btuh Output of Gas Furnace
    - Wattage of Electric Furnace
- **Air Conditioner or Heat Pump**
  - AC/HP unit capacity may be determined by the following methods using information obtained from the condenser nameplate:
    - The Preston Guide or Carrier Blue Book
    - Model Number Nomenclature
- **Gas or Electric Furnace**
  - Furnace capacity may be determined by using the unit's Btuh Output.
    - Gas: Directly from the nameplate
    - Electric: Wattage converted to Btuh Output

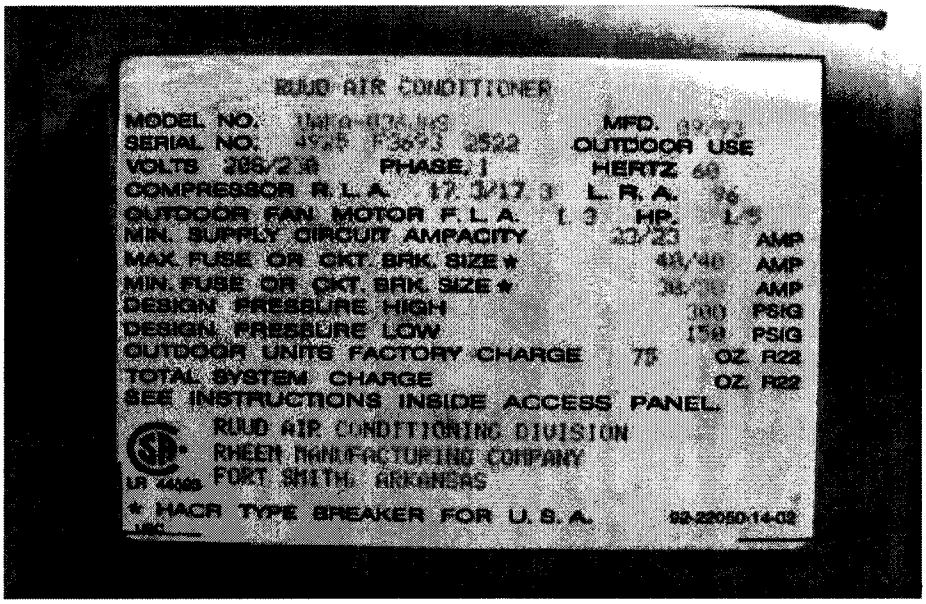

EXAMPLE OF A CONDENSER NAMEPLATE

2. AIR CONDITIONER AND HEAT PUMP UNITS

- **Method A—Preston Guide or Carrier Bluebook**
  - **Step A-1:** Determine the model number and date of manufacture from the condenser nameplate.

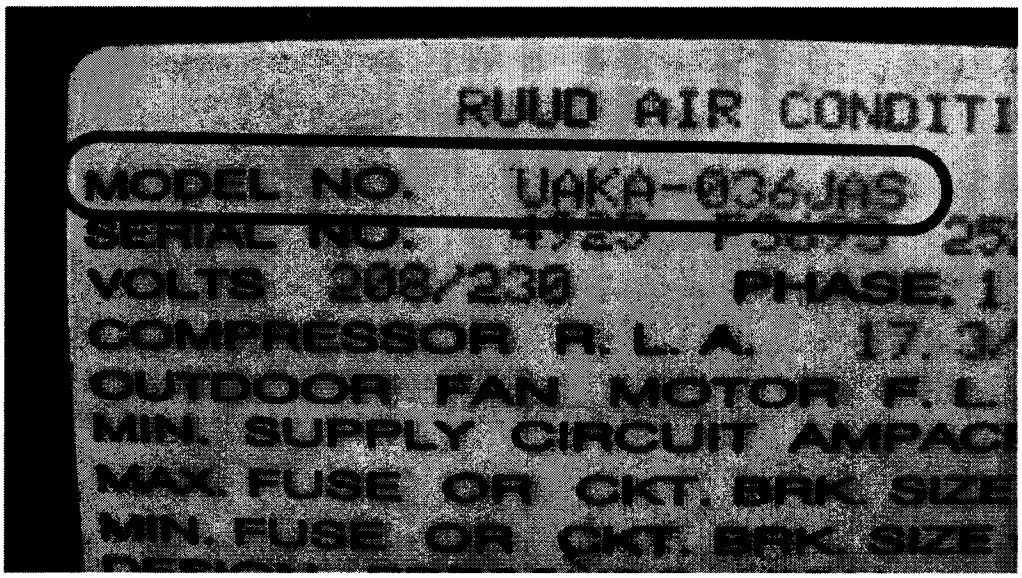

NAMEPLATE SHOWS MODEL NUMBER TO BE "UAKA-036JAS"

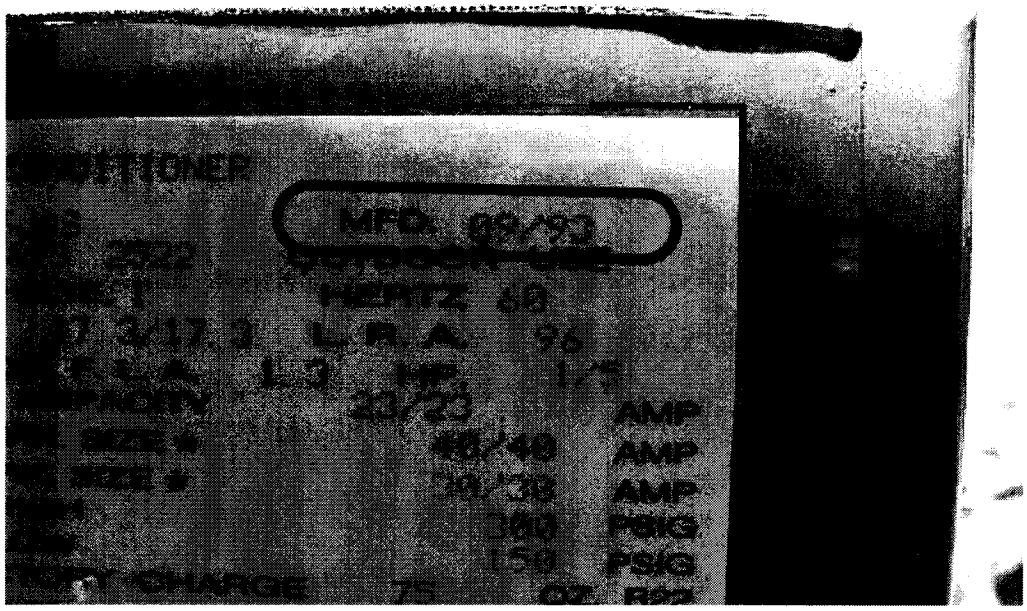

NAMEPLATE SHOWS DATE OF MANUFACTURE TO BE "09/93"

2. AIR CONDITIONER AND HEAT PUMP UNITS (continued)

- **Method A—Preston Guide or Carrier Bluebook (continued)**
  - **Step A-2:** Check the Preston Guide (or Carrier Bluebook) to determine cooling capacity of the unit, based on model number and date of manufacture.
    - Find model number UAKA-036JA manufactured in 1993.
    - Find cooling capacity, which in this example is 34,400 Btu.

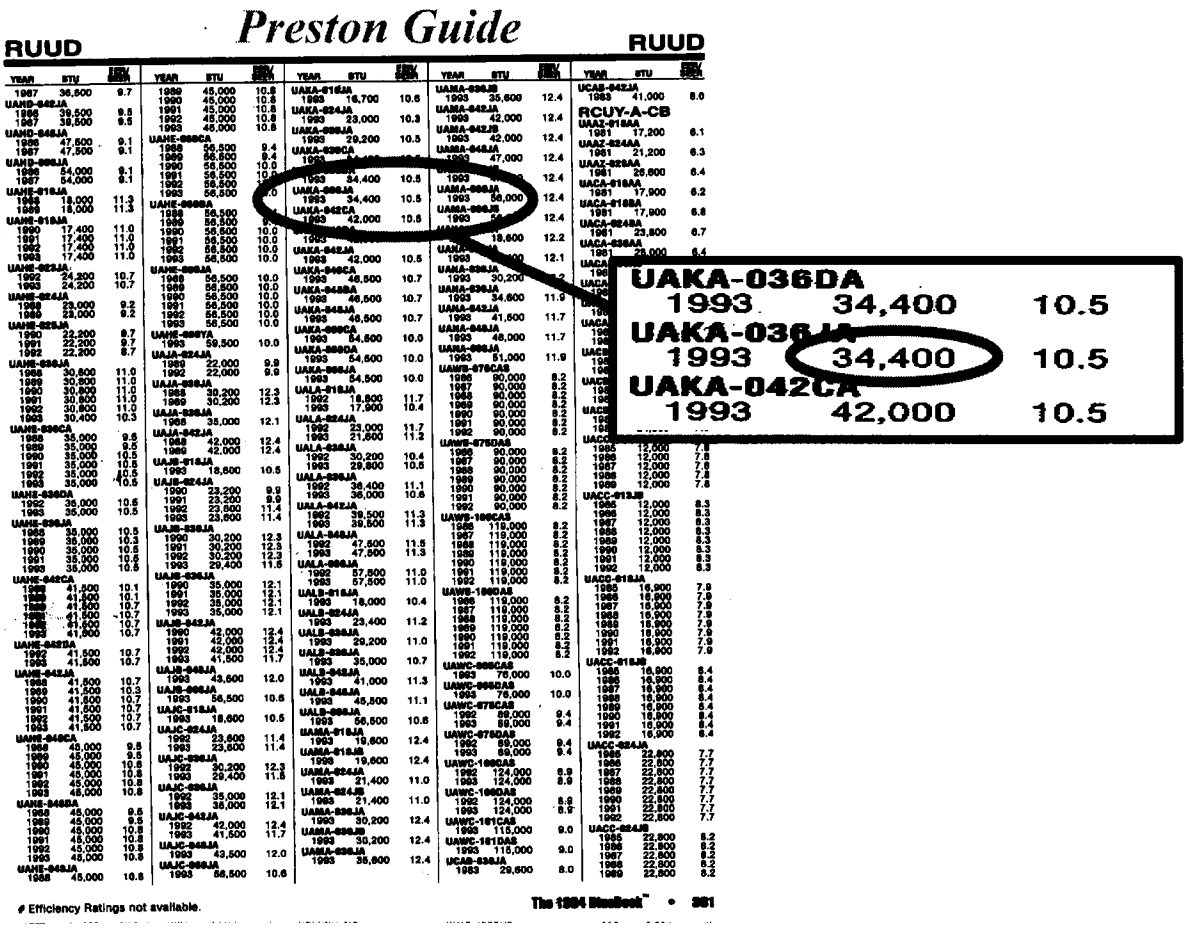

Preston Guide

RUUD

YEAR	BTU	EER
1993	16,700	10.6
UAKA-024JA		
1993	23,000	10.3
UAKA-030JA		
1993	29,200	10.5
UAKA-036CA		
1993	34,400	10.5
UAKA-036JA		
1993	34,400	10.5
UAKA-042CA		
1993	42,000	10.5
UAKA-042JA		
1993	42,000	10.5
UAKA-048CA		
1993	46,500	10.7
UAKA-048JA		
1993	46,500	10.7
UAKA-060CA		
1993	54,500	10.0
UAKA-060JA		
1993	54,500	10.0
UALA-018JA		
1992	16,800	11.7
1993	17,900	10.4
UALA-024JA		
1992	23,000	11.7
1993	21,600	11.2
UALA-030JA		
1992	30,200	10.4
1993	29,800	10.6
UALA-036JA		
1992	36,400	11.1
1993	35,000	10.8
UALA-042JA		
1992	39,500	11.3
1993	39,500	11.3
UALA-048JA		
1992	47,500	11.5
1993	47,500	11.3
UALA-060JA		
1992	57,500	11.0
1993	57,500	11.0
UALB-018JA		
1993	18,000	10.4
UALB-024JA		
1993	23,400	11.2
UALB-030JA		
1993	29,200	11.0
UALB-036JA		
1993	35,000	10.7
UALB-042JA		
1993	41,000	11.3
UALB-048JA		
1993	45,500	11.1
UALB-060JA		
1993	56,500	10.6
UAMA-018JA		
1993	18,600	12.4
UAMA-024JA		
1993	19,600	12.4
UAMA-024JB		
1993	21,400	11.0
UAMA-024JC		
1993	21,400	11.0
UAMA-030JA		
1993	30,200	12.4
UAMA-030JB		
1993	30,200	12.4
UAMA-036JA		
1993	35,600	12.4
UAMA-036JB		
1993	35,600	12.4
UAMA-042JA		
1993	42,000	12.4
UAMA-042JB		
1993	42,000	12.4
UAMA-048JA		
1993	47,000	12.4
UAMA-048JB		
1993	[illegible]	12.4
UAMA-060JA		
1993	56,000	12.4
UAMA-060JB		
1993	[illegible]	12.4
UAMA-[illegible]	18,600	12.2
UAMA-[illegible]	[illegible]	12.1
UAMA-036JA		
1993	30,200	[illegible]
UAMA-036JA		
1993	34,600	11.9
UAMA-042JA		
1993	41,500	11.7
UAMA-048JA		
1993	46,000	11.7
UAMA-060JA		
1993	51,000	11.9
UAWS-075CAS		
1986	90,000	8.2
1987	90,000	8.2
1988	90,000	8.2
1989	90,000	8.2
1990	90,000	8.2
1991	90,000	8.2
1992	90,000	8.2
UAWS-075DAS		
1986	90,000	8.2
1987	90,000	8.2
1988	90,000	8.2
1989	90,000	8.2
1990	90,000	8.2
1991	90,000	8.2
1992	90,000	8.2
UAWS-100CAS		
1986	119,000	8.2
1987	119,000	8.2
1988	119,000	8.2
1989	119,000	8.2
1990	119,000	8.2
1991	119,000	8.2
1992	119,000	8.2
UAWS-100DAS		
1986	119,000	8.2
1987	119,000	8.2
1988	119,000	8.2
1989	119,000	8.2
1990	119,000	8.2
1991	119,000	8.2
1992	119,000	8.2
UAWC-060CAS		
1993	76,000	10.0
UAWC-060DAS		
1993	76,000	10.0
UAWC-075CAS		
1992	89,000	9.4
1993	89,000	9.4
UAWC-075DAS		
1992	89,000	9.4
1993	89,000	9.4
UAWC-100CAS		
1992	124,000	8.9
1993	124,000	8.9
UAWC-100DAS		
1992	124,000	8.9
1993	124,000	8.9
UAWC-161CAS		
1993	115,000	9.0
UAWC-161DAS		
1993	115,000	9.0
UCAS-036JA		
1983	29,600	8.0
UCAS-042JA		
1983	41,000	8.0
RCUY-A-CB		
UAAZ-018AA		
1981	17,200	6.1
UAAZ-024AA		
1981	21,200	6.3
UAAZ-030AA		
1981	26,600	6.4
UACA-018AA		
1981	17,900	6.2
UACA-018BA		
1981	17,900	6.8
UACA-024BA		
1981	23,800	6.7
UACA-036AA		
1981	28,000	6.4
UACA[illegible]		
1981	[illegible]	[illegible]
UACA[illegible]		
1981	[illegible]	[illegible]
UACA[illegible]		
1981	[illegible]	[illegible]
UACA[illegible]		
1981	[illegible]	[illegible]
UACA[illegible]		
1981	[illegible]	[illegible]
UACA[illegible]		
1981	[illegible]	[illegible]
UACA[illegible]		
1981	[illegible]	[illegible]
UACC[illegible]		
1985	12,000	7.8
1986	12,000	7.6
1987	12,000	7.6
1988	12,000	7.8
1989	12,000	7.6
UACC-013JB		
1985	12,000	8.3
1986	12,000	8.3
1987	12,000	8.3
1988	12,000	8.3
1989	12,000	8.3
1990	12,000	8.3
1991	12,000	8.3
1992	12,000	8.3
UACC-018JA		
1985	16,900	7.9
1986	16,900	7.9
1987	16,900	7.9
1988	16,900	7.9
1989	16,900	7.9
1990	16,900	7.9
1991	16,900	7.9
1992	16,900	7.9
UACC-018JB		
1985	16,900	8.4
1986	16,900	8.4
1987	16,900	8.4
1988	16,900	8.4
1989	16,900	8.4
1990	16,900	8.4
1991	16,900	8.4
1992	16,900	8.4
UACC-024JA		
1985	22,800	7.7
1986	22,800	7.7
1987	22,800	7.7
1988	22,800	7.7
1989	22,800	7.7
1990	22,800	7.7
1991	22,800	7.7
1992	22,800	7.7
UACC-024JB		
1985	22,800	8.2
1986	22,800	8.2
1987	22,800	8.2
1988	22,800	8.2
1989	22,800	8.2

UAKA-036DA
1993 34,400 10.5
UAKA-036JA
1993 34,400 10.5
UAKA-042CA
1993 42,000 10.5

Efficiency Ratings not available.

The 1994 BluBook™ • 381

DATA FROM THE PRESTON GUIDE SHOWS
UNIT'S COOLING CAPACITY TO BE 34,000 BTU

2. AIR CONDITIONER AND HEAT PUMP UNITS (continued)

- **Method A—Preston Guide or Carrier Bluebook (continued)**
  - **Step A-3:** Calculate cooling capacity in tons based on KBtu.
    - Per the Preston Guide, unit cooling capacity = 34,400 Btu
    - Divide Unit Capacity by 12,000 Btu/ton to convert Btu to tons: [34,400 Btu ÷ 12,000 Btu/ton = 2.87 tons]
    - Establish tons of cooling capacity:
      - Round up to 3 tons, or
      - Find "Nominal Tons" using the chart in Figure D-1.
- **Method B—Model Number Nomenclature**
  - This method may be used when KBtu can be determined from the model number.
  - **Step B-1:** Locate model number on the condenser name plate.
    - Refer to the nameplate pictured on pages D-2 and D-3.
    - In this example, the model number is "UAKA-0**36**JAS".
  - **Step B-2:** Establish cooling capacity in Btu.
    - **36** is the capacity of the unit, and
    - That is equivalent to 36,000 Btu.
  - **Step B-3:** Divide unit capacity in Btu by 12,000 Btu/ton to determine cooling capacity in tons:
    - [36,000 Btu ÷ 12,000 Btu/ton = 3 tons]
    - Cooling capacity is 3 tons.

FIGURE D-1: NOMINAL TONS BASED ON UNIT CAPACITY IN BTU

UNIT CAPACITY (BTU)	CALCULATED TONS	NOMINAL TONS
14,000 – 21,999	1.17 – 1.82	1.5
22,000 – 26,999	1.83 – 2.24	2.0
27,000 – 32,999	2.25 – 2.74	2.5
33,000 – 38,999	2.75 – 3.24	3.0
39,000 – 44,999	3.25 – 3.74	3.5
45,000 – 53,999	3.75 – 4.49	4.0
54,000 – 62,999	4.50 – 5.24	5.0

3. FURNACES

- **System G: Determining Estimated Airflow for Gas Furnaces**
  - **Step G-1:** Determine Btuh output from unit name plate.
    - Locate Btuh output on the nameplate (see picture below).
      - Output is 80,000 Btuh in this example.
    - If only Input is listed, Output = Input x (% efficiency).
      - Example: (100 kBtuh Input) x (0.80 AFUE) = 80 kBtuh.
  - **Step G-2:** Convert Btuh output to estimated airflow in cfm.
    - Assume 21.7 cfm per kBtuh.
    - Use the following equation to determine estimated airflow: [Output kBtuh x 21.7 cfm/kBtuh = cfm system airflow]
    - Example: [80 (kBtuh) x 21.7 (cfm/KBtu) = 1,736 cfm system airflow]

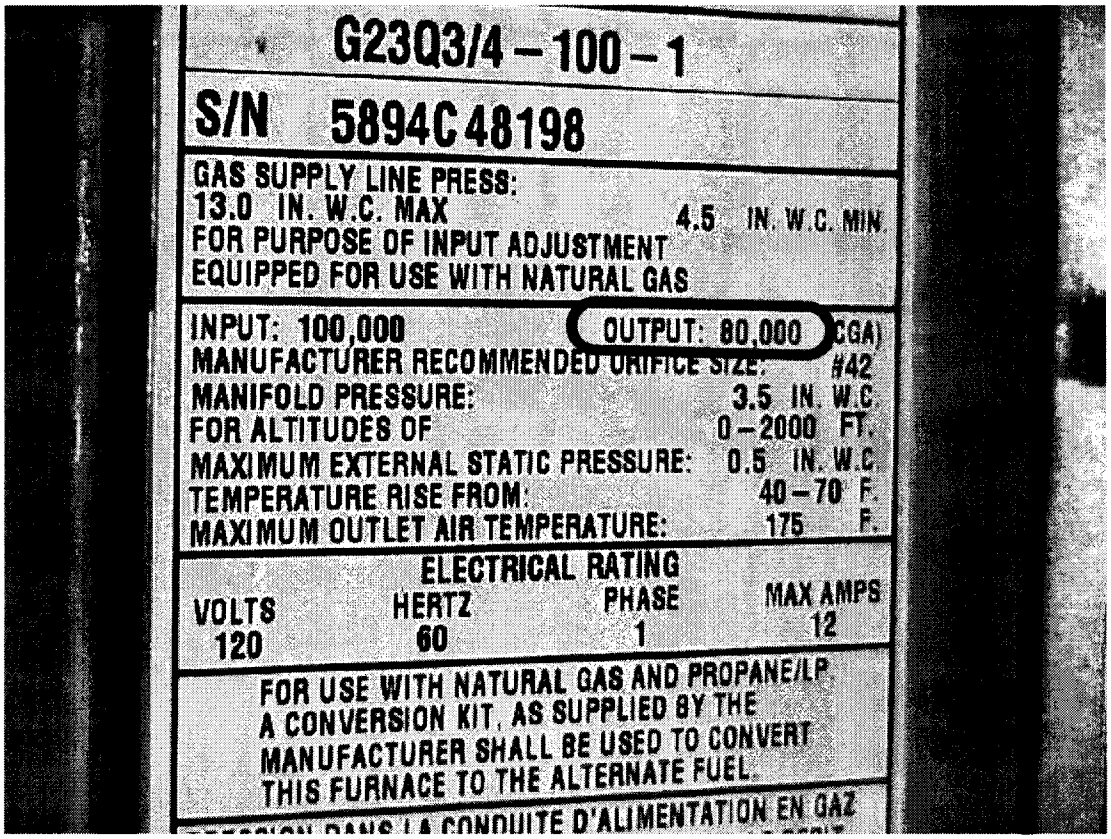

EXAMPLE OF A GAS FURNACE NAMEPLATE SHOWING HEATING CAPACITY (OUTPUT) OF 80,000 BTUH

3. **FURNACES (continued)**
   - **System E: Determining Estimated Airflow for Electric Furnaces**
     - **Step E-1:** Determine wattage from unit name plate.
       - Locate heating capacity (in kilowatts) on the nameplate (see graphic below).
       - Heating Capacity (output) is 20 kilowatts in this example

       - **Step E-2:** Convert kilowatts to kBtuh output to estimated airflow in cfm, assuming 3.413 kBtuh per kilowatt and 95% efficiency.
       - Use the following formula to convert wattage to kBtuh output:
         - [(watts x 3.413 x 0.95) ÷ 1,000 = kBtuh output] or
         - [(kilowatts x 3.242) = kBtuh output]
         - In this example:
           [20 (kW) x 3.242 = 64.84 kBtuh output].
     - **Step E-3:** Convert kBtuh output to estimated airflow in cfm.
       - Assume 21.7 cfm per kBtuh.*
       - Use the following equation to determine estimated airflow:
         [kBtuh x 21.7 cfm/kBtuh = cfm system airflow]
       - Example:
         [64.84 (kBtuh) x 21.7 (cfm/KBtu) = 1407 cfm system airflow]

ELECTRIC FURNACE
SIMULATED NAMEPLATE

MANUFACTURED BY XYZ FURNACE CORP.

MODEL # 000000000 SERIAL # 00000000

HEATING CAPACITY: 20 KILOWATTS

EXAMPLE OF AN ELECTRIC FURNACE NAMEPLATE
SHOWING HEATING CAPACITY OF 20 KILOWATTS

*May be used until CEC determines cfm/kBtuh default for electric furnaces.

PART II – METHODS FOR *MEASURING* AIRFLOW

Methods for measuring HVAC system airflow (fan flow) presented in this appendix are methods approved by the California Energy Commission and described in Appendix RE-2005 of the Title 24 "Residential Alternative Calculation Method (ACM) Approval Manual for the 2005 Building Energy Efficiency Standards for Residential and Nonresidential Buildings" — Publication 400-03-003F, available online at: http://www.energy.ca.gov/title24/2005standards/index.html

1. FLOW GRID MEASUREMENT

- **Overview**
  - This method uses a "metering plate" containing "pressure sensing grids", which are directed toward the air handler.
  - The metering plate temporarily replaces the filter in a typical air handler system during the air flow measurement procedure.
    - If the filter location is directly adjacent to the air handler, the metering plate will measure the total air handler flow.
    - If the filter is located remotely at a single central return, the metering plate will measure the air flow through the central return. Airflow measurement through the central return will be very close to the total air handler air flow only if the return duct is very tight.

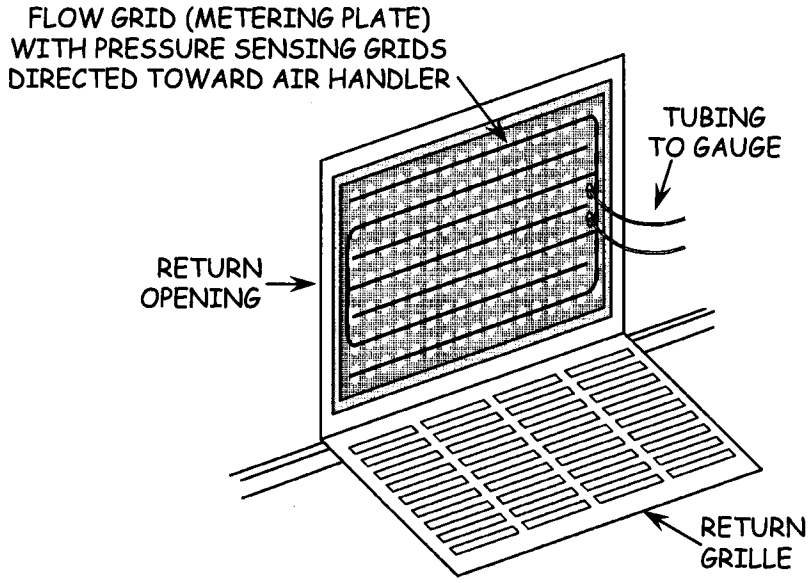

1. FLOW GRID MEASUREMENT (continued)

- **Protocol**
  - Equipment used for measurements shall meet the requirements specified in ACM Residential Manual Appendix RE-2005, §RE.3.1.3, "Flow Grid Measurement."
  - The following general guidelines are for reference only; measurement shall be:
    - Performed in accordance with test equipment manufacturer's instructions, and
    - In harmony with ACM Residential Manual Appendix RE-2005, §RE.4.1.3, "Diagnostic Fan Flow Using Flow Grid Measurement".
- **General Guidelines**
  - **Step 1:** System operating pressure shall be measured with the air handler operating at maximum speed used in the system.
    - Using a digital pressure gauge, pressure difference in Pa shall be measured between the supply plenum and the conditioned space (**P**sp) using a static pressure probe pointing into the air stream.
    - Probe may be placed in the nearest supply duct when access to the supply plenum is unavailable.
    - Probe shall be adjusted to achieve the highest pressure and then secured in place during the fan flow test.

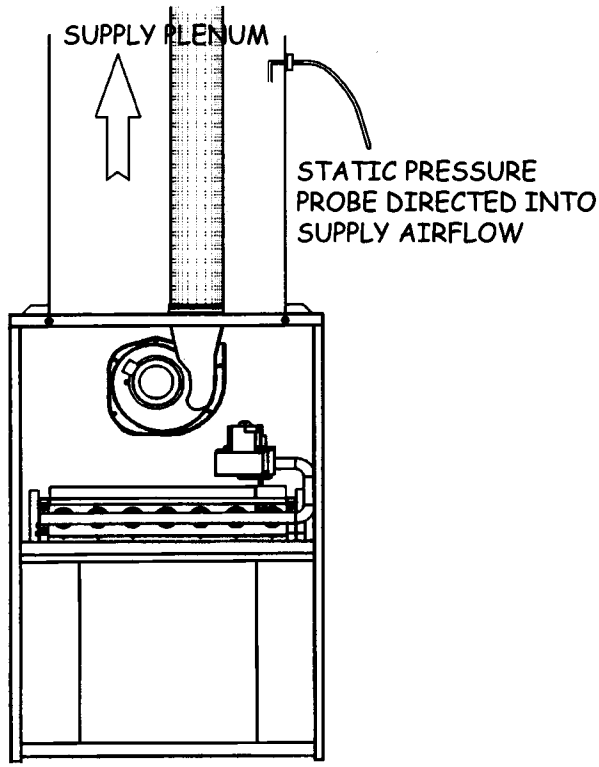

1. **FLOW GRID MEASUREMENT (continued)**
   - **General Guidelines (continued)**
     - **Step 2:** With the air handler off, the flow grid measurement sensor (metering plate) shall be installed, with the pressure sensing grids directed toward the air handler, and with no obstructions within 6" upstream or 2" downstream of the metering plates, in the best available location (filter slot or filter grille) where all system airflow passes through the flow grid:
       - In a filter slot as close to the air handler as possible, or
       - In the filter grille of a single-return duct system, or
       - In each filter grille of a multiple-return duct system simultaneously.

(A) When Using DG-700 Fully-Automated Digital Gauge

- **Step A-3:** Air handler shall be operated again at the same speed as used in Step 1, and time averaging shall be lengthened as needed to maximize accuracy when readings are fluctuating.
- **Step A-4:** Measured system airflow (**Q**ah) shall be obtained from the digital pressure gauge and recorded.
- **Step A-5:** When the flow grid is installed in a remote filter grille, manufacturer's correction factor shall be used to increase accuracy.

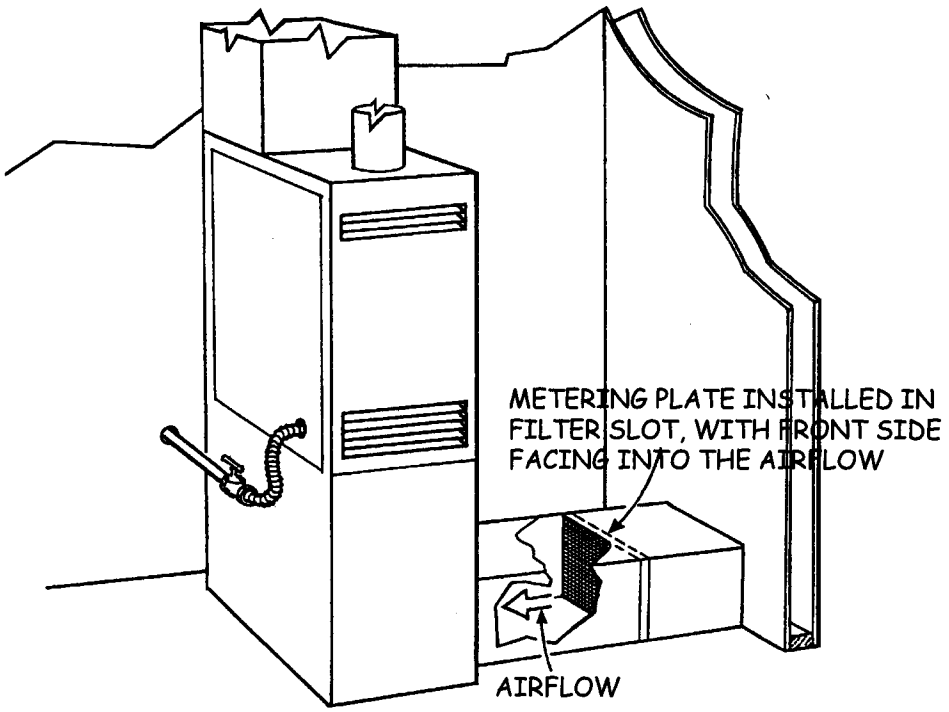

1. FLOW GRID MEASUREMENT (continued)

- **General Guidelines (continued)**

(B) When Using DG-3 Digital Gauge

- **Step B-3:** With air handler operating again at the same speed as in Step 1, measurements shall be made with the flow grid in place:
  - System operating pressure re-measured (**P**test).
  - Airflow through the flow grid measured (**Q**grid).
- **Step B-4:** System Airflow (**Q**ah) shall be calculated by:
  - Multiplying **Q**grid by equipment manufacturer's Flow Resistance Correction Factors (sample shown below), or
  - Applying the following equation to readings obtained in Steps 1 and B-3:

  System Airflow (Air Handler Flow) = **Q**ah = **Q**grid x (**P**sp/**P**test)$^{0.5}$
- **Step B-5:** When the flow grid is installed in a remote filter grille, manufacturer's correction factor shall be used to increase accuracy.

All Gauges

- **Step 6:** Adjusted Airflow shall be calculated (to correct for differences in system operating pressures measured in Steps 1 and 3) using manufacturer's flow resistance correction procedure.

Appendix B **Flow Resistance Correction Factors**

Table B.1 Flow Resistance Correction Factors (using Pascals)

TrueFlow System Operating Pressure in Pascals (TFSOP)	Normal System Operating Pressure in Pascals (NSOP)																				
	10	12	14	16	18	20	22	24	26	28	30	32	34	36	38	40	42	44	46	48	50
10	1.00	1.10	1.18	1.26	1.34	1.41	1.48	1.55	1.61	1.67	1.73	1.79	1.84	1.90	1.95	2.00	2.05	2.10	2.14	2.19	2.24
12	0.91	1.00	1.08	1.15	1.22	1.29	1.35	1.41	1.47	1.53	1.58	1.63	1.68	1.73	1.78	1.83	1.87	1.91	1.96	2.00	2.04
14	0.85	0.93	1.00	1.07	1.13	1.20	1.25	1.31	1.36	1.41	1.46	1.51	1.56	1.60	1.65	1.69	1.73	1.77	1.81	1.85	1.89
16	0.79	0.87	0.94	1.00	1.06	1.12	1.17	1.22	1.27	1.32	1.37	1.41	1.46	1.50	1.54	1.58	1.62	1.66	1.70	1.73	1.77
18	0.75	0.82	0.88	0.94	1.00	1.05	1.11	1.15	1.20	1.25	1.29	1.33	1.37	1.41	1.45	1.49	1.53	1.56	1.60	1.63	1.67
20	0.71	0.77	0.84	0.89	0.95	1.00	1.05	1.10	1.14	1.18	1.22	1.26	1.30	1.34	1.38	1.41	1.45	1.48	1.52	1.55	1.58
22	0.67	0.74	0.80	0.85	0.90	0.95	1.00	1.04	1.09	1.13	1.17	1.21	1.24	1.28	1.31	1.35	1.38	1.41	1.45	1.48	1.51
24	0.65	0.71	0.76	0.82	0.87	0.91	0.96	1.00	1.04	1.08	1.12	1.15	1.19	1.22	1.26	1.29	1.32	1.35	1.38	1.41	1.44
26	0.62	0.68	0.73	0.78	0.83	0.88	0.92	0.96	1.00	1.04	1.07	1.11	1.14	1.18	1.21	1.24	1.27	1.30	1.33	1.36	1.39
28	0.60	0.65	0.71	0.76	0.80	0.85	0.89	0.93	0.96	1.00	1.04	1.07	1.10	1.13	1.16	1.20	1.22	1.25	1.28	1.31	1.34
30	0.58	0.63	0.68	0.73	0.77	0.82	0.86	0.89	0.93	0.97	1.00	1.03	1.06	1.10	1.13	1.15	1.18	1.21	1.24	1.26	1.29
32	0.56	0.61	0.66	0.71	0.75	0.79	0.83	0.87	0.90	0.94	0.97	1.00	1.03	1.06	1.09	1.12	1.15	1.17	1.20	1.22	1.25
34	0.54	0.59	0.64	0.69	0.73	0.77	0.80	0.84	0.87	0.91	0.94	0.97	1.00	1.03	1.06	1.08	1.11	1.14	1.16	1.19	1.21
36	0.53	0.58	0.62	0.67	0.71	0.75	0.78	0.82	0.85	0.88	0.91	0.94	0.97	1.00	1.03	1.05	1.08	1.11	1.13	1.15	1.18
38	0.51	0.56	0.61	0.65	0.69	0.73	0.76	0.79	0.83	0.86	0.89	0.92	0.95	0.97	1.00	1.03	1.05	1.08	1.10	1.12	1.15
40	0.50	0.55	0.59	0.63	0.67	0.71	0.74	0.77	0.81	0.84	0.87	0.89	0.92	0.95	0.97	1.00	1.02	1.05	1.07	1.10	1.12
42	0.49	0.53	0.58	0.62	0.65	0.69	0.72	0.76	0.79	[illegible]	[illegible]	[illegible]	0.90	0.93	0.95	0.98	1.00	1.02	1.05	1.07	1.09
44	0.48	[illegible]	0.56	0.60	0.64	0.67	0.71	0.74	[illegible]	[illegible]	[illegible]	[illegible]	0.88	0.90	0.93	0.95	0.98	1.00	1.02	1.04	1.07
46	[illegible]	[illegible]	[illegible]	0.59	0.63	0.66	0.69	[illegible]	[illegible]	[illegible]	[illegible]	[illegible]	[illegible]	0.88	0.91	0.93	0.96	[illegible]	[illegible]	1.02	[illegible]
[illegible]	[illegible]	[illegible]	[illegible]	[illegible]	0.61	0.65	[illegible]	[illegible]	[illegible]	[illegible]	[illegible]	[illegible]	[illegible]	0.87	0.89	0.91	[illegible]	[illegible]	[illegible]	1.00	[illegible]
[illegible]	[illegible]	[illegible]	[illegible]	[illegible]	[illegible]	[illegible]	[illegible]	[illegible]	[illegible]	[illegible]	[illegible]	[illegible]	[illegible]	[illegible]	0.87	[illegible]	[illegible]	[illegible]	[illegible]	[illegible]	[illegible]

EXAMPLE OF FLOW RESISTANCE CORRECTION FACTORS USED TO CALCULATE ADJUSTED AIRFLOW

2. PLENUM PRESSURE MATCHING MEASUREMENT

- **Overview**
  - This procedure is also known as "Duct Tester Used as a Powered Capture Hood."
  - The duct tester is used to pressurize the system to equal the pressure created by the air handler, so that airflow through the duct tester represents system airflow (fan flow).
- **Protocol**
  - Equipment used for measurements shall meet the requirements specified in ACM Residential Manual Appendix RE-2005, §RE.3.1.1, "Plenum Pressure Matching Measurement."
  - The following general guidelines are for reference only; measurement shall be:
    - Performed in accordance with test equipment manufacturer's instructions, and
    - In harmony with ACM Residential Manual Appendix RE-2005, §RE.4.1.2, "Diagnostic Fan Flow Using Plenum Pressure Matching".

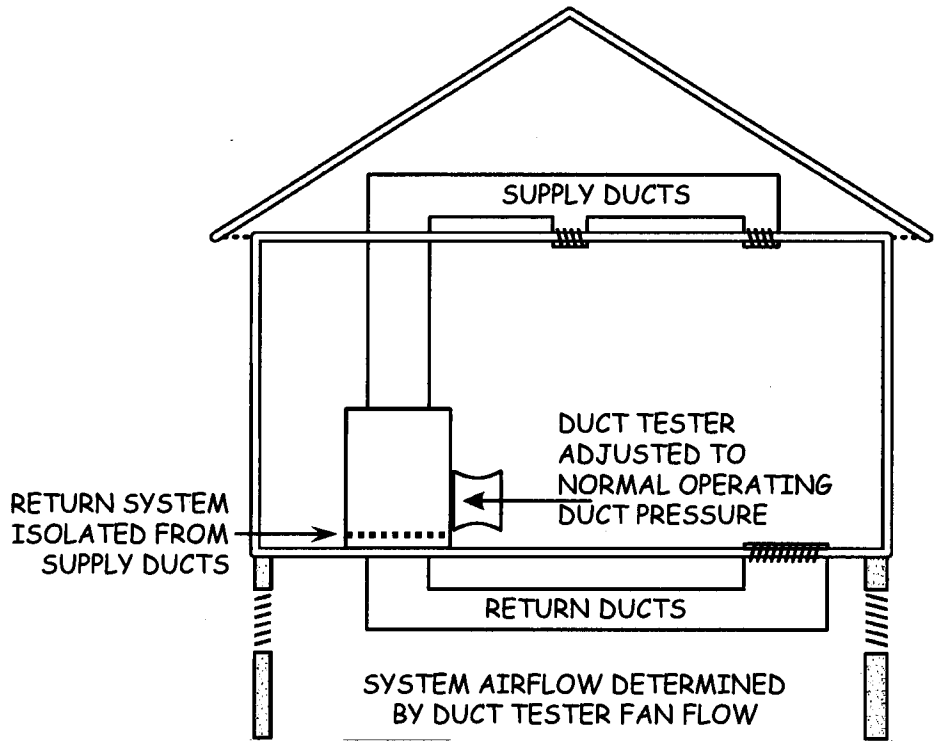

2. PLENUM PRESSURE MATCHING MEASUREMENT (continued)

- **General Guidelines**
  - **Step 1:** Supply plenum pressure test set-up:
    - Air handler shall be off.
    - Doors, windows, etc. shall be open to prevent pressure changes in the space containing the handler (e.g., outside door/window for air handler in conditioned space; or access doors, vents, etc. for air handler in garage, attic, etc.).
    - All supply and return registers shall be open, and filter(s) clean.
    - Static pressure probe, directed into the airflow, shall be inserted into the supply plenum or in a supply trunk nearby. It shall be adjusted (rotated) to achieve the highest pressure and securely attached.
    - Tubing from the probe shall be attached to **Channel A Input** tap of the digital pressure gauge, and the **Reference** tap shall be open to the conditioned space.
  - **Step 2:** With the air handler fan operating at the maximum speed used in the system (e.g., cooling speed when air conditioning is present), the pressure difference in Pa between the supply plenum and the conditioned space (**P**sp) shall be measured. **P**sp, the normal operating duct pressure, is the target pressure to be maintained during the system airflow (fan flow) tests.

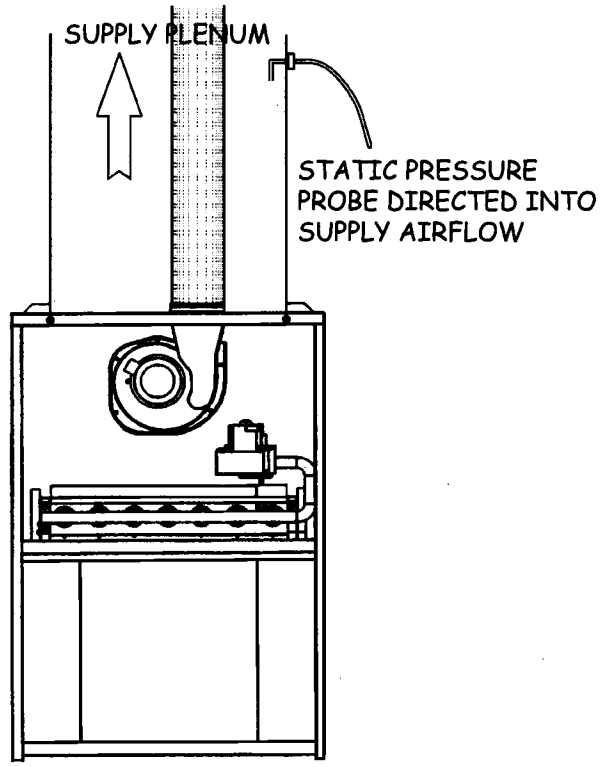

2. PLENUM PRESSURE MATCHING MEASUREMENT (continued)

- **General Guidelines**
  - **Step 3:** Duct Tester set-up at air handler cabinet:*
    - With the air handler access panel removed, the return air opening inside the air handler cabinet shall be sealed (e.g., with cardboard and tape) to isolate the return system from the supply system.
    - The Duct Tester shall be installed in place of the air handler access panel. If air handler components will obstruct airflow, the Duct Tester shall be mounted on an extension/box (illustrated below) that holds it away from the furnace cabinet.
    - Tubing shall connect the Duct Tester to the **Channel B Input** tap on the digital pressure gauge, and the **Reference** tap shall be open to space where the Duct Tester is located.

*Attachment to the return grille of a single-return system (pictured on page D-15) is possible. However, if the return duct is not substantially airtight, leaks will cause the airflow measurement to be inaccurate.

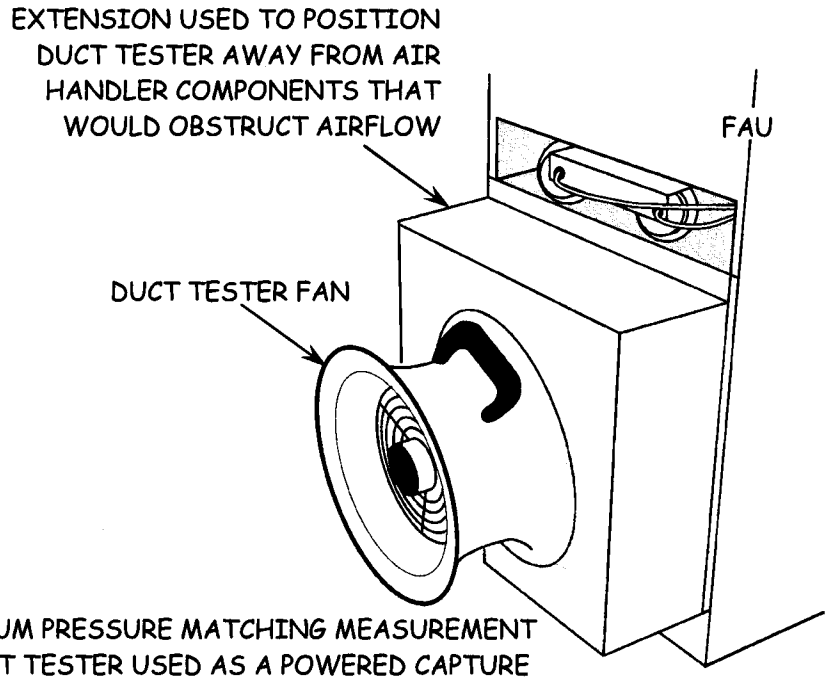

PLENUM PRESSURE MATCHING MEASUREMENT (DUCT TESTER USED AS A POWERED CAPTURE HOOD)—WITH FAN ASSEMBLY EXTENDED AWAY FROM AIR HANDLER OBSTRUCTIONS

2. PLENUM PRESSURE MATCHING MEASUREMENT (continued)

- **General Guidelines (continued)**
  - **Step 4:** With the air handler operating,
    - Duct Tester shall be turned on and adjusted until the duct pressure on **Channel A** equals the normal operating duct pressure (**P**sp) measured in Step 2.
    - Airflow through the Duct Tester shall be determined (calculated or measured using the digital gauge fan flow feature), which is the estimated cfm system airflow through the air handler (**Q**ah).
  - **Step 5:** Correction shall be made when Duct Tester cannot adequately pressurize the system to equal the normal operating duct pressure (Psp) recorded in Step 2:
    - With the Duct Tester producing the maximum attainable duct pressure on **Channel A** (**P**max), the airflow through the Duct Tester (**Q**max) shall be determined.
    - System airflow at normal operating duct pressure (**P**sp) shall be estimated using the following equation:
    - System (Air Handler) Airflow = **Q**ah = **Q**max x (**P**sp/**P**max)$^{0.5}$

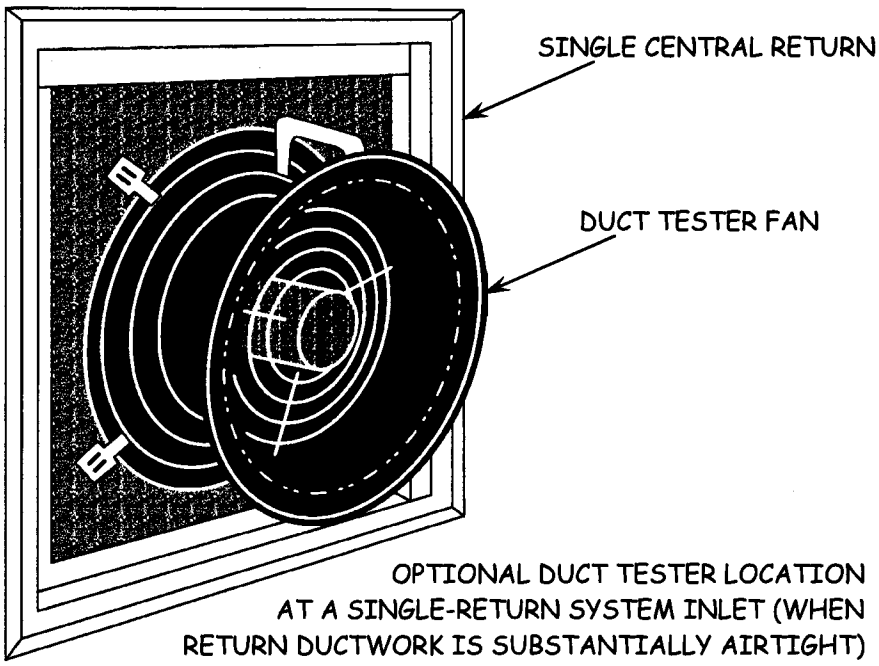

3. USING A FLOW CAPTURE HOOD

- **Overview**
  - The procedure utilizes a "capture flow hood" to directly measure airflow through the return or supply system.
  - The flow hood covers the entire register/grille and captures the airflow going into it.
- **Protocol**
  - Equipment used for measurements shall meet the requirements specified in ACM Residential Manual Appendix RE-2005, §RE.3.1.2, "Flow Capture Hood Measurement."
  - The following general guidelines are for reference only; measurement shall be:
    - Performed in accordance with test equipment manufacturer's instructions, and
    - In harmony with ACM Residential Manual Appendix RE-2005, §RE.4.1.1, "Diagnostic Fan Flow Using Flow Capture Hood."
- **General Guidelines**
  - **Step 1:** Fan switch shall be set to "On" position with system air handler operating on maximum speed for the unit. To get highest speed in systems without a fan "On" switch, unit must be run in:
    - Cooling mode for heating and air conditioning systems.
    - Heating mode for heating-only systems.
  - **Step 2:** System airflow (fan flow) shall be measured at the return grille(s) with a calibrated Flow Capture Hood. When multiple return grilles are present, airflow at each shall be measured.
  - **Step 3:** The Total System Airflow in cfm (**Q**ah) shall be the sum of the measured return flows.

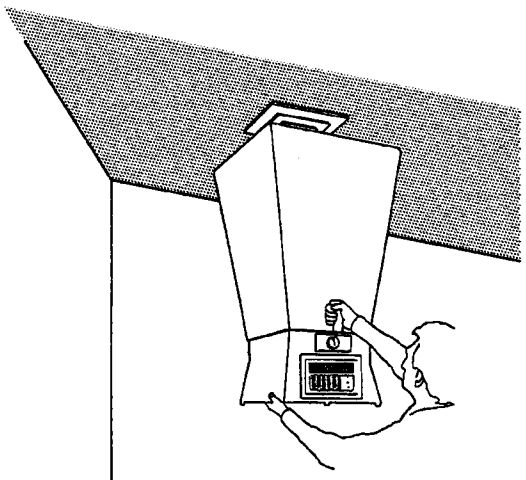

MEASURING AIRFLOW WITH A FLOW CAPTURE HOOD

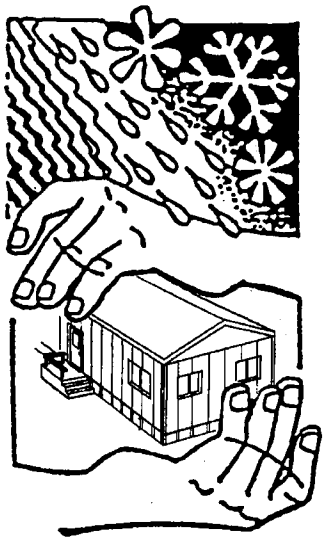

CALIFORNIA MOBILE HOME WEATHERIZATION INSTALLATION STANDARDS

for use in

California's Low Income Energy Efficiency Programs

administered by

San Diego Gas and Electric Company
Southern California Edison
Southern California Gas Company
Pacific Gas and Electric Company

Part 2a (Mobile-*edits accepted*)

OCTOBER 20, 2005 –*REVISIONS*

ABBREVIATIONS AND ACRONYMS

AAMA	American Architectural Manufacturers Association
ACCA	Air Conditioning Contractors of America
ACDD	Annual Cooling Degree Days
AFUE	Annual Fuel Utilization Efficiency
AGA	American Gas Association
AHDD	Annual Heating Degree Days
ANSI	American National Standards Institute
ARI	Air Conditioning and Refrigeration Institute
ASHRAE	American Society of Heating, Refrigerating and Air-Conditioning Engineers
ASME	American Society of Mechanical Engineers
ASTM	American Society for Testing and Materials
AWG, awg	American Wire Gage
BEAR	Bureau of Electronic and Appliance Repair
BEF	Ballast Efficacy Factor
BOCA	Building Officials and Code Administrators
Btu	British Thermal Unit
Btu/hr	British Thermal Units per Hour
°C	Degrees Centigrade
CABO	Council of American Building Officials
Cal OSHA	California Occupational Safety and Health Administration
CAS	Combustion Appliance Safety
CASIF	Combustion Appliance Safety Inspection Form
CAZ	Combustion Appliance Zone

ABBREVIATIONS AND ACRONYMS

CBM	Certified Ballast Manufacturers
CBC	California Building Code
CBO	Community Based Organization
CCR	California Code of Regulations
CDD	Cooling Degree Days (also see ACDD)
CEC	California Energy Commission and California Electrical Code
CFL	Compact Fluorescent Lamp
CFM, cfm	Cubic Feet per Minute
CFM_{25}	Cubic Feet per Minute of Air Flow at 25 Pascals of Pressure
CFM_{50}	Cubic Feet per Minute of Air Flow at 50 Pascals of Pressure
CFR	Code of Federal Regulations
CMC	California Mechanical Code
CO	Carbon Monoxide
COP	Coefficient of Performance
CPSC	Consumer Products Safety Commission
CSD	(California Department of) Community Services and Development
DOE	(United States) Department of Energy
DV	Direct Vent (Furnace/Heater)
EER	Energy Efficiency Ratio
EPA	Environmental Protection Agency
ESP	Economic Stop Parameters/Economic Stop Policy
°F	Degrees Fahrenheit
F.S.	Federal Specifications

ABBREVIATIONS AND ACRONYMS

FAU	Forced Air Unit
fpm	Feet per Minute
GFCI	Ground Fault Circuit Interrupter
HCD	(California Department of) Housing and Community Development
HDD	Heating Degree Days (also see AHDD)
HDL	House Depressurization Limit
HPD	Heat Producing Device
HUD	(U.S. Department of) Housing and Urban Development
HVAC	Heating Ventilation and Air Conditioning
Hz	Hertz
ICBO	International Conference of Building Officials
ID	Inside Diameter
IWC, iwc	Inches of Water Column (Same as IWG, Inches of Water Gauge)
IWG, iwg	Inches of Water Gauge (Same as IWC, Inches of Water Column)
KHz	Kilohertz
MHCSS	HUD Manufactured Home Construction and Safety Standards
MVR	Minimum Ventilation Requirement
NEC	National Electrical Code
NEMA	National Electrical Manufacturers Association
NFPA	National Fire Protection Association
NFRC	National Fenestration Rating Council
NFVA, NFV Area	Net Free Venting Area: Total vent opening area minus the blocking effect of louvers, grilles, and screens
OC	On Center

ABBREVIATIONS AND ACRONYMS

OD	Outside Diameter
OSHA	Occupational Safety and Health Administration
P&P	Policy and Procedures
Pa	Pascal (1 Pa = 0.004 iwc, and 1 iwc = 250 Pa)
PPM, ppm	Parts Per Million
psf	Pounds per Square Foot
psi	Pounds per Square Inch
RTV	Room Temperature Vulcanization (e.g., RTV Silicone)
SEER	Seasonal Energy Efficiency Ratio
T&P Valve	Temperature and Pressure Relief Valve
TPE	Thermoplastic Elastomer
UBC	Uniform Building Code
UL	Underwriters Laboratories
UMC	Uniform Mechanical Code
UPC	Uniform Plumbing Code
UV	Ultraviolet
WC, wc	Water Column (Same as Water Gauge)
WG, wg	Water Gauge (Same as Water Column)
WIS	Weatherization Installation Standards
Wx	Weatherization

DEFINITIONS

Abandoned Appliance	An appliance which is no longer used and has been removed from service and: (1) the flexible gas connector has been removed, and (2) the gas line shut-off valve has been capped, or the valve has been removed and the pipe capped.
Backdrafting	The reverse flow of combustion gases down the vent pipe and out the draft hood of a natural vent open combustion appliance. Intermittent backdrafting can be caused by wind gusts. Ongoing backdrafting can be the result of a negative pressure in the combustion appliance zone (CAZ) caused by (a) duct system return leaks in the vicinity of the appliance, and/or (b) the excessive influence of mechanical systems exhausting air from the structure (e.g., bathroom and utility room exhaust fans, range hood fan, clothes dryer, built-in vacuum system, etc.).
Closure System	The sum total of components utilized to secure and seal a duct system joint or seam against air leakage (e.g., pressure sensitive tape, or heat activated tape, or mastic with fiberglass mesh reinforcement). Closure systems for non-metallic flexible ducts include a drawband.
Combustion Air	The total amount of air provided to the space, which contains fuel-burning equipment; it includes air for fuel combustion, for draft hood dilution and for ventilation of the equipment enclosure. (Reference 2001 UMC, section 205.)
Combustion Appliance Zone (CAZ)	The room or area of a home in which an open combustion natural draft appliance (typically a furnace, water heater, wood burning stove or fireplace) is located. It could be a living room containing a wood burning stove, a kitchen or utility porch containing a water heater, or an appliance enclosure. Excessive depressurization of the CAZ causes backdrafting and spillage of combustion gases.
Conditioned Space	An area, room or space normally occupied and being heated or cooled by any equipment for human habitation. (Reference 2001 UMC, section 205.)
Confined Space	A room or space having a volume less than 50 cubic feet per 1,000 Btu/h of aggregated input rating of all fuel

burning appliances installed in the space. (Reference 2001 UMC, section 205.)

Drawband — A device which encircles a duct and mechanically secures the core-to-fitting attachment (i.e., a synthetic duct tie or a worm drive stainless steel clamp). Duct ties are also used to secure fiberglass duct wrap and to seal jacket overlaps at flexible duct splices.

Duct Systems — All ducts, duct fittings, plenums and fans assembled to form a continuous passageway for the distribution of air. (Reference 2001 UMC, section 206.)

Enclosed Cavity — A building cavity that is totally enclosed and inaccessible for installation of measures. An example is a low-profile section of attic that is closed off by drywall, plywood or other sheathing. Because of inadequate crawl clearance, proper installation of insulation would not be feasible even if an access hole were cut.

FAU — Forced air unit, which is that portion of a central heating and/or air conditioning (A/C) system which contains the air handler (blower section). In a "Split System," it is the furnace. In a "Package System," the entire heating and A/C "Package Unit" may be referred to as the FAU.

Heat Activated Tape — Metallic tape with an adhesive coating which is activated and cured by the application of heat and pressure.

Inaccessible Appliance — A combustion appliance that cannot be accessed for NGAT testing, due to a locked passage or a physical impediment. Examples include a water heater in a locked room/enclosure for which a key is not available, an attic-mount furnace that requires entry through an inaccessible MUD unit, and a floor furnace in a crawl space with inadequate crawl clearance. A floor furnace may also be inaccessible because it has been covered over by plywood or attached floor covering (e.g., wall-to-wall carpet or vinyl). A floor or wall furnace may be inaccessible because it has been turned off and blocked by heavy furniture (e.g., a hutch or cabinet).

Labeled — Equipment or materials to which has been attached a label of a nationally recognized testing agency that

maintains periodic inspection of the production of labeled equipment or materials. Labeling indicates compliance with nationally recognized standards. (Also see "Listed" and "UL Classified, Labeled, Listed".)

Lapped Seam — The seam (joint) formed where two pieces of material (usually sheet metal) are overlapped.

Longitudinal Joint — Lengthwise joint along a piece of duct (e.g., the joint running the full length of a snap-together sheet metal duct). [Note: *longitudinal* means "lengthwise"...in contrast with *transverse,* which means "across".]

Mobile Home — Mobile homes are manufactured homes regulated by the Department of Housing and Urban Development (HUD) through a national code, called the Manufactured Housing Construction and Safety Standards—the "HUD Code" for short. A manufactured home is built on a trailer (chassis) and designed to be delivered over the road to a permanent location, either as a single- or multiple-section unit. A mobile home is a permanent, full-time residential dwelling with a floor area of at least 330 square feet.

NFPA 90B — Standards governing installation of "Warm Air Heating and Air Conditioning Systems" in one- or two-family dwellings and structures not exceeding 25,000 cu. ft. Provides specifications for the manufacture and installation of rigid metal ductwork and references UL 181 regarding factory made air ducts (e.g., flexible ducts). Installations in larger structures are addressed by NFPA 90A.

NFV, NFVA — NFV stands for "net free venting." NFVA is "net free venting area," the net amount of venting area provided by a vent after the blocking effect of mesh and/or louvers has been subtracted from the gross area of the vent opening(s).

Package Unit — A combination heating and air conditioning system contained within one housing unit, which is installed outdoors (on the roof or on a slab next to the house). (Also see "Split System.")

DEFINITIONS

Pascal (Pa)	A small unit of pressure equivalent to 0.004 inches of water column (IWC). 1 Pa = 0.004 IWC, and 1 IWC = 250 Pa. 25 Pa, the pressure typically used to test duct systems for leakage, is equivalent to 0.1 IWC. Conversion formulas are: [Pa = IWC ÷ 0.004] and [IWC = Pa x 0.004].
Perm	A unit of permeance, which refers to how permeable a material is (e.g., how well moisture will pass though a vapor barrier).
Plenum	An air compartment or chamber to which one or more ducts are connected and which form part of either the supply-air, return-air or exhaust-air system, other than the occupied space being conditioned. (Reference 1997 UMC, section 215-P, page 13.)
Pressure Sensitive Tape	Duct tape with a tacky adhesive coating (e.g., butyl, acrylic, etc.) which will adhere to a surface with the application of pressure (heat not required). Duct tapes used in the CSD-sponsored programs must be listed and marked per UL 181A and 181B standards.
Repair	Corrective work performed by a qualified technician, intended to make a natural gas appliance operate properly, when correction is beyond the scope of "Service/Adjustment".
Replacement	Complete replacement of a defective natural gas appliance, when repair is <u>not</u> feasible: i.e., the cost to repair the appliance exceeds program guidelines, or parts required to make the appliance safely operable cannot be obtained.
Service/Adjustment	Minor corrective work, within the normal scope of service for customers in general, performed by utility gas service personnel, or designated representative, intended to make a natural gas appliance operate properly without repair or replacement.
Spillage	In a natural vent open combustion appliance, the outflow of combustion gases from the draft hood and into the atmosphere of the room or area where the appliance is located (the combustion appliance zone, or CAZ).

Spillage occurs when drafting through the vent system is inadequate to carry combustion gasses up through the vent pipe and out into the atmosphere. Spillage occurs briefly when combustion first begins in a cold appliance, because cold air in the vent pipe impedes exhaust flow until the systems warms up. Continuous spillage may result when the vent pipe is blocked by an obstruction or is improperly constructed (too many elbows, improper slope, inadequate diameter, etc.).

Split System — A heating and cooling system in which the air conditioning evaporator coil is attached to the furnace, which is located indoors (typically in the garage, attic, or interior closet), and the condenser unit (with coil, compressor, and fan) is installed outdoors, usually on a slab next to the house. (Also see "Package Unit.")

Transverse Joint — The joint formed when two pieces of duct are spliced together (e.g., the joint around the circumference where two round ducts are joined together, and the joint around the perimeter where two rectangular ducts are joined together). [Note: *transverse* means "across"...in contrast with *longitudinal*, which means "lengthwise".]

UL 181 — UL "Standard for Factory-Made Air Ducts and Connectors".

UL 181A — UL standard for pressure sensitive aluminum tapes, heat activated aluminum tapes, and mastic closure systems for use with rigid fiberglass air ducts.

UL 181B — UL standard for pressure sensitive tapes and mastic closure systems for use with flexible air ducts.

UL Class 0 Duct — Air duct materials having a fire hazard classification of zero (flame spread and smoke developed).

UL Class 1 Duct — Air duct materials having a flame-spread rating of not over 25 without evidence of continued progressive combustion and a smoke-developed rating of not over 50.

UL Classified, Labeled, Listed, Recognized

- **UL Classified** means that UL testing was limited to examination of one potential hazard.
- **UL Labeled** means that a product is either UL Listed or UL Classified. Note that a product can be certified and "listed" without involving UL. Other accredited laboratories (e.g., CSA International, ITS Intertek Services, ETL SEMKO, etc.) can test products and certify conformance with established standards. Such products can thus be "listed and labeled" without reference to UL. (See "Listed" and "Labeled" above.)
- **UL Listed** means that UL testing included examination of *all* foreseeable hazards.
- **UL Recognized** means that a component (such as a motor) is approved for use in a UL Listed product (such as an evaporative cooler). The complete cooler is UL Listed, but the tested and approved components used in it are "UL Recognized components." Each UL Recognized component is tested to a UL standard applicable to that component, and it is "recognized" for use in a UL Listed product.

SECTION 1 PREFACE
FOR

NATURAL GAS APPLIANCE TESTING (NGAT)

1. INSTALLATION POLICIES

1.1. Natural gas appliance testing will be conducted only for homes that receive infiltration reduction measures and that have at least one natural gas appliance affecting the living space. (Appliances affecting the living space are those identified as such in this section of this WIS manual.) In addition, the repair and replacement of a natural gas furnace or water heater involves appliance testing.

1.2. Homes with non-IOU (e.g., propane) space heating fuel:

1.2.1. Homes with non-IOU (e.g., propane) space heating fuel are not eligible for combustion natural gas appliance testing nor infiltration reduction measures. Homes with IOU space heating but which use a non-IOU combustion fuel for another appliance (say, water heating) are also ineligible for NGAT due to the inability of the IOUs to service combustion appliances using non-IOU fuels. The IOU will refer these homes to local LIHEAP agencies to conduct testing and do any repairs or replacement of non-IOU combustion fuel appliances and charge such services to the LIHEAP agencies' CSD-funded weatherization programs. Whether the LIHEAP agencies would also install infiltration reduction measures, or any other weatherization measures under their LIHEAP programs, would be sub-ject to voluntary agreements freely entered into by the IOUs and the local LIHEAP agencies.

1.2.2. Any agreement between an IOU and a local LIHEAP agency which does not contract with that IOU to provide weatherization services un-der the IOU's LIEE program will be voluntarily negotiated on a case-by-case basis, given different geographic areas served, and different situations which might occur in different parts of each IOU's service area.

1.2.3. In any part of a given IOU service area where the local LIHEAP agency chooses NOT to enter into such an agreement, the IOU will continue to install all feasible non-infiltration weatherization measures under its LIEE program, then refer customers to the local LIHEAP agency if they want to have their non-IOU fuel combustion appliances tested, repaired or replaced, and/or want to have infiltration reduction measures installed by the LIHEAP agency.

1.3. In order to avoid cases in which post-weatherization NGAT protocol would discover nonconforming conditions that: (a) preclude installation of infiltration reduction measures, and (b) cannot be corrected within the scope of the program,

some pre-weatherization evaluations of gas appliances are performed as part of the initial home assessment.

Pre-weatherization appliance evaluations include the following components:

- Gas Leaks. Each gas-burning appliance is checked for the presence of gas leaks. When a natural-gas leak is found, the utility is contacted for gas service repairs. Non-IOU gas leaks are treated in accordance with utility-specific policies. All gas leaks must be repaired before weatherization commences.
- Combustion and Ventilation Air (CVA) Evaluations. CVA is evaluated for furnaces and water heaters to determine if it is adequate and, if inadequate, whether correction is feasible/possible.
- Flue and Vent Pipe Termination Evaluations. Flue and vent pipe terminations are checked to determine if any violate NGAT criteria and, if nonconforming, whether correction is feasible.
- Appliance Operation and Accessibility. All gas-burning appliances are checked to determine whether: (a) they are accessible for testing, and (b) they are operable. Non-operable natural gas appliances are referred to the appropriate utility service department. Non-operable propane appliances are treated in accordance with utility-specific policies.
- Unvented Space Heater. The dwelling is checked for presence of an unvented combustion appliance used for heating the living space (which will preclude installation of infiltration reduction measures if not removed/elimiated).
- Gas Clothes Dryer. If located within the living space, the clothes dryer moisture exhaust is checked to determine if it is properly vented outdoors. If not properly vented outdoors, infiltration reduction measures will not be installed. This restriction does not apply to a gas clothes dryer located in an attached garage.
- Gas Cooking Area Ventilation. Check to determine if gas cooking is present and the kitchen exhaust to outdoors is nonconforming. This condition may be conducted as a minor home repair.
- Open Combustion Space/Water Heater Indoors. Check to determine if an open combustion space or water heater is present within the living space.
- Isolation of Return Air. Check to determine if an exterior-accessed appliance enclosure has unacceptable isolation of furnace return air.

Required corrections will be performed before weatherization commences. The owner will be informed of conditions that preclude installation of infiltration reduction measures and cannot be remedied by the LIEE program (e.g., exhausting clothes dryers outdoors, and repair or replacement of appliances and gas vents for which repair or replacement is not available).

1.4. After completion of weatherization that includes infiltration reduction measures, NGAT is performed for all natural gas appliances affecting the living space. Testing of appliances using non-IOU fuels is conducted in accordance with utility-specific policies (see 1.2 and 1.5). Post-weatherization NGAT includes the following components:

- Visual Examinations, including flue and vent system checks, appliance component checks, re-check for gas leaks, inoperable or inaccessible appliances, nonconforming appliances; and check for properly-blocked fireplace damper if gas log is used as the primary heat source.
- Combustion and Ventilation Air (CVA) Verification.
- Ambient Carbon Monoxide Tests, as prescribed in item 1.5.
- Draft Tests, using smoke, on appliances for which draft tests are applicable (e.g., open combustion natural draft space- and water-heating appliances).

1.5. For IOU-fueled gas appliances (appliances using natural gas provided by SDG&E, PG&E, or So Cal Gas), ambient CO Testing will be conducted using the following protocol:

- Space Heating Appliances: Appliance ambient CO testi is performed for all space heating appliances.
- Water Heaters: Appliance ambient CO testi is performed if the water heater is in a location affecting the living space.
- Cooking Appliances: Room ambient CO tests are performed in the kitchen separately during operation of each cooking appliance component (cook top, oven, and broiler).
- Gas Logs: Exhaust gas CO test is performed inside the top edge of the fireplace opening.
- Clothes Dryers: No CO tests are performed.

1.6. If a problem is identified through application of the overall NGAT protocol, (i.e., elevated CO, inadequate draft, or defect causing an unsafe condition), the case will be referred for resolution to qualified utility-trained personnel or a contractor licensed to repair appliances. Such resolution may involve the use of flue CO testing as well as other procedures.

1.7. Timing of combustion appliance testing will be as follows:

1.7.1. Homes with Natural Gas Appliances

For homes other than those using non-IOU combustion fuels with natural gas appliances, combustion appliance testing post-weatherization NGAT protocol is are conducted <u>after</u> weatherization. Post-weatherization NGAT shall be conducted within five (5) working days from the date that infiltration reduction measures are installed.

1.7.2. Homes for which Infiltration Reduction is Simulated

Temporary sealing/blocking of defective windows and doors, in order to perform post-weatherization NGAT, is allowed when required materials (such as specialty glass or special-order windows or doors) are not available to be installed concurrently with the other weatherization measures. NGAT will be conducted with the defect sealed/blocked (e.g., with plastic sheeting) to simulate infiltration reduction achieved by the completed window/door repair/replacement. A repeat of NGAT following the completed repair/replacement is not required.

1.8. The following actions will be taken when appliances fail NGAT:

- In owner-occupied homes, natural gas space heaters and water heaters failing one or more of the tests covered by the NGAT protocol will be provided with Service/Adjustment and, if necessary, will be repaired or replaced in accordance with Program P&P. The absence of a furnace in cases where another gas appliance is used for space heating will constitute an NGAT fail.
- In owner-occupied homes, natural gas water heaters failing one or more of the tests covered by the NGAT protocol will be provided with Service/Adjustment and, if necessary, will be repaired or replaced subject to Program P&P.
- In owner-occupied homes, non-program appliances failing one or more of the tests covered under the NGAT protocol will be provided with Service/Adjustment. If Service/Adjustment does not correct the problem, the appliances will be tagged ,shut off, , and/or capped and reported to the owner.
- In renter-occupied homes, appliances failing one or more of the tests covered by the NGAT protocol will be provided with Service/Adjustment. If Service/Adjustment does not correct the problem, the appliance will be tagged, shut off, and/or capped, and reported to the tenant and the landlord.

SECTION 2 PREFACE
FOR
CAULKING

1. INSTALLATION POLICIES

1.1. Caulking should be applied to the interior only.

SECTION 3 PREFACE
FOR
DOOR WEATHERSTRIPPING

1. INSTALLATION POLICIES

1.1. The contractor may adjust existing weatherstripping in lieu of replacement only if existing weatherstripping is functional and creates a proper seal.

1.2. Door shoe and threshold combinations must be installed unless proven to be nonfeasible.

1.3. A threshold should not be installed which exceeds 1" in height from the finished floor (1/2" in height for handicapped).

1.4. When the installation of a door shoe and threshold combination is not feasible for the following reasons, an automatic sweep may be used:

- Medical reasons, such as wheelchairs or walkers, require that the floor be as flat as possible.
- Metal doors cannot be cut to accommodate a shoe.
- Doors open outward and do not overlap a floor surface when closed. "Bumper" type thresholds may be used in this circumstance if a tripping hazard will not be created and they do not exceed height requirements.
- The installation of a proper threshold requires carpet cutting.
- The door is unusually expensive and might be aesthetically damaged by cutting or repair to wooden sill.

1.5. A stationary sweep can be used in lieu of an automatic sweep if a door shoe and threshold combination is not feasible and an automatic sweep cannot be installed.

1.6. The use of flip up sweeps is not allowed.

SECTION 4 PREFACE
FOR
GLASS AND WINDOW REPLACEMENT

1. INSTALLATION POLICIES

1.1. When only one pane in a dual pane window is cracked, the unit does not require repair/replacement.

1.2. If one pane is completely broken and has shards, then all shards must be removed.

1.3. Polycarbonate glazing is allowed only with written pre-approval from the LIEE Program Manager.

1.4. All window replacements require written pre-approval from the LIEE Program Manager.

SECTION 5 PREFACE
FOR
EXTERIOR DOOR REPLACEMENT

1. INSTALLATION POLICIES

1.1. There are no standard installation policies for this measure

SECTION 6 PREFACE

FOR

EVAPORATIVE COOLER AND AIR CONDITIONER VENT COVERS

1. INSTALLATION POLICIES

1.1. Shop-built wooden vent covers can only be used when a commercially manufactured cover is not available.

1.2. Each cover must be checked for proper fit. Removal and reinstallation must be demonstrated to the customer.

1.3. In the cooling season when the cooler or window/wall air conditioner is in use, Contractor can leave the cooler cover uninstalled after the initial installation and customer instruction.

SECTION 7 PREFACE
FOR
WATER HEATER INSULATION

1. INSTALLATION POLICIES

1.1. Only water heaters supplying hot water to residential units receiving other program measures are eligible to receive water heater insulation blankets.

SECTION 8 PREFACE
FOR
WATER HEATER PIPE INSULATION

1. INSTALLATION POLICIES

1.1. There are no standard installation policies for this measure.

SECTION 9 PREFACE
FOR
COVER PLATE GASKETS

1. INSTALLATION POLICIES

1.1. All broken, cracked, or missing cover plates shall be replaced.

1.2. All gaskets must be contractor-installed. No gaskets are to be left behind for customer installation.

SECTION 10 PREFACE
FOR

ENERGY-SAVER SHOWERHEADS AND FAUCET AERATORS

1. INSTALLATION POLICIES

1.1. All existing showerheads with a flow rate greater than 3 gpm and not required for medical reasons shall be replaced with low-flow showerheads.

1.2. Replaced showerheads may be left with the customer or the property manager only if requested.

SECTION 11 PREFACE
FOR
DUCT TESTING

1. INSTALLATION POLICIES FOR DUCT TESTING AND SEALING AS A FREE-STANDING MEASURE[1]

1.1. Duct testing and sealing as a measure will be offered only in Single Family and Mobile Homes.

1.2. Duct testing and sealing as a measure will be offered in all Climate Zones for Homes with Natural Gas Space Heating provided by the IOU.

1.3. For homes with electric space heat provided by the IOU, duct testing and sealing as a measure will be offered only in Climate Zones 10-16.

1.4. In order to be considered as a Program measure, the potential for duct leakage reduction must be at least 13% of total fan flow (airflow).

1.5. For a duct system to be considered sealed, (a) the duct leakage reduction must equal or exceed 13% of airflow; (b) the final duct leakage must be reduced to less than 15% of airflow, or, if this cannot be reached, (c) all accessible duct leaks must be sealed as verified by smoke tests.

1.6. Duct sealing is <u>not</u> required unless initial leakage is at least 28% of airflow.

1.7. The utility or its designee will verify initial and final duct leakage rates, in accordance with the procedures in Duct Testing Standards (Section 11), and Appendix B, Methods for Estimating and Measuring Airflow.

[1] Although Duct Testing and Sealing is a single measure, there are separate WIS sections for Duct Testing (Sec. 11) and Duct Sealing (Sec. 17). The Preface Pages are identical in both WIS Sections (11 and 17).

SECTION 12 PREFACE
FOR

THREAD-BASED COMPACT FLUORESCENT LAMPS (CFLs)

1. INSTALLATION POLICIES

1.1. A maximum of five CFLs may be installed in any home.

SECTION 13 PREFACE
FOR
HARD-WIRED COMPACT FLUORESCENT FIXTURES

1. INSTALLATION POLICIES

1.1. This measure is limited to single family non-mobile homes.

SECTION 14 PREFACE
FOR
EVAPORATIVE COOLER INSTALLATION

1. INSTALLATION POLICIES

1.1. Customer must have an operational refrigerated air conditioning unit.

1.2. For single family homes and mobile homes, evaporative coolers are available only in CEC Climate Zones 10–16.

SECTION 15 PREFACE
FOR
REFRIGERATOR REPLACEMENT

1. INSTALLATION POLICIES

1.1. The minimum size for primary refrigerators replaced under the LIEE Program is 10 cubic feet.

1.2. One of the refrigerators replaced under the Program must be a primary refrigerator. The primary refrigerator is the main refrigerator in the home, usually the kitchen refrigerator.

1.3. The size of the replacement refrigerator shall be approximately equal to the size of the existing unit. When two refrigerators and/or freezers are exchanged for a single unit, the replacement unit may not be larger than the combined size of the two existing units, and may not be larger than 23 cubic feet.

1.4. Space must be physically large enough to accommodate the new refrigerator, with entrance and passageways sufficient to allow removal of the existing refrigerator.

1.5. Contractor shall dispose and recycle (de-manufacture) replaced refrigerators in an environmentally safe manner and in accordance with federal, state, and local regulations and codes. Contractor represents that it has knowledge of the Metal Discard Act, effective January 1, 1994, which prohibits disposal of refrigerators/freezers in landfills.

SECTION 16 PREFACE
FOR

NATURAL GAS CENTRAL FORCED AIR HEATING SYSTEMS REPAIR AND REPLACEMENT

1. FURNACE REPAIR/REPLACEMENT POLICIES

1.1. Furnace repair or replacement may be provided only when the appliance ails NGAT, and correction cannot be achieved with Service/Adjustment[1] by utility gas service personnel (or their designated representative).

- The furnace is non-operable.
- No furnace is present and the household uses another gas appliance for space heating.

1.2. A central furnace may be replaced only if the cost of repairing the unit would be more than 50% of the cost of replacement.

1.3. Furnace replacements and major furnace repairs may be provided only if the residence is owner-occupied. Service/Adjustment may also be conducted in renter-occupied homes.

1.4. Furnace repairs and replacements will be provided only if the fuel used by the furnace is supplied by the utility providing LIEE Program services.

1.5. Furnace replacement will not include hazardous material abatement, major structural alteration, concrete work, painting, or floor covering.

1.6. An air conditioning unit may be replaced in conjunction with a furnace replacement if:

- The unit being replaced is a combined forced air heating and central AC package system, also referred to as a dual-pack (i.e., the AC and furnace is manufactured as one unit and is housed in a single sheet metal housing); or
- The furnace being replaced is part of a split forced air heating and AC system and the AC evaporative coil and/or the outside system cannot be matched with the new furnace. However, A/C replacement must not require refrigerant line replacement.

1.7. Replaced units must be de-manufactured in compliance with all laws and regulations.

---

[1] See Definitions.

1.8. Installer must have C-20 HVAC license.

1.9. A furnace that is not abandoned or inaccessible and that cannot be made operable through Servicing fails NGAT.

2. PROGRAMMABLE THERMOSTAT INSTALLATION POLICIES

2.1. A programmable thermostat may be installed only if (a) a furnace or central air conditioner is replaced, or (b) a central A/C is repaired and a properly functioning thermostat is not present.

2.2. Before installing a programmable thermostat, Contractor shall explain its operation and provide the customer an opportunity to refuse the measure.

2.3. Thermostats may be used to resolve short cycling problems.

3. CENTRAL SYSTEM HVAC FILTER INSTALLATION POLICIES

3.1. HVAC filters may be replaced only as part of central furnace repair or central air conditioner replacement.

3.2. Contractors must show customers how to remove, clean, and re-install the filters.

SECTION 17 PREFACE
FOR
DUCT SEALING

1. INSTALLATION POLICIES FOR DUCT TESTING AND SEALING AS A FREE-STANDING MEASURE[1]

1.1. Duct testing and sealing as a measure will be offered only in Single Family and Mobile Homes.

1.2. Duct testing and sealing as a measure will be offered in all Climate Zones for Homes with Natural Gas Space Heating provided by the IOU.

1.3. For homes with electric space heat provided by the IOU, duct testing and sealing as a measure will be offered only in Climate Zones 10-16.

1.4. In order to be considered as a Program measure, the potential for duct leakage reduction must be at least 13% of total fan flow (airflow).

1.5. For a duct system to be considered sealed, (a) the duct leakage reduction must equal or exceed 13% of airflow; (b) the final duct leakage must be reduced to less than 15% of airflow, or, if this cannot be reached, (c) all accessible duct leaks must be sealed as verified by smoke tests.

1.6. Duct sealing is <u>not</u> required unless initial leakage is at least 28% of airflow.

1.7. The utility or its designee will verify initial and final duct leakage rates, in accordance with the procedures in Duct Testing Standards (Section 11), and Appendix B, Methods for Estimating and Measuring Airflow.

[1] Although Duct Testing and Sealing is a single measure, there are separate WIS sections for Duct Testing (Sec. 11) and Duct Sealing (Sec. 17). The Preface Pages are identical in both WIS Sections (11 and 17).

SECTION 18 PREFACE
FOR
CENTRAL HIGH EFFICIENCY AIR CONDITIONER REPLACEMENT

1. CENTRAL AIR CONDITIONER REPLACEMENT POLICIES

1.1. Central air conditioner replacements will be offered only in Title 24 climate zones 14 and 15.

1.2. A programmable/setback thermostat may be installed only if a central air conditioner is replaced.

1.3. Prior to installation, contractors installing programmable thermostats shall explain their operation and provide the customer an opportunity to refuse the measure.

1.4. Thermostats may be moved to resolve short cycling problems.

1.5. HVAC filters may be replaced only as part of central furnace repair or central air conditioner replacement.

1.6. Contractors who replace filters must show customers how to remove, clean and reinstall the filters.

1.7. Replacement of refrigerant line sets is beyond the scope of this Program.

SECTION 19 PREFACE
FOR

HIGH EFFICIENCY WINDOW/WALL AIR CONDITIONERS

1. INSTALLATION POLICIES

1.1. Replacement unit must have a minimum EER of 10.7.

1.2. High efficiency window/wall air conditioners may be installed only in CEC Climate Zones 10-15.

1.3. Replaced units must be de-manufactured in compliance with all laws and regulations.

1.4. All units must be adequately supported and braced.

SECTION 21 PREFACE
FOR

NATURAL GAS WATER HEATER REPLACEMENT

1. WATER HEATER REPAIR/REPLACEMENT POLICIES

1.1. Water heater repair or replacement may be provided only: (a) when the appliance fails NGAT, and correction cannot be achieved with Service/Adjustment[1] by utility gas service personnel (or their designated representative, or (b) if the tank leaks).

1.2. A water heater may be repaired only if the cost of repairing the unit would be less than 50% of the cost of replacement.

1.3. Water heater repair or replacement and major repairs may be provided only if the residence is owner-occupied. Service/Adjustment may also be conducted in renter-occupied homes.

1.4. Water heater repairs and replacements will be provided only if the fuel used by the appliance is supplied by the utility providing LIEE program service.

1.5. Water heater replacement will not include hazardous material abatement, major structural alteration, concrete work, painting, or floor covering.

[1] See Definitions.

NONFEASIBILITY CRITERIA FOR NGAT FOR ENTIRE DWELLING

1. **Non-IOU combustion fuel is used for space heating.**
2. **No infiltration-reduction measures are installed.**
3. **No natural gas appliance affecting the living space is present.**

NONFEASIBILITY CRITERIA FOR NGAT FOR INDIVIDUAL APPLIANCE

1. **Non-IOU combustion fuel is used.**
   - **Exception: Appliances subject to PG&E-specific policy.**
2. **Appliance is abandoned.**[1]
3. **Appliance is inaccessible.**[1]

---

[1] **See Definitions**

NONFEASIBILITY CRITERIA FOR CAULKING

1. **The existing caulk is functioning properly, even if not installed in accordance with current Installation Standards.**
2. **Crack does <u>not</u> penetrate the building envelope.**
3. **Crack/gap too wide to be caulked (wider than 5/8") and must be repaired/patched.**
4. **Customer refuses.**

NONFEASIBILITY CRITERIA FOR WEATHERSTRIPPING DOORS

1. **The existing weatherstripping is functioning properly, even if not installed in accordance with current Installation Standards.**
2. **Door located between two conditioned or two unconditioned spaces.**
3. **Functional storm door is present.**
4. **Customer refuses.**

NONFEASIBILITY CRITERIA FOR GLASS REPLACEMENT

1. **Small hole, 1/4" or less, is present and can be patched with clear silicone or clear glass repair tape.**
2. **There is only one crack less than 6" long, extending from edge to edge, that cannot come loose from the frame to pose a safety hazard.**
3. **Complete window will be replaced.**
4. **Customer refuses.**

NONFEASIBILITY CRITERIA FOR WINDOW REPLACEMENT

1. **Window can be repaired rather than replaced.**
2. **Window is structurally sound and provides an adequate barrier to infiltration.**
3. **Window replacement will require removal of siding.**
4. **Customer refuses.**

NONFEASIBILITY CRITERIA FOR DOOR REPLACEMENT

1. **Door can be repaired rather than replaced.**
2. **Door is structurally sound and provides an adequate barrier to infiltration.**
3. **Door jamb is not structurally sound and cannot be repaired or replaced within the Minor Home Repair CAP.**
4. **Customer refuses.**

NONFEASIBILITY CRITERIA FOR EVAPORATIVE COOLER COVERS

1. **Existing evaporative cooler cover is functioning properly, even if not installed in accordance with current Installation Standards.**
2. **The evaporative cooler is ducted with multiple supply vents/registers, and it is impossible for all of them to be equipped with covers.**
3. **Water damage to the ceiling or wall area around the vent/register is evident, prevents proper cover installation, and cannot be repaired.**
4. **Vent/register opening is so close to adjacent wall that proper installation of the cover is impossible.**
5. **The vent(s) serving the evaporative cooler is (are) shared with a heating system.**
6. **Electrical wiring/plug/receptacle interferes with proper installation, and furring is not a feasible option.**
7. **External cover is already present.**
8. **Customer refuses.**

NONFEASIBILITY CRITERIA FOR WALL AND WINDOW AIR CONDITIONER VENT COVERS

1. **Existing air conditioner vent cover is functioning properly, even if not installed in accordance with current Installation Standards.**
2. **Water damage to the window or wall area around the unit/vent is evident, prevents proper cover installation, and cannot be repaired.**
3. **The vent/unit is so close to the wall that proper installation of the cover is impossible.**
4. **Customer refuses.**

NONFEASIBILITY CRITERIA FOR WATER HEATER INSULATION

All Water Heaters

1. The existing blanket is functioning properly, even if not installed in accordance with current Installation Standards.
2. External insulation is specifically prohibited by the manufacturer.
3. T&P relief valve is not present, or is not located within 6" of the tank.
4. T&P valve outlet is plugged or capped.
5. Tank is exposed to weather.
6. Leak present in tank or water pipes.
7. Plastic piping (e.g., PVC) is present in the cold or hot water line to/from the tank.
8. Tank is located within 12" of a stove, range, or cooktop.
9. Customer refuses.

Gas Water Heaters

1. Perimeter clearances prior to blanket installation are less than 4" between tank and door and less than 1" on sides and back.
2. *Gas leak present.
3. *Vent pipe and/or draft hood not properly installed, including:
   - No draft hood present.
   - Two draft hoods present.
   - Vent pipe defective or missing.
4. *Evidence of improper combustion and/or venting exists as characterized by:
   - Large accumulation of soot near draft hood or on floor underneath.
   - Scorching at draft hood or combustion chamber.
5. No appliance line valve (gas shut-off valve) present.

---

* When these conditions exist, contact the designated utility personnel.

6. *Combustion air supply improper or inadequate as characterized by:
   - The absence of both low and high vents (when required).
   - Vent size too small.
   - Room volume is inadequate.
   - Customer refuses modifications needed to create adequate combustion air supply.

7. *Both burner access doors missing.

8. Internal insulation is R-12 or greater.

Electric Water Heaters

1. Perimeter clearances prior to blanket installation are less than 1" on the front, sides and back.

2. Hazardous electrical wiring/conditions are present.

3. Thermostat cover plate(s) not present.

4. Internal insulation is R-16 or greater.

---

* When these conditions exist, contact the designated utility personnel.

NONFEASIBILITY CRITERIA FOR WATER HEATER PIPE INSULATION

1. The existing pipe insulation is functioning properly, even if not installed in accordance with current Installation Standards.
2. An unsafe condition is present that causes tank insulation to be nonfeasible.
3. Leak present in tank or water pipes.
4. T&P valve is not present, or is not located within 6" of the tank.
5. T&P valve outlet is plugged or capped.
6. Water heater pipes are exposed to the elements (especially sunlight, which can quickly degrade the insulation).
7. Less than 1 foot of continuous insulation can be installed.
8. Plastic piping (e.g. CPVC) is utilized for the cold or hot water tank lines to/from the tank.
9. Pipes are inaccessible or the configuration prevents proper installation.
10. Customer refuses.

NONFEASIBILITY CRITERIA FOR COVER PLATE GASKETS

1. **Evidence of electrical malfunction or hazard, such as:**
   - **Electrical box not permanently attached.**
   - **Loose electrical connection.**
   - **Signs of burning or charring or other evidence of hazardous wiring condition.**

2. **Gaskets are already present, even if not installed in accordance with current Installation Standards.**

3. **Cover plate is located on a wall between two conditioned or two unconditioned areas.**

4. **Cover plate located behind furniture or major appliances that are too fragile or too heavy to move.**

5. **Removal of cover plate will damage the wall surface (paint, wall paper, etc.).**

6. **Utility box is an odd size and standard gaskets will not work.**

7. **Aluminum wiring is present.**

8. **Customer refuses.**

NONFEASIBILITY CRITERIA FOR ENERGY-SAVER SHOWERHEADS

1. **Existing showerhead(s):**
   - **Have a flow rate less than or equal to 3.0 gpm.**
   - **Are functioning properly even if not installed in accordance with current Installation Standards.**
   - **Are required for medical reasons.**
2. **Existing showerarm:**
   - **Is made of plastic (including ball joint, i.e., for Price Pfister®).**
   - **Is cracked, broken, or missing.**
   - **Requires removal.**
3. **Shower is not mechanically functional.**
4. **Standard metal adapters (i.e., American Standard®, Gerber®, and Price Pfister®) will not work.**
5. **Piping is in such poor condition that showerhead installation could cause plumbing problems.**
6. **Customer refuses.**

NONFEASIBILITY CRITERIA FOR FAUCET AERATORS

1. **The aerator is functioning properly, even if not installed in accordance with current Installation Standards.**
2. **Faucet has special fitting for attaching appliance (e.g., portable dishwasher).**
3. **Faucet does <u>not</u> provide hot water.**
4. **The faucet or faucet threads are found to be damaged and/or leaky.**
5. **Removal of the existing aerator is likely to cause damage to the aerator or the faucet.**
6. **Standard aerators will <u>not</u> fit.**
7. **Customer refuses.**

NONFEASIBILITY CRITERIA FOR DUCT TESTING

1. **Ductwork contains excessive damage or deterioration that would preclude proper testing.**
2. **Ductwork is inaccessible or an unsafe condition exists, causing duct testing to be unfeasible.**
3. **A hazardous condition exists requiring repair or replacement per NGAT policy, and repair/replacement is not feasible.**
4. **Forced air heating unit is inoperative and cannot be repaired.**
5. **Asbestos is present in/on the duct system.**
6. **Forced air heating unit is abandoned or inaccessible.**
7. **The customer refuses.**

NONFEASIBILITY CRITERIA FOR THREAD-BASED COMPACT FLUORESCENT LAMPS

1. **Socket/fixture is nonfunctional.**
2. **Fixture already has a functional CFL.**
3. **Hazardous conditions exist at the socket/fixture.**
4. **Circuit is controlled by a solid-state timer.**
5. **Circuit is controlled by a dimmer not compatible with available CFL's.**
6. **Fixture is located in a storage room, closet, or multifamily common area.**
7. **Fixture is not operable by the customer (i.e., on their electric meter/bill).**
8. **Customer refuses.**

NONFEASIBILITY CRITERIA FOR HARD-WIRED COMPACT FLUORESCENT FIXTURES

1. **Existing location of the fixture is not suitable.**
2. **A thread-based CFL will fit in the existing fixture.**
3. **Electrical box is substandard and/or cannot be properly secured.**
4. **Wiring is substandard, in a deteriorated condition, and/or rewiring is necessary.**
5. **Circuit does not operate properly (e.g., defective switch).**
6. **Circuit is controlled by a solid-state timer.**
7. **Circuit is controlled by a dimmer not compatible with available hard-wired CFL fixtures.**
8. **Existing fixtures is in a wet location and a grounding conductor is not available.**
9. **Existing fixture is not on the customer's electric meter/bill.**
10. **Customer refuses.**

NONFEASIBILITY CRITERIA FOR WINDOW/WALL EVAPORATIVE COOLER INSTALLATION

1. The existing cooler is operational.
2. Proper electrical service is not present.
3. Proper exhaust ventilation is not available.
4. Substandard wiring exists (e.g., ungrounded outlets, decayed insulation, or exposed wires).
5. No feasible window or wall location available.
6. Exterior clearance requirements cannot be met.
7. Egress requirements cannot be met.
8. Wood windows are decayed or deteriorated.
9. Siding is decayed or damaged.
10. Customer refuses.

NONFEASIBILITY CRITERIA FOR REPLACEMENT REFRIGERATORS

1. **Any refrigerator to be removed was manufactured after 1992.**
2. **The electrical outlet used by the existing refrigerator is not properly grounded and cannot be properly grounded.**
3. **The refrigerator is not accessible for removal (e.g., doors from room are too small).**
4. **Floor is not level and cannot safely support a new refrigerator.**
5. **Hazard electrical conditions exist at the outlet used by the existing refrigerator.**
6. **Customer refuses.**

NONFEASIBILITY CRITERIA FOR CENTRAL FORCED AIR REPAIR AND REPLACEMENT

1. The existing furnace is inaccessible[1].
2. The property is renter-occupied.
3. Fuel used by the existing unit is not supplied by the utility providing LIEE Program services.
4. Ducts cannot be brought into compliance with Duct Sealing Standards (Section 17).
5. No furnace is present and no natural gas line or electrical outlet is available to accommodate the installation of a furnace.
6. A leaky belly-cavity or roof cavity return exists and a central return system will not be installed.
7. Customer refuses.

NONFEASIBILITY CRITERIA FOR CENTRAL FORCED AIR FURNACE REPLACEMENT

1. The existing furnace can feasibly be repaired per the Program P&P.
2. Required furnace drawing combustion air from outdoors, and/or furnace components or flue system that are listed and labeled for manufactured home installation, cannot be obtained,
3. Adequate access and/or combustion air cannot be provided.
4. Disconnected or damaged space heating ducts are present and cannot be repaired.
5. Depressurization by FAU non-ducted return system adversely affects an open combustion appliance, and correction (proper isolation of return air) is not feasible.

---

[1] See Definitions.

NONFEASIBILITY CRITERIA FOR CENTRAL FORCED AIR FURNACE REPAIR

1. Repair cost exceeds guidelines of Program P&P (i.e., cost to repair is more than 50% of the cost to replace the unit).
2. Required components listed and labeled for manufactured home installation cannot be obtained.
3. Depressurization by FAU non-ducted return system adversely affects an open combustion appliance, and correction (proper isolation of return air) is not feasible.

NONFEASIBILITY CRITERIA FOR CENTRAL AIR CONDITIONER REPLACEMENT

1. Heating system can be repaired with existing refrigeration equipment intact.
2. Electrical service requirements cannot be met.
3. System air flow is inadequate.
4. Split system refrigerant line set is inadequate.

NONFEASIBILITY CRITERIA FOR INSTALLATION REQUIRING UNDERCARRIAGE ACCESS

1. Crawl clearance is less than 18" from ground to bottom of the floor joist system or girders.
2. Any of the following conditions is present in the undercarriage area where access is required:
   - Hazardous insect or pest infestation.
   - Excessive ground moisture (standing water or mud).
   - Sewage waste on the ground or other unsanitary condition is present which poses a health and safety hazard.

NONFEASIBILITY CRITERIA FOR PROGRAMMABLE THERMOSTATS

1. The furnace is not being replaced or repaired.
2. Already present and operational.
3. The furnace is being repaired, and a properly functioning thermostat is present.
4. Already present and operational
5. Customer refuses.

NONFEASIBILITY CRITERIA FOR HVAC AIR FILTER REPLACEMENT

1. The furnace will not be repaired.
2. A serviceable filter is already present.
3. The types of filters provided by the Program are specifically prohibited by the appliance manufacturer.
4. Filter replacement would require removal of a flue, duct, or pipe.
5. The proper filter support or retaining device is not present, and installation is not feasible.
6. Customer refuses.

NONFEASIBILITY CRITERIA FOR DUCT SEALING

1. **Duct leakage is below the threshold leakage per the Duct Testing and Sealing Form.**
2. **A natural gas appliance hazard exists, and repair is not feasible.**
3. **Duct system has been abandoned.**
4. **Duct system is damaged and deteriorated beyond repair.**
5. **A health or safety hazard is present, such as insect infestation, hazardous electrical wiring, or structural hazard, which prevents safe access to the duct system.**
6. **Asbestos is present in/on the duct system.**
7. **For ducts requiring undercarriage access:**
   - **Clearance is less than 18" from ground to the floor joist system or girders.**
   - **Sewage waste is on the ground, or excessive ground moisture (standing water or mud) is present.**
8. **Forced air heating unit is inoperable and cannot be repaired.**
9. **Forced air heating unit is abandoned or inaccessible.**
10. **Customer refuses.**

NONFEASIBILITY CRITERIA FOR CENTRAL AIR CONDITIONER REPLACEMENT

1. The existing air conditioner is not operational.
2. The central AC has a SEER greater than 9.0.
3. The property is renter-occupied.
4. Existing system is a combined HVAC unit and the unit has not passed the pre-weatherization NGAT.
5. Electrical service requirements cannot be met.
6. Ducts cannot be brought into compliance with the Duct Sealing Section (Section 17).
7. Existing HVAC unit is a combined fuel unit and the gas is not provided by one of the IOUs.
8. Duct system is inadequate.
9. Split system refrigerant line set is inadequate.
10. Depressurization by the FAU non-ducted return system adversely affects an open combustion appliance, and correction is not feasible.
11. Abandonment of a leaky belly-cavity or roof-cavity return is required but not feasible.
12. Customer refuses.

NONFEASIBILITY CRITERIA FOR INSTALLATION REQUIRING UNDERCARRIAGE ACCESS

1. For ducts requiring undercarriage access:
2. Clearance is less than 18" from ground to the floor joist system or girders.
3. Any of the following conditions is present in the undercarriage area where access is required:
   - Hazardous insect infestation.
   - Excessive ground moisture (standing water or mud).

- **Sewage waste on ground or other unsanitary conditions posing a health and safety hazard.**

NONFEASIBILITY CRITERIA FOR PROGRAMMABLE THERMOSTATS

1. **A programmable thermostat is already present and operational.**
2. **Customer refuses.**

NONFEASIBILITY CRITERIA FOR HIGH EFFICIENCY WINDOW/WALL AIR CONDITIONERS

1. **Unit is already present and operational, and is less than 15 years old.**
2. **Electrical requirements cannot be met.**
3. **A structurally sound mounting platform and/or suitable location is not available.**
4. **Customer refuses.**

NONFEASIBILITY CRITERIA FOR HIGH EFFICIENCY WINDOW/WALL AIR CONDITIONERS

5. **Unit is already present and operational, and is less than 15 years old.**

6. **Electrical requirements cannot be met.**

7. **A structurally sound mounting platform and/or suitable location is not available.**

8. **Customer refuses.**

NONFEASIBILITY CRITERIA FOR NATURAL GAS WATER HEATER REPLACEMENT

1. The property is renter-occupied.
2. Fuel used by the existing unit is not supplied by the utility providing LIEE Program services.
3. The existing water heater:
   -
   - Is inaccessible[1], or
   - Can be feasibly repaired (i.e., cost to repair is less than 50% of the cost to replace the unit).
4. Drain line for T&P valve or drain pan cannot be properly terminated beneath the mobile home.
5. Required access, clearance, or combustion air cannot be provided.
6. Structure/floor cannot properly and safely support the installation.
7. No suitable mounting locations for seismic bracing available.
8. A safety hazard is present which cannot be repaired (e.g., vent system defect, nonconforming gas piping,).
9. A watertight pan cannot be installed under the unit when required.
10. A plumbing condition exists which prevents achieving satisfactory water pipe connections.
11. Customer refuses.

[1] See Definitions.

NONFEASIBILITY CRITERIA FOR NATURAL GAS WATER HEATER REPAIR

1. **The property is renter-occupied.**
2. **Fuel used by the existing unit is not supplied by the utility providing LIEE Program services.**
3. **The existing water heater will be replaced.**
   - **Cost to repair is more than 50% of the cost to replace the unit.**
   - **The tank leaks.**
4. **A safety hazard is present which cannot be repaired.**
5. **Required access is not available or proper combustion air cannot be provided.**
6. **Customer refuses.**

9. REPLACEMENT MATERIALS

- **Material Requirement**
  - Windows shall be In conformance with one or more of the following:
    - AAMA/NWWDA 101/I.S.2-97; NWWDA I.S. 2-93, 3-95, or 8-95; or ANSI/AAMA 101-93.
  - Window unit shall be of a design which is appropriate for mobile home installation.
- **Thermal Performance**
  - Window unit shall have a U-value of 0.75 or lower. Conformance with Title 24 standards recommended (Table 12-1).
  - Window shall bear an NFRC thermal performance label and a permanent label attached to the frame.
- **Replacement Selection**
  - Flanged windows shall be replaced with flanged windows.
  - Horizontal sliders shall be replaced with horizontal sliders.
  - Vertical sliders shall be replaced with vertical or horizontal sliders.
  - Picture windows (fixed sash) shall be replaced with picture windows or sliders.
  - Jalousies shall be replaced with vertical or horizontal sliders.
- **Insect Screens**
  - All openable windows shall be equipped with insect screens.

TABLE 4-1: TITLE 24 REPLACEMENT WINDOW MINIMUM REQUIREMENTS

EFFICIENCY FACTOR	CLIMATE ZONE	MAXIMUM VALUE
Solar Heat Gain Coefficient (SHGC)	2, 4, & 7 – 15	0.40
	1, 3, 5, 6, 16	No Requirement
U-Factor	16	0.55
	1, 2, 10 – 16	0.57
	3 – 9	0.67

ELECTRIC WATER HEATERS

15. THERMOSTATS AND IDENTIFICATION LABEL

- **Upper and Lower Thermostats and ID Label**
  - **Locations shall be identified and made easily accessible.**
    - **Blanket shall be cut on sides and bottom to create a top-hinged flap over each thermostat cover plate.**
    - **Flap shall be held closed with tape installed along bottom slit.**
    - **Each flap shall be labeled in permanent ink: "Thermostat" or "ID Label".**
- **Identification Label**
    -
  - **Flaps shall be held closed with tape.**
    - **A minimum of one tape strip shall be installed along slit opposite flap hinge.**
    - **All slits longer than 12" shall be secured with tape installed lengthwise along the slit.**
  - **Flaps shall be labeled in permanent ink to identify what is underneath.**

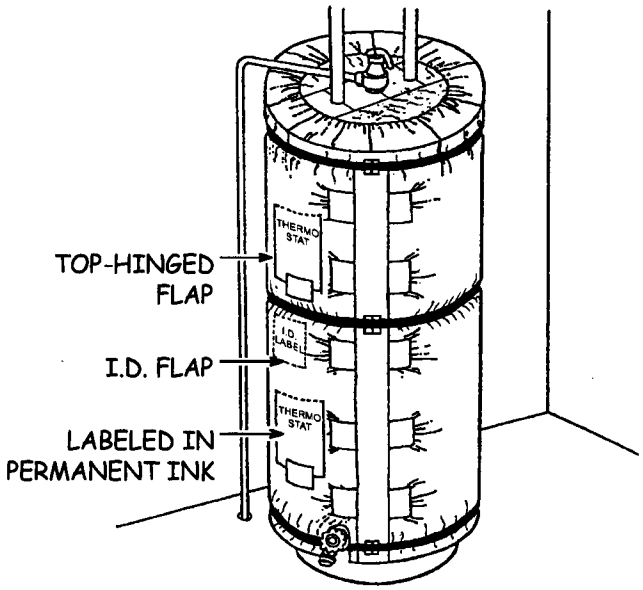

WATER HEATER PIPE INSULATION STANDARDS

1. APPROVED MATERIALS

- **All Materials**
  - Maximum flame-spread index of 25 and maximum smoke-developed index of 50, per ASTM E84, or UL 723, or NFPA 255.
- **Insulation**
  - Preformed foam (e.g. closed cell polyethylene) conforming to ASTM C534.
  - Inside diameter of preformed material shall be appropriate for the size pipe being insulated.
  - Minimum thermal performance rating of 180°F.
- **Tape**
  - Tape specified by insulation manufacturer, or
  - Minimum 2" wide pressure-sensitive metallic tape meeting or exceeding strength and adhesive requirements of UL 181A-P or UL 181B-FX.
  - Cloth duct tape and electrical tape are <u>not</u> allowed.
- **Ties**
  - Plastic cable ties.

PREFORMED FOAM PIPE INSULATION

2. **R-VALUE OF PIPE INSULATION**
   - **R-4 minimum for pipes less than or equal to 2" in diameter.**
     - Minimum 1" insulation wall thickness.
     - *Exception:* 3/4" wall thickness acceptable if R-value requirement is met.

3. **SHEET OR SEMI-MOLDED INSULATION**
   - **All Units**
     - Not allowed.

4. **HEAT TAPE OR STRAP INSULATION**
   - **All Units**
     - Not allowed.

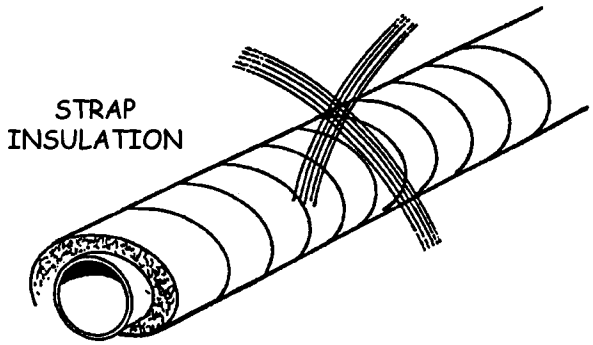

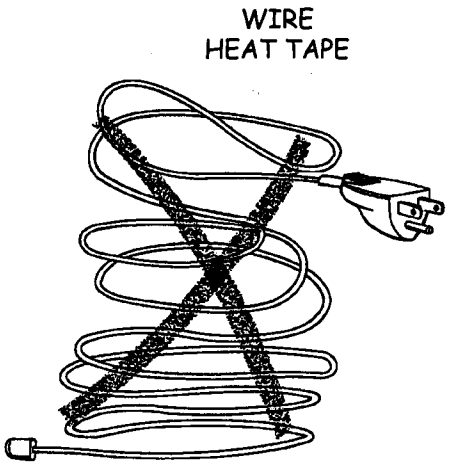

10. GENERAL ATTACHMENT REQUIREMENTS

- **Insulation shall be firmly secured with plastic ties, tape, wire, or sleeves.**
- **All slits and joints shall be glued or taped to achieve complete closure.**
- **All material shall be corrosion-resistant.**
- **Tape shall be used on bends, 90° elbows, and joints.**

11. GLUE FOR ATTACHMENT

- **Glue shall be compatible with insulation and manufacturer's instructions.**

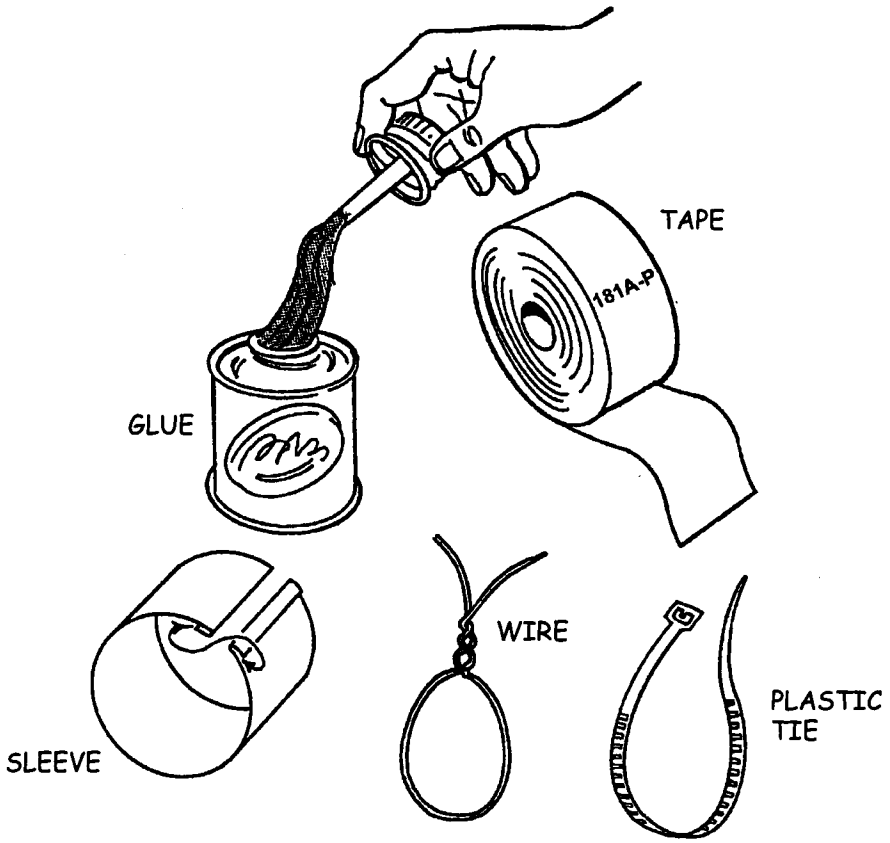

ENERGY-SAVER SHOWERHEAD AND FAUCET AERATOR STANDARDS

1. APPROVED MATERIALS

- **Showerheads and Aerators**
  - Conformance to ASME A112.18.-2203.
  - Compliance with CEC (Title 24) Residential Manual Section 5.2.5.
- **Showerheads**
  - "Self-cleaning" type or cleanable without being unscrewed from the showerarm.
  - Non-aerating type.
  - Ball joint shall be metal (e.g., chrome-plated brass).
  - Ball joint shall be made of the same material as showerarm.
- **Showerarm Adapters**
  - Adapter shall be metal (e.g. chrome-plated brass).
  - Minimum 5/8" long male pipe threads with a minimum taper of 3% on showerhead end.
- **Aerators**
  - Shall be metal (e.g., chrome-plated brass).

2. WARRANTY

- **Showerheads and Aerators**
  - Minimum three-year warranty.

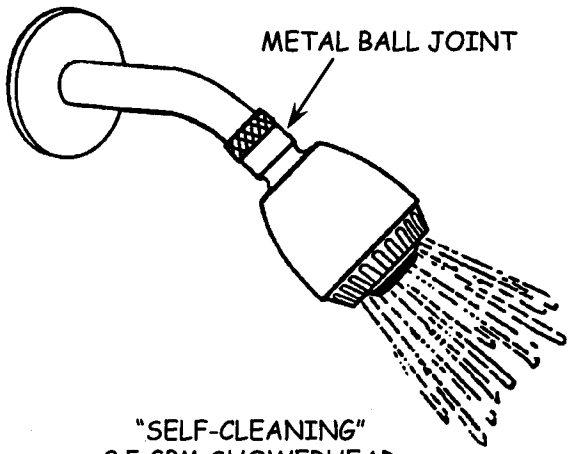

"SELF-CLEANING"
2.5 GPM SHOWERHEAD

3. **FLOW RATE**
   - **Showerheads**
     - Maximum flow rate: 2.50 gpm at 80 psi.
     - Minimum flow rate: 2.0 gpm at 40 psi.
   - **Faucet Aerators**
     - Maximum flow rate: 2.2 gpm at 60 psi.

4. **SHOWERHEAD FLOW CONTROL**
   - **Flow-restricting devices shall be factory-installed and mechanically-retained (e.g., with a retaining ring or expansion seat), requiring 8 lbs. or more of pulling force to remove.**
   - **Removable flow restrictors are <u>not</u> allowed.**

5. **INSTALLATION**
   - **Functional Showers**
     - Energy-saver showerheads shall be installed on all functional showers that have flow rates greater than 3.0 gpm.
   - **Nonfunctional Showers**
     - Energy-saver showerheads shall <u>not</u> be installed on showers which are <u>not</u> functional due to plumbing or physical defects.

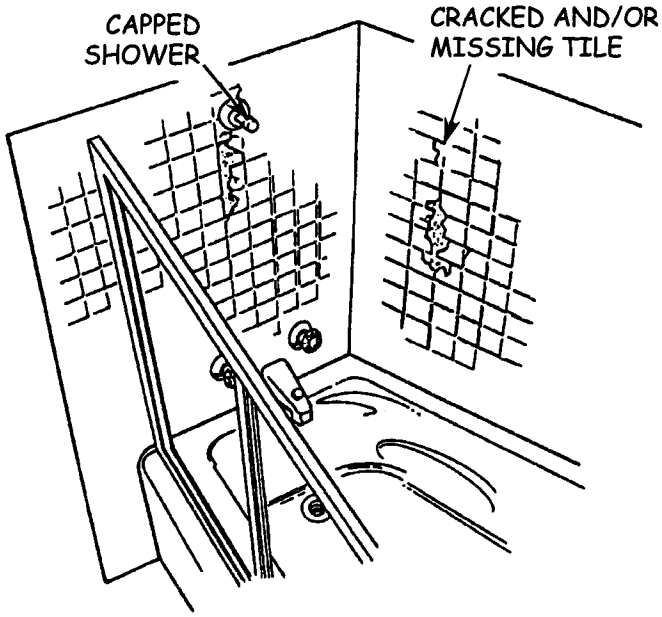

NONFUNCTIONAL SHOWER

SECTION 12

THREAD-BASED COMPACT FLUORESCENT LAMP STANDARDS

1. **MATERIALS**
   - **Compact Fluorescent Lamps (CFLs) must be:**
     - **ENERGY STAR® qualified.**
     - **Warranted for one year from date of purchase.**

2. **INSTALLATION**
   - **All Types**
     - **All lamps, without exception, shall be installed by the contractor.**
     - **Only incandescent and halogen lamps shall be replaced.**
     - **Manufacturer's recommendations shall be followed.**

ALL UNITS MUST MEET OR EXCEED
ENERGY STAR PROGRAM EFFICIENCY STANDARDS

7. **CLUSTER LIGHTING**
   - **All Types**
     - **CFLs shall <u>not</u> be installed in chandeliers or other cluster lighting fixtures unless the CFL is specifically designed for such applications.**
     - **The fixture shall remain level after installation of the CFL.**

8. **DIMMERS, PHOTOSENSORS, AND OCCUPANCY SENSORS**
   - **All Types**
     - **Only CFLs rated for use with dimmers, photosensors, and occupancy sensors shall be installed in fixtures controlled by such devices.**

9. **TIMERS**
   - **Mechanical**
     - **CFLs may be installed in fixtures equipped with mechanical timers.**
   - **Solid State**
     - **CFLs shall <u>not</u> be installed in fixtures equipped with solid state timers.**

10. **LAMP CORD SUPPORTED**
    - **All Types**
      - **CFLs shall <u>not</u> be installed in fixtures supported only by a lamp cord unless the manufacturer allows the use of CFLs in such fixtures.**

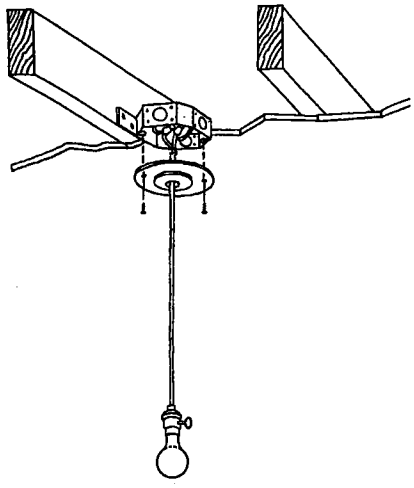

SECTION 13

HARD-WIRED COMPACT FLUORESCENT FIXTURE STANDARDS

1. **MATERIALS**
   - **Fixture ballast must be UL listed (UL 935) Class-P.**
   - **CFLs must be ENERGY STAR® qualified.**
   - **Compact fluorescent lamp (CFL) tube glass and other housing materials must be UV resistant and heat stable.**
   - **Hardwired fixtures and lamps must be fully warranted for one year from date of purchase.**
   - **Fixture must allow for lamp replacement and utilize Title 24-compliant high efficacy (e.g., pin-based) lamps meeting the following standards:**
     - **40 Lumens/watt — lamps 15 watts or less**
     - **50 Lumens/watt — lamps over15 watts to 40 watts**
     - **60 Lumens/watt — lamps over 40 watts**

2. **INSTALLATION**
   - **All fixtures shall be installed:**
     - **In accordance with the current NEC and local codes.**
     - **In a manner which prevents water from entering or accumulating in wiring compartment, lamp holder or electrical parts.**
   - **All wiring, conduit, accessories, fasteners, and controls used in exterior locations shall be designed for exterior use.**

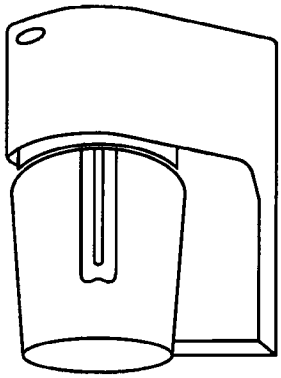

WALL-MOUNT
FLUORESCENT FIXTURE
WITH PHOTO CELL CONTROL

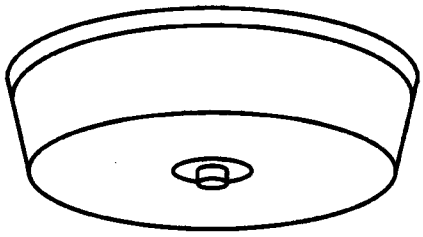

CEILING-MOUNT
COMPACT FLUORESCENT
REPLACEMENT FIXTURE

11. **LOCATION (continued)**
    - **Exterior Clearance**
        - **Clearance shall comply with requirements of authority having jurisdiction (HCD or local building department).**
        - **Cooler air intake shall be located:**
            - **Minimum of 3' from the gas meter.**
            - **Minimum of 3' away from combustion appliance flue/vent terminations.**
            - **Minimum of 10' away from:**
                - **Plumbing vent terminations.**
                - **Clothes dryer moisture exhaust termination.**
                - **Exhaust fan vent termination.**
        - **Unit shall <u>not</u> be installed if clearance requirements cannot be met.**

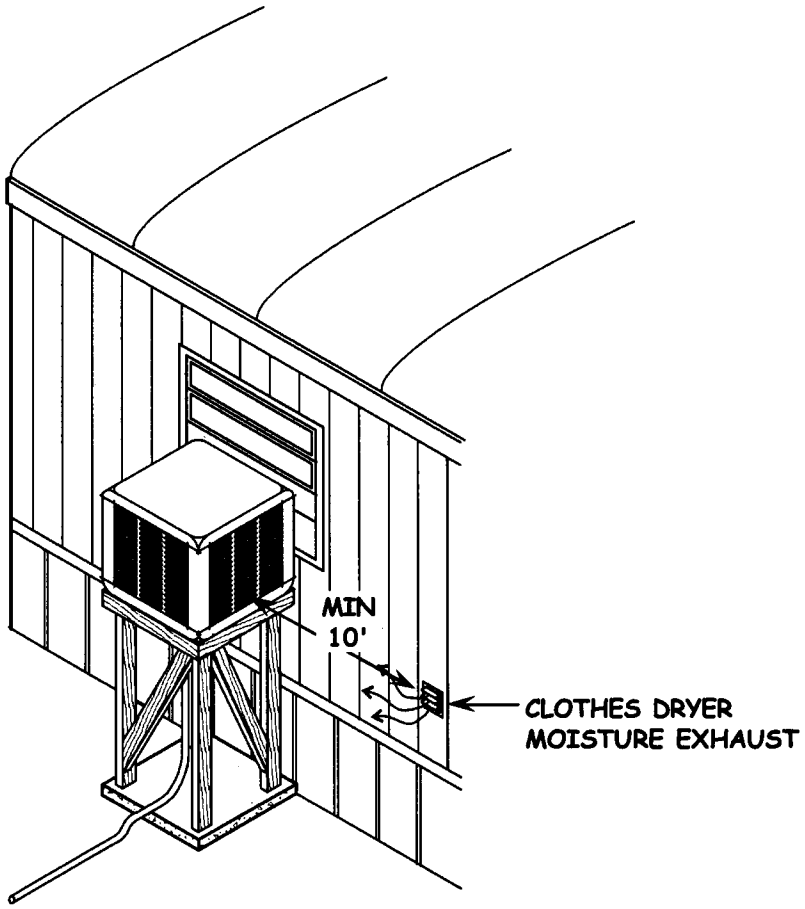

11. **LOCATION (continued)**
   - **Sidewalk Clearance**
     - **Unit shall not extend into sidewalk clearance zone (i.e., over sidewalk).**
     - **Clearance from sidewalk shall be 21" if allowed by local code.**

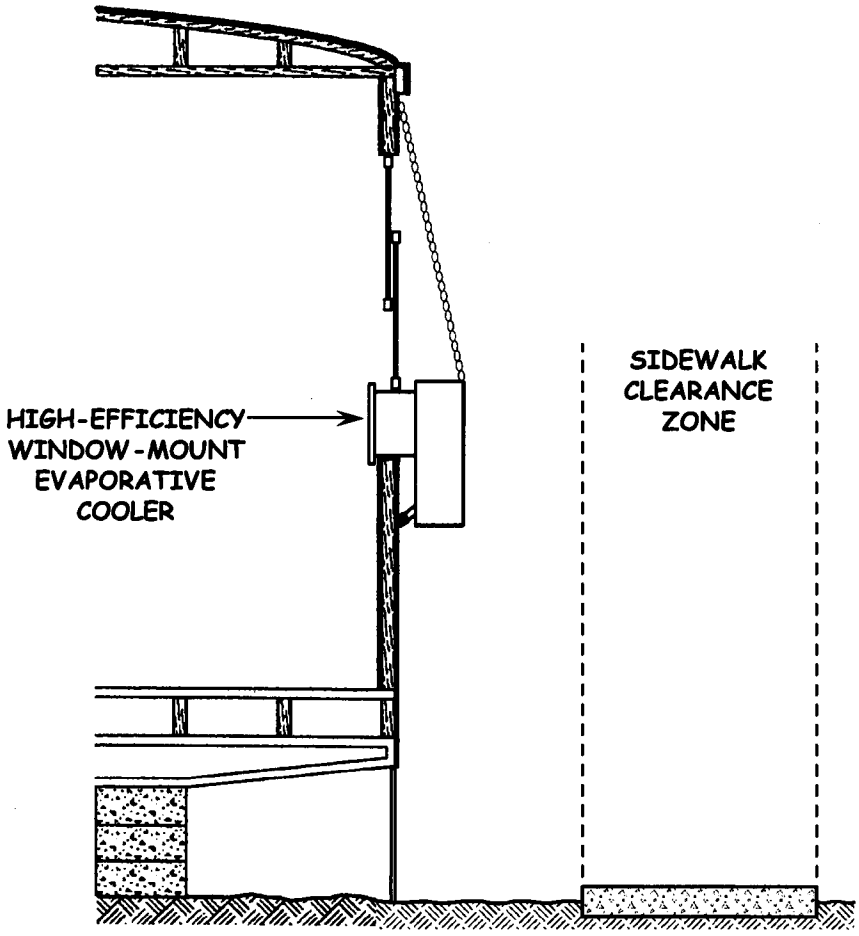

12. **COOLER SUPPORTS (continued)**
    - **Platform Supports**
        - **Platform shall:**
          Be braced and stable.
          Rest on concrete pad or masonry supports.
        - **Materials for wooden platforms shall be:**
          Exterior grade.
          Sealed with exterior primer and paint.
          Separated from the earth (e.g., by concrete).

13. **ATTACHMENTS**
    - **Units shall be attached with noncorrosive screws or lag bolts.**
        - **Nails and molly bolts <u>not</u> allowed.**
        - **Anchors shall penetrate framing members a minimum of 3/4" (1" if self-drilling screws).**
    - **Attachment shall comply with manufacturer's minimum specifications, however:**
        - **Noncorrosive screws or lag bolts shall be used.**
        - **Nails and molly bolts are <u>not</u> allowed.**
    -

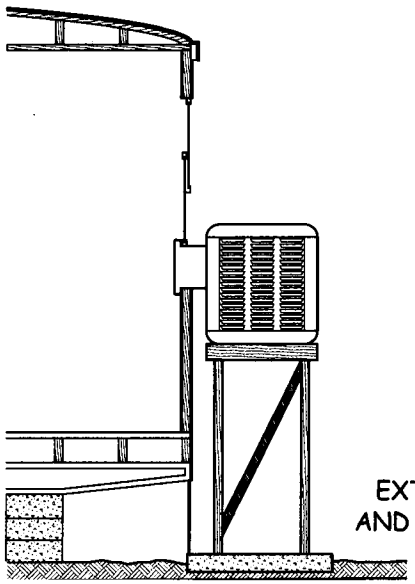

WOODEN PLATFORM
EXTERIOR GRADE, SEALED,
AND SEPARATED FROM EARTH

SECTION 15

REPLACEMENT REFRIGERATOR STANDARDS

1. **REPLACEMENT REFRIGERATOR**
   - **All units shall be:**
     - **UL listed.**
     - **ENERGY STAR® qualified.**
     - **Frost free.**
   - **Capacity**
     - **Replacement refrigerator size shall be approximately equal to that of existing unit.**
     - **Two refrigerators and/or freezers exchanged for a single refrigerator may be replaced with a unit no larger than 23 cu ft.**

2. **WARRANTY**
   - **All Units**
     - **Shall have a minimum 1 year warranty parts and labor.**

ENERGY GUIDE LABEL
WITH
ENERGY STAR® LOGO

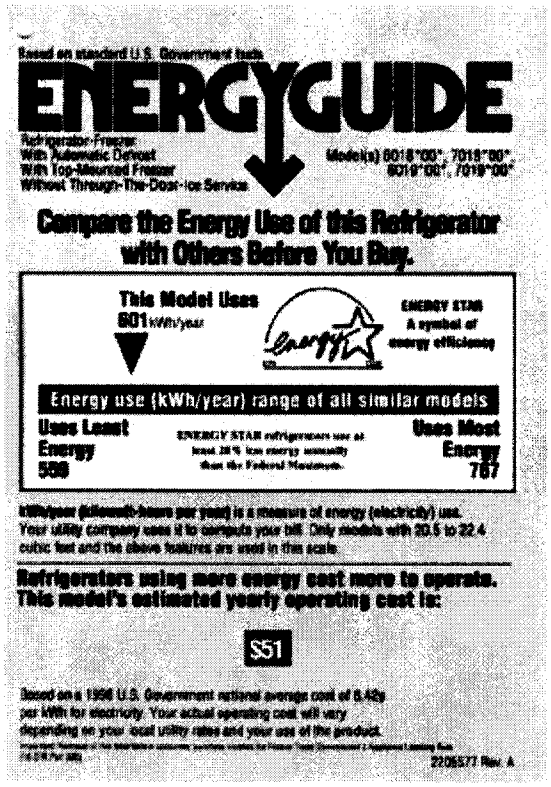

6. ELECTRICAL REQUIREMENTS

- **Electrical Circuit**
  - **Overcurrent protection and size of conductors shall be in conformance with manufacturer's specifications and local code.**
  - **A GFCI-protected circuit or receptacle shall <u>not</u> be used.**
- **Electrical Outlet**
  - **Refrigerator shall be plugged into its own individual electrical outlet (not shared with another appliance).**
  - **The receptacle and cover plate shall be in good condition.**
  - **The receptacle shall be properly grounded in conformance with the California Electrical Code (CEC) and local code.**
- **Extension Cord**
  - **An extension cord may be used when allowed by manufacturer's instructions and with prior approval of Program Manager.**
  - **Extension cord shall be:**
  - **UL listed, 3-conductor cord, with 3-prong plug and receptacle.**
  - **Minimum 14 AWG.**
  - **Maximum 6' in length.**
- **Appliance cord and extension cord shall not be located where either can create a walking hazard (where people can trip).**

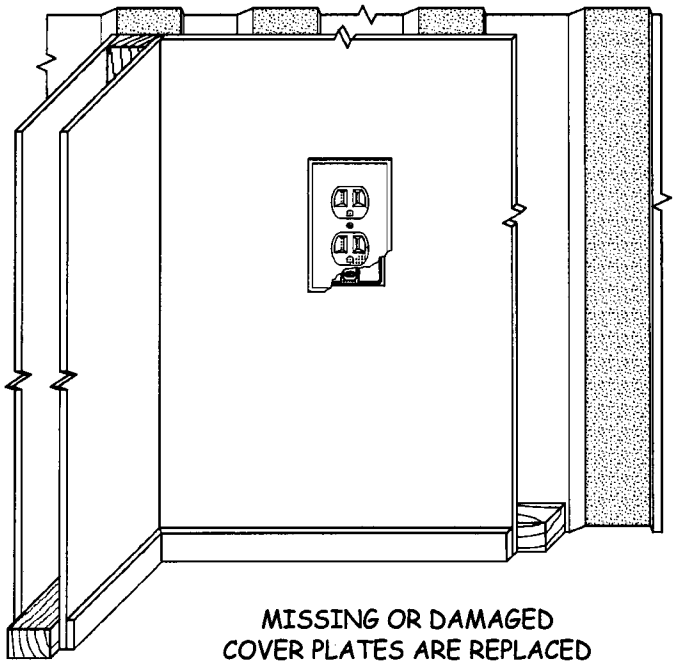

MISSING OR DAMAGED
COVER PLATES ARE REPLACED

SECTION 19

WALL AND WINDOW AIR CONDITIONER STANDARDS

1. **MATERIALS**
   - **All Units**
     - **Unit shall be UL listed and equipped with:**
       - **Minimum two-speed fan.**
       - **Adjustable thermostat with a minimum of six positions.**
       - **Removable, washable foam filler.**
       - **Air directional control, minimum four-way.**
     - **Must be ENERGY STAR® qualified.**
     - **Must have a minimum EER rating of 10.7.**
   - **Wall Units**
     - **Must be equipped with thru-the-wall chassis (sleeve).**

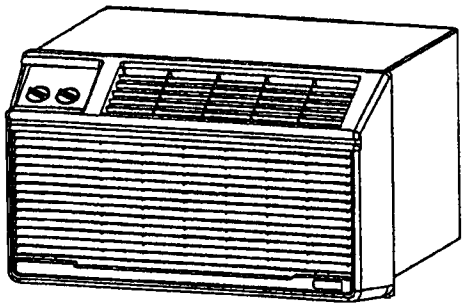

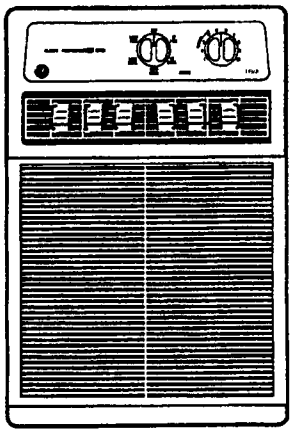

2. **WARRANTY**
   - **All Installations**
     - **Parts and labor shall be covered by a minimum one (1) year written warranty.**
     - **Compressor warranty shall extend to five (5) years.**
     - **All written warranty information and manufacturer's operating and maintenance instructions shall be supplied to the customer.**

3. **MANUFACTURER'S INSTRUCTIONS**
   - **Installer shall:**
     - **Review manufacturer's instructions before beginning the installation.**
     - **Properly install the air conditioner in accordance with those instructions.**

4. **MAXIMUM SIZE UNIT**
   - **Replace like-for-like: The Btu output of the new unit shall match the Btu output of the unit being replaced (± 500 Btu).**
   - **Unit may be down-sized with prior approval of Program Manager, but the new unit must comply with the chart below.**

AREA TO BE COOLED (SQ. FT.)	CAPACITY (BTU/HR)*
100 TO 150	5,000
151 TO 250	6,000
251 TO 300	7,000
301 TO 350	8,000
351 TO 400	9,000
401 TO 450	10,000
451 TO 500	12,000
501 TO 700	14,000
701 TO 1000	18,000

***Adjustments to make:**
- **If the room is heavily shaded, reduce capacity by 10 percent.**
- **If the room is very sunny, increase capacity by 10 percent.**
- **If more than two people regularly occupy the room, add 600 Btu/Hr for each additional person.**
- **If the unit is for a kitchen, increase capacity by 4,000 Btu/Hr.**

11. MINIMUM HEIGHT

- All Units
  - Unit shall be installed only in a window or wall opening.
  - Exterior portion of unit shall be located a minimum of 2' above grade.
- Wall-Mount Units
  - Air discharge outlet shall be located a minimum of 3' above the floor unless mounted below a window.
  - Shall be installed in existing location if the location meets requirements of local code, and is:
    - 18" above floor if:
      - ? Discharge grille is equipped with directional louvers, and
      - ? Location is allowed by manufacturer.

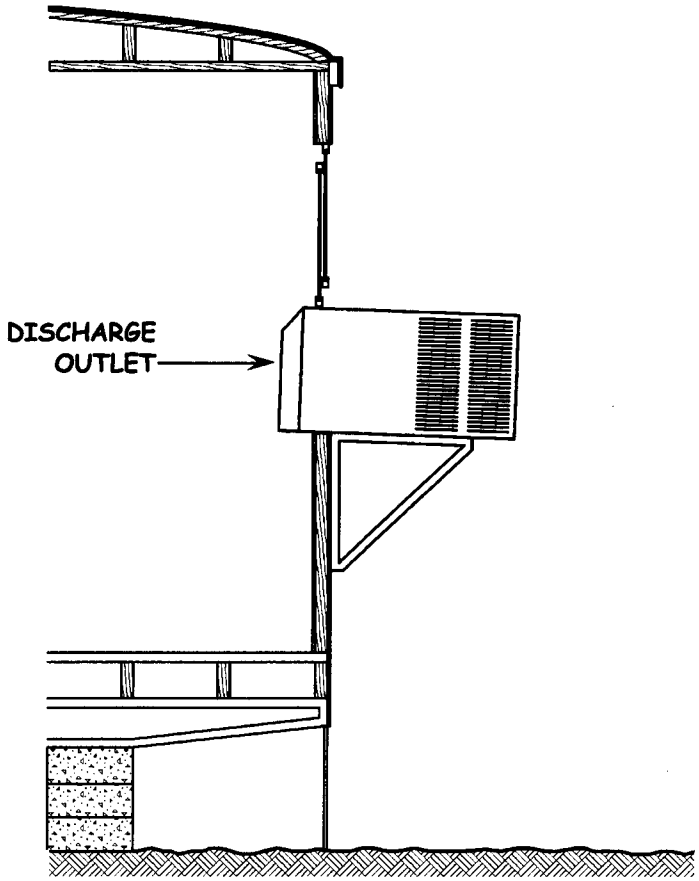

12. LOCATION

- **Window-Mount Units**
  - **All Windows**
    - **Air conditioner shall be placed in center of window opening.**
    - **Permanent window panels shall be installed to completely fill empty spaces over 12" wide.**
    - **Side window panels over 12" wide shall be transparent.**
    - **Window panels shall be sealed in place.**
    - **Unit shall be placed on north or east side of home out of direct sun when possible.**
    - **Place unit in the shade of trees and shrubs when feasible.**
  - **Double-Hung Windows**
    - **Air conditioner shall be installed in lower sash opening.**
    - **Lower sash shall seal against unit and side panels.**

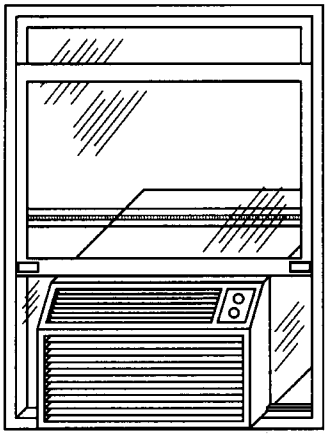

AIR CONDITIONER CENTERED
IN WINDOW OPENING

12. **LOCATION (continued)**
   - **Exterior Clearance**
     - **Unit's air intake shall be located at least 3' away from the following:**
       - **Open combustion appliance (e.g. water heater, slab-mount HVAC package unit, etc.).**
       - **Combustion appliance flue/vent terminations.**
       - **Plumbing vent terminations.**
       - **Gas meter.**
     - **Unit's air intake shall be located at least 10' away from:**
       - **Clothes dryer moisture exhaust termination.**
       - **Plumbing vent terminations.**
       - **Exhaust fan vent termination.**
     - **Property setback requirements shall <u>not</u> be violated.**
     - **Unit shall be free of obstructions, such as landscaping, plants, structures, etc.**
   - **Interior Clearance**
     - **Unit shall be free of obstructions, such as furniture, curtains, plants, etc.**
   - **Unit shall not be installed if clearance requirements cannot be met.**

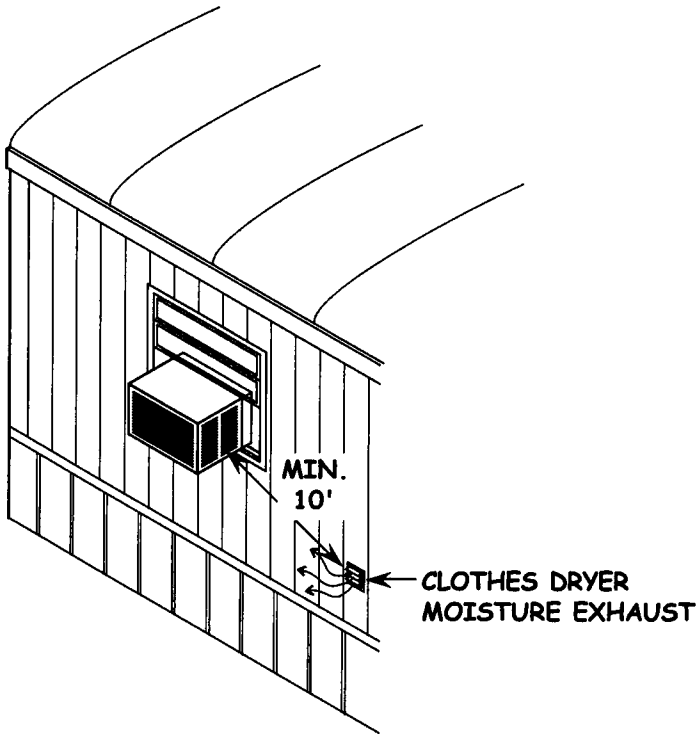

NATURAL GAS WATER HEATER REPLACEMENT STANDARDS

1. MATERIALS

- **Water Heaters**
  - Natural gas-fueled storage or instantaneous (tankless) type.
  - Minimum Energy Factor (EF) shall be in compliance with Title 24 energy efficiency requirements, per Table 25-1.
  - Listed and labeled in conformance with HCD regulations.
  - Manufactured to ANSI Z21.10.1 or ANSI Z21.10.3.
- **Vent Systems**
  - UL listed vent connectors, components, and Type B vent pipes.
  - Nonmetallic systems shall conform to ASTM D 1785 and D 2665.
- **Gas Piping and Valves**
  - Gas valves shall be listed (e.g., by UL) and AGA or CSA certified.
  - Flexible connectors shall be listed (e.g., by IAPMO) epoxy-coated or stainless steel units.
  - Fuel-gas gas piping shall comply with 2001 CMC Chapter 13.
  - Copper gas lines and butt-soldered joints <u>not</u> allowed.

2. WARRANTY

- **Minimum five (5) year written manufacturer's warranty.**
- **Minimum one (1) year written labor and parts warranty.**

TABLE 25-1: MINIMUM ENERGY FACTOR

WATER HEATER TYPE	VOLUME (GALLONS)	MINIMUM EF
Gas Storage	30	0.61
	40	0.59
	50	0.58
Gas Instantaneous	—	0.62

3. **GENERAL REQUIREMENTS**
   - **A permit for the installation shall be obtained from and finalized by HCD.**
   - **Installation shall be in conformance with:**
     - Product listing.
     - Manufacturer's instructions and specifications.
     - The California Mechanical Code (CMC), California Plumbing Code (CPC), or as specified by HCD.
   - **Orifice shall be verified to be sized for natural gas.**

4. **WATER HEATER SIZING**
   - **Replacement water heater capacity, the First Hour Rating, shall comply with the greater of:**
     - Manufacturer's sizing recommendations, or
     - HCD requirements, and
     - Storage units shall be no less than the 2000 Uniform Plumbing Code (UPC) minimum guidelines, as shown in the table below.

5. **LOCATION**
   - **Clearances shall be in compliance with listing requirements, manufacturer's instructions, and HCD regulations.**
   - **Location shall be structurally sized/constructed to safely support the weight of the tank.**

MINIMUM CAPACITY FOR WATER HEATERS
FIRST HOUR RATING TABLE
BASED ON THE
2000 UNIFORM PLUMBING CODE (UPC) TABLE 5-1

Number of Bathrooms	1 to 1.5			2 to 2.5				3 to 3.5			
Number of Bedrooms	1	2	3	2	3	4	5	3	4	5	6
First Hour Rating*	42	54	54	54	67	67	80	67	80	80	80

***First Hour Rating, the water heating capacity expressed in gallons, is the amount of hot water the heater can supply per hour (starting with a tank full of hot water). The First Hour Rating is shown on the yellow EnergyGuide label.**

10. TEMPERATURE AND PRESSURE (T&P) RELIEF VALVE

- **A T&P relief valve shall be installed in conformance with the water heater manufacturer's instructions and applicable code.**
- **The T&P relief valve shall:**
  - Be listed and manufactured to ANSI Z21.22.
  - Meet the sizing/pressure requirements of the water heater listing.
- **T&P Relief Valve Drain Line**
  - Line shall be galvanized steel, hard drawn copper, or CVPC.
  - Internal diameter of the line and fittings shall equal or exceed diameter of the relief valve outlet.
  - The drain line shall:
    - Terminate beneath the mobile home, with the end unthreaded and visible for inspection.
    - Drain fully by gravity and <u>not</u> be trapped.

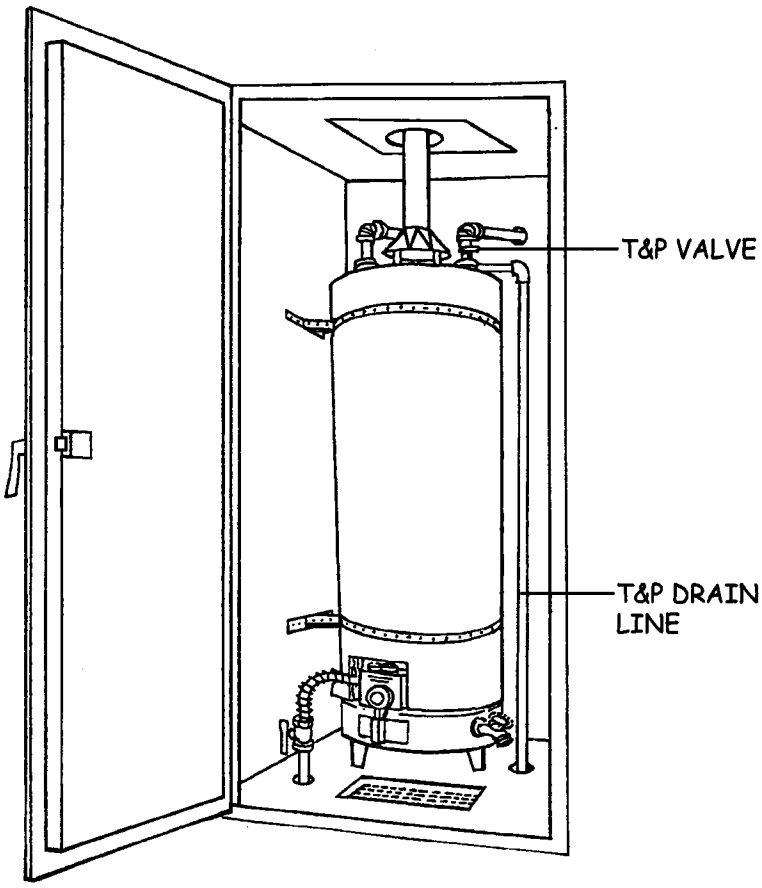

© RHA • 1/1/04 (Rev. 10/20/05)

SECTION 1

NATURAL GAS APPLIANCE TESTING (NGAT) STANDARDS

PART 1: GENERAL CRITERIA

1. **TEST EQUIPMENT AND ACCESSORIES**
   - **Carbon Monoxide Analyzers**
     - **Shall be manufactured under an ISO 9001 quality management system or be ISO 9001 Certified.**
     - **Must, at a minimum, measure CO levels from zero ppm to 999 ppm.**
   - **Test Equipment Calibration**
     - **Carbon monoxide analyzers shall be maintained and calibrated in accordance with manufacturer's specifications.**

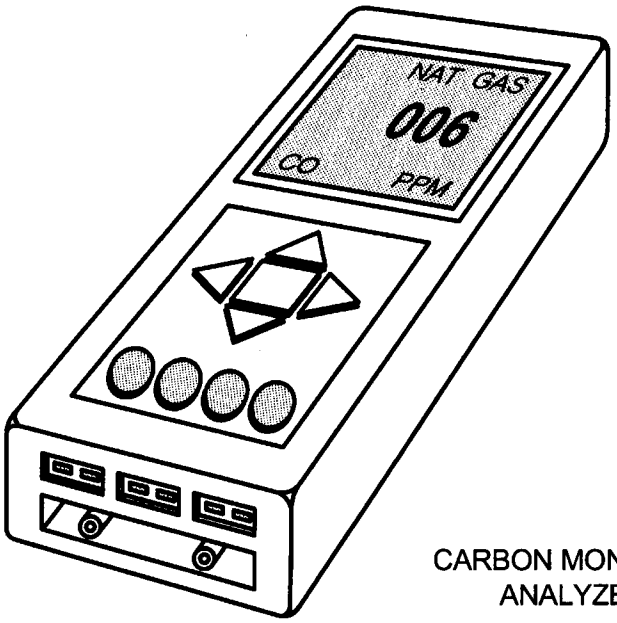

CARBON MONOXIDE ANALYZER

2. NGAT APPLICABILITY

- **In homes receiving infiltration reduction measures, NGAT shall be conducted when the home:**
  - **Is heated with natural gas, or**
  - **Has one or more other natural gas appliances affecting the living space.**
- **NGAT shall be conducted for all natural gas appliances affecting the living space *except* appliances that are: (a) abandoned*, or (b) inaccessible*.**
- **Natural Gas Appliances Affecting the Living Space**
  - **Appliances affecting the living space are (a) all space heating appliances, and (b) other appliances in the following locations:**
    - **Partially or entirely within the living space (including closets located within the envelope but accessed from outdoors).**
    - **An attached garage.**
    - **An outdoor location within 4' of an operable door or window leading into the living space.**
    - **A location where combustion products from the appliance could infiltrate a forced air duct system (e.g., through a return leak).**
  - **Appliances in all other locations are considered to be appliances not affecting the living space.**
- **Natural Gas Appliances Not Affecting the Living Space**
  - **Only checks for gas leaks are performed.**

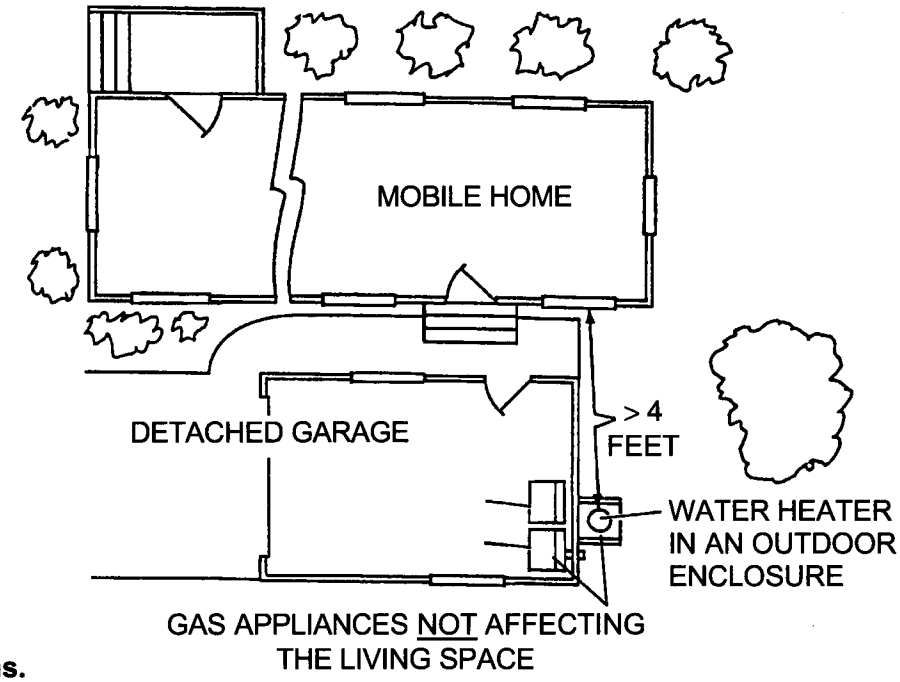

***See Definitions.**

PART 2: PRE-WEATHERIZATION EVALUATIONS

3. PRE-WEATHERIZATION ASSESSMENT

- **The assessment process shall include a check of the following:**
  - **Gas leaks (Item 4)**
  - **Inadequate CVA (Item 5)**
  - **Inadequate clearance between water heater vent termination and evaporative cooler inlet (Item 6)**
  - **Other improper flue/vent terminations (Item 6)**
  - **Inoperable or inaccessible gas appliance (Item 7)**
  - **Gas clothes dryer in the living space not exhausted outdoors (Item 7)**
  - **Unvented combustion space heater in the living space (Item 7)**
  - **Open combustion space or water heating appliance in the living space (Item 7).**
  - **Improper gas-cooking area ventilation (Item 7)**
  - **Defective isolation of return air (Item 7)**
- **Before weatherization work commences, (a) gas leaks shall be repaired, (b) inoperable appliances shall be checked by a utility gas service technician (or designee), and (c) all vent termination clearances/defects and combustion air deficiencies shall be confirmed feasible to correct.**

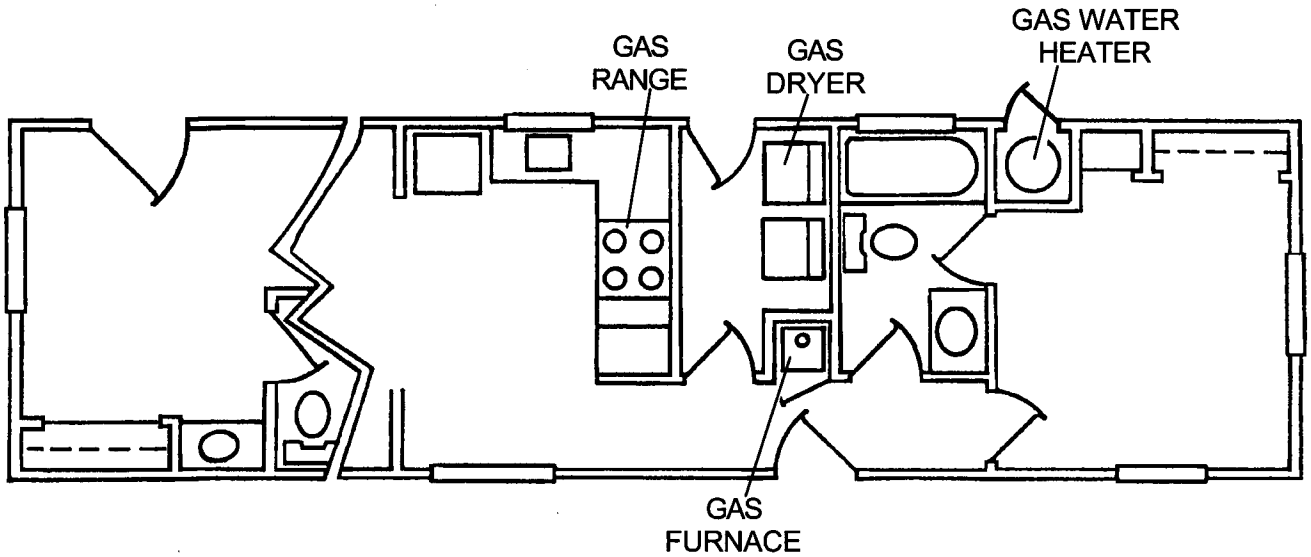

4. GAS LEAKS

- **Natural gas appliances shall be checked for gas leaks.**
- **Acceptable methods include the following:**
  - **Olfactory (Sniff) Test performed above, but within 2' of, all valves and fittings.**
  - **Application of leak detection liquid to line valves and to fittings on valves, flexible gas connectors, and pipes.**
  - **Air sampling with electronic leak detection equipment near valves, fittings, flexible gas connectors, and pipes.**
- **Gas leaks shall be repaired by a utility gas service technician (or designee).**

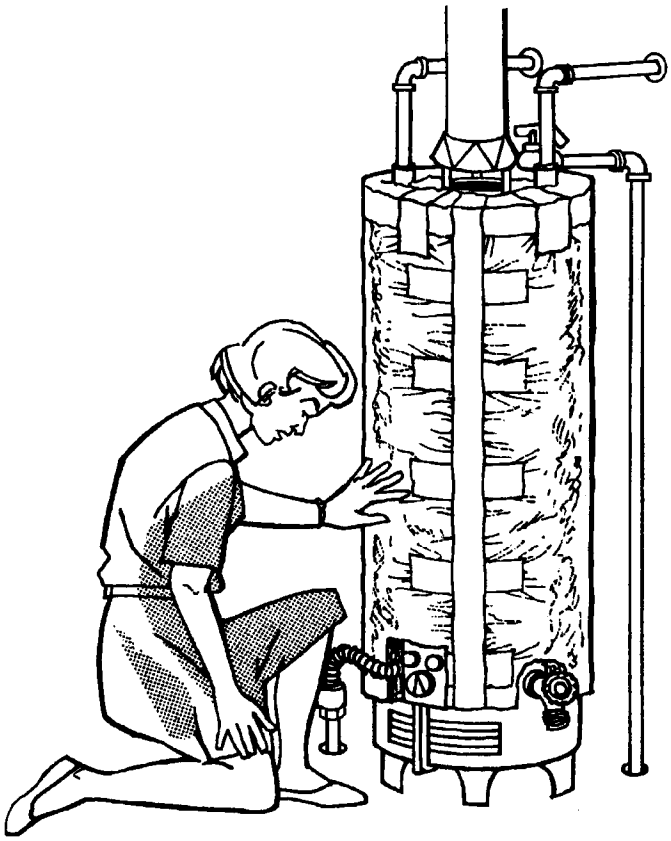

CHECKING FOR NATURAL GAS ODOR

5. COMBUSTION AND VENTILATION AIR (CVA) EVALUATION

- **CVA shall be evaluated for open combustion natural gas heating systems and water heaters (cooking appliances and clothes dryers are *excluded*).**
- **CVA shall comply with these guidelines and Appendix A.**
- **Appliances Drawing *Outdoor* Air through Combustion-Air Openings or Ducts**
  - **An upper opening or duct shall be located above the draft hood, and a lower opening or duct shall be located within 12" of the floor.**
  - **Combustion air openings and vertical ducts shall each provide 1 sq. in. net free venting area (NFVA) per 4,000 Btu/hr of input.**
  - **Horizontal ducts shall each provide 1 sq. in. NFVA per 2,000 Btu/hr of input.**
  - **Combustion air may also be obtained through a <u>single</u> <u>upper</u> vent or duct to outdoors under the following conditions:**
    - **Vent NFVA is at least: (a) 1 sq. in. per 3,000 Btu/hr input, and (b) not less than the sum of the cross-sectional areas of all vent connectors in the space.**
    - **Equipment has clearances of at least 1" sides and back, and 6" in front.**

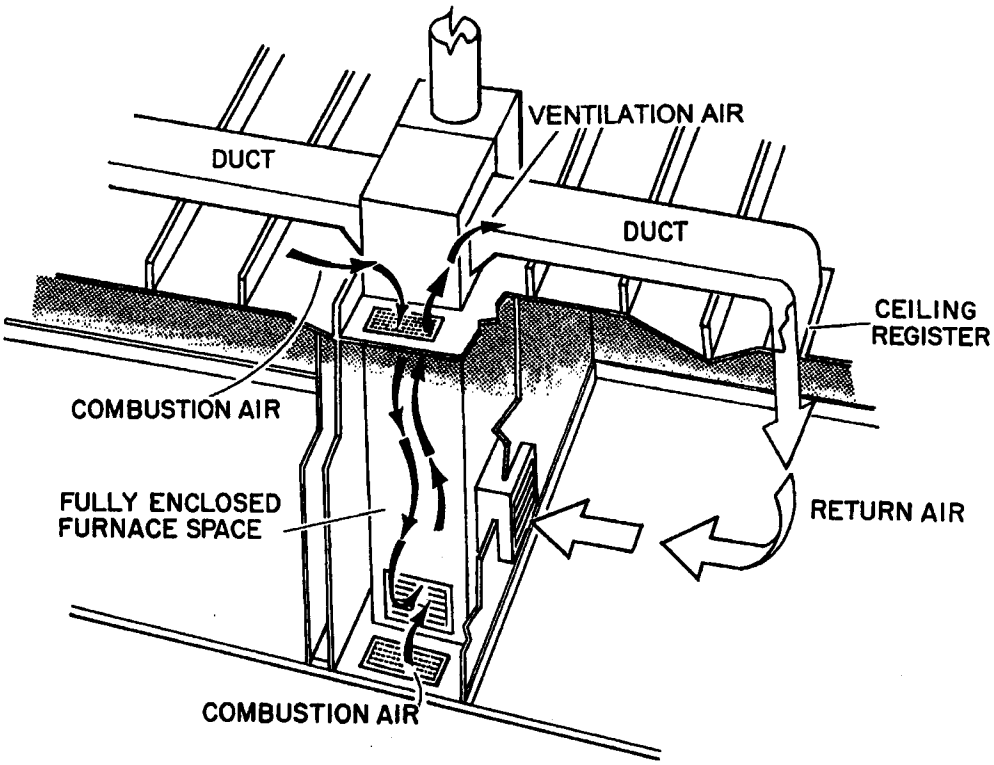

5. **COMBUSTION AND VENTILATION AIR (CVA) EVALUATION (continued)**
   - **When Appliances Draw Combustion Air from Outdoors**
     - **Combustion air may be obtained <u>from outdoors</u> by means of:**
       - **Permanent openings (undampered vents) of the required size directly to outdoors through enclosure floor, roof, or walls; <u>or</u>**
       - **Continuous vertical or horizontal ducts of the required cross-sectional area extending from the enclosure to outdoors.**
     - **Combustion air may be obtained <u>from under the floor</u>, provided:**
       - **Undampered venting is present in the skirting.**
       - **Cross-ventilation is present, with venting located on at least two different sides of the mobile home.**
       - **Skirting vents on each side provide at least 1.5 sq. ft. NFVA for each 25 linear feet of mobile home length.**
     - **Louvers, Grilles, and Screens**
       - **Blocking effects of louvers, grilles, and screens shall be considered when calculating NFVA of an opening (see Appendix A).**

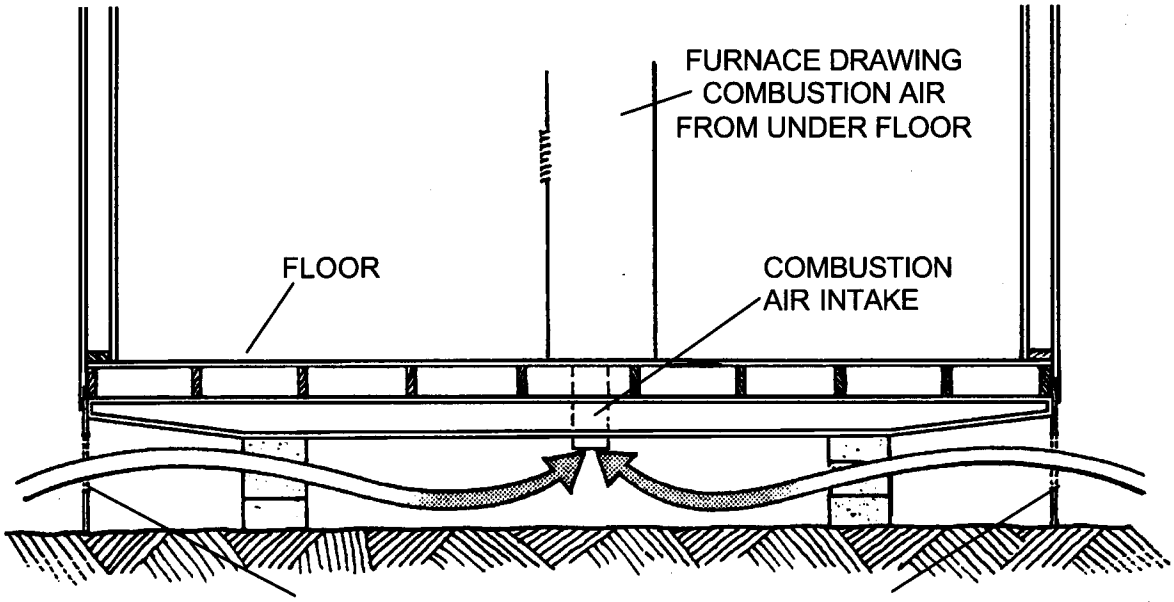

5. **COMBUSTION AND VENTILATION AIR (CVA) EVALUATION (continued)**

- **When Appliances Draw Combustion Air from <u>Indoors</u>**
  - **Unconfined Space:**
    - **A room/space that has a volume of at least 50 cu. ft. per 1,000 Btu/hr total input rating of the open combustion furnace and/or water heater in that room/space.**
    - **Combustion air <u>is</u> considered adequate.**
  - **Confined Space:**
    - **A room/space that has a volume of <u>less than</u> 50 cu. ft. per 1,000 Btu/hr total input of the open combustion furnace and/or water heater in that room/space.**
    - **Combustion air is <u>not</u> adequate, and**
    - **Proper vent openings to adjacent space(s) must be present.**
  - **Confined spaces outside the mobile home shall not be vented into the living space.**

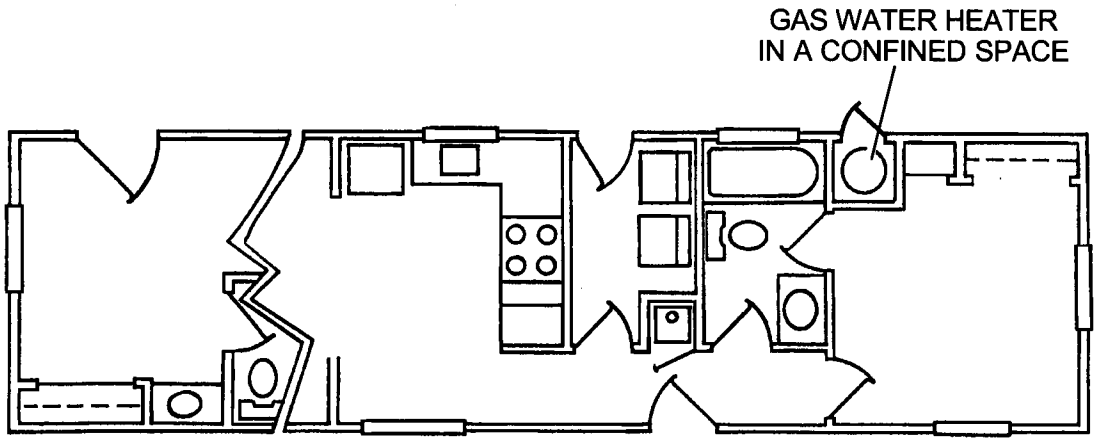

WATER HEATER ENCLOSURE VOLUME IS LESS THAN
50 CUBIC FEET PER 1,000 BTU/HR INPUT

5. **COMBUSTION AND VENTILATION AIR (CVA) EVALUATION (continued)**

- **Water Heater Combustion Air Venting.**
  - **An *upper* combustion air vent shall be present, which may consist of one of the following:**
    - **A double concentric vent pipe in the ceiling:**
      - **Appliance vent pipe surrounded by air space and a larger-diameter outer pipe.**
      - **NFVA is the cross-sectional area of the larger pipe minus the cross-sectional area of the smaller pipe.**
    - **An undampered vent (screen or grille) installed in the door or outer wall and located higher than the draft hood.**
  - **A *lower* combustion air vent shall be present, which may be an undampered vent (screen or grille) to the outdoors, located in:**
    - **The enclosure floor, <u>or</u>**
    - **The door or wall and located not more than 1' above the floor.**
  - **A continuous duct extending from the enclosure to the outdoors may be used to supply upper or lower combustion air venting.**

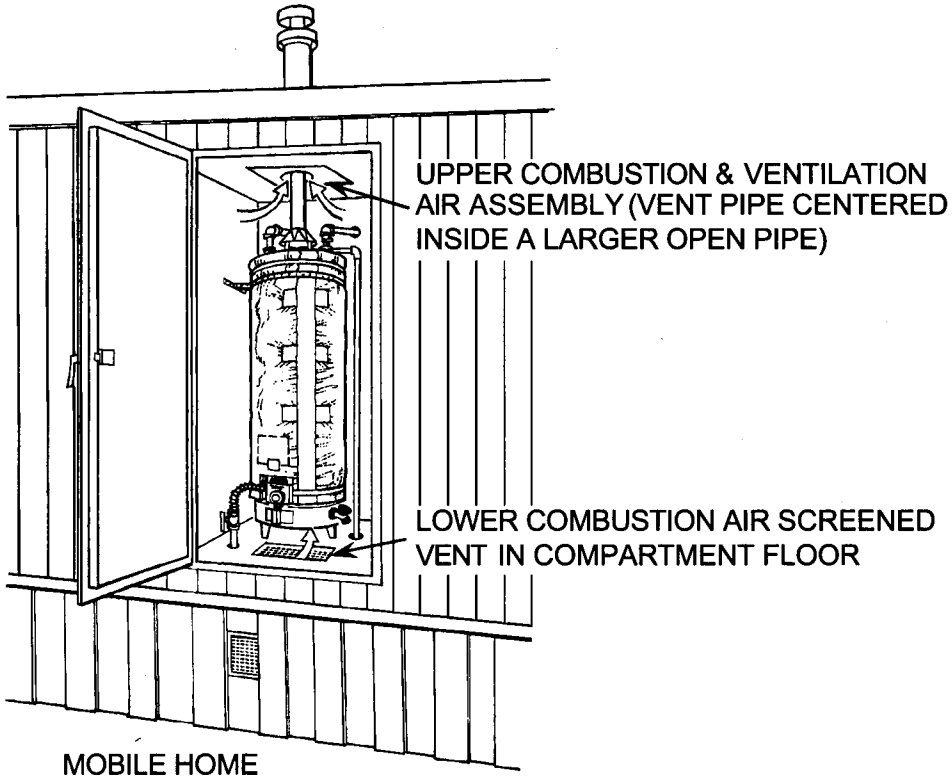

MOBILE HOME
WATER HEATER COMPARTMENT

6. FLUE AND VENT SYSTEM EXAMINATION

- **All gas flues and vents:**
  - **Shall terminate outdoors.**
  - **Shall not terminate underneath the mobile home.**
- **Flue and Vent Systems Terminating Near an Evaporative Cooler**
  - **A *water heater* flue/vent pipe shall not terminate within 3' of the cooler air intake.**
  - **A *furnace* flue/vent pipe shall not terminate within 3' of the cooler air intake unless:**
    - **All cooler discharge openings are equipped with a vent cover.**
    - **The client is informed of the non-conforming flue/vent and advised to keep cover(s) in place during the heating season.**

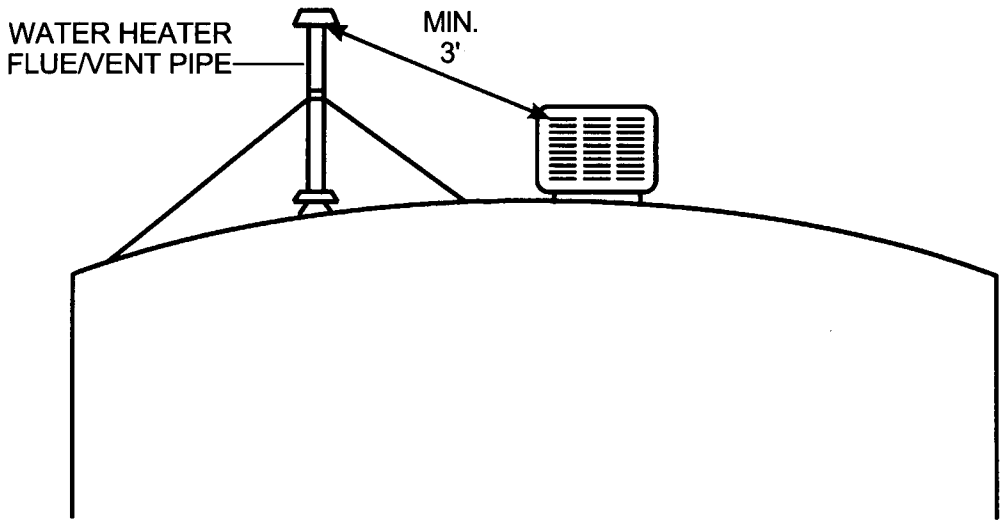

7. ADDITIONAL EXAMINATIONS OF NATURAL GAS APPLIANCES

- **Inoperable Gas Appliances**
  - **Inoperable natural gas appliances must be checked by a utility gas service technician (or designee), *unless* they are: (a) abandoned*, or (b) inaccessible*.**
- **Infiltration reduction measures will not be installed if any of the following conditions are present:**
  - **<u>Gas clothes dryer</u> located in the living space but <u>not</u> exhausted outdoors**.**
  - **<u>Return leak</u> present that can draw in combustion products from the FAU or other open combustion appliances (e.g., through a return leak).**
  - **<u>Unvented combustion space heater</u> (e.g., gas or kerosene unit) present in the living space.**
  - **<u>Open combustion furnace or water heater</u> present in, or drawing combustion air from, the living space.**
  - **Inoperable gas appliance.**

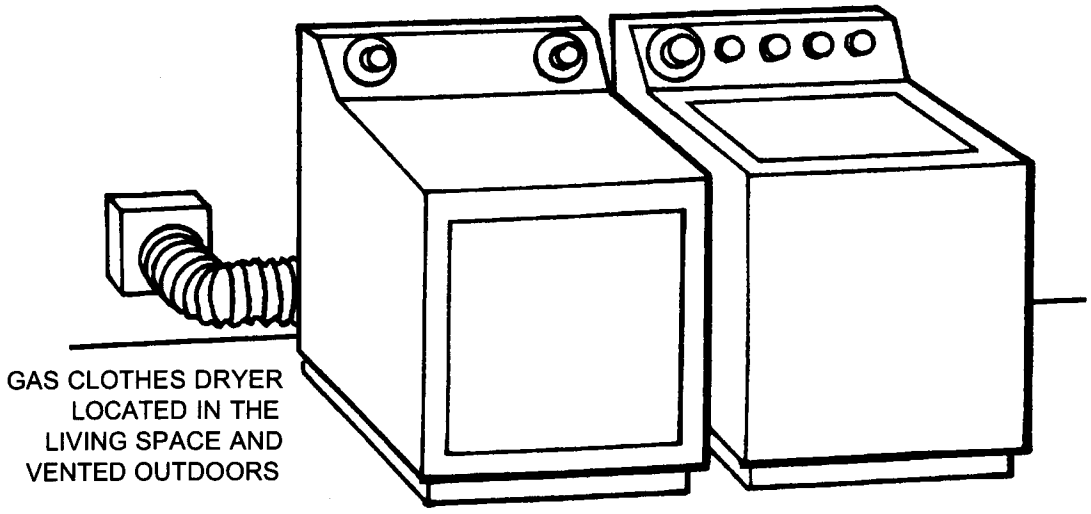

***See Definitions**

****Termination in the undercarriage space is acceptable when adequate cross-ventilation is present. Any dryer termination in an open combustion appliance enclosure/closet is <u>not</u> acceptable.**

7. ADDITIONAL EXAMINATIONS OF NATURAL GAS APPLIANCES (continued)

- **Cooking Area Ventilation for Gas Appliances**
  - **A functional vent to outdoors must be present above gas cooking appliances:**
    - **In the ceiling or a wall.**
    - **Within 10' of the appliances.**
  - **The vent may be either of the following:**
    - **An operable exhaust fan equipped with an automatic or manual damper.**
    - **A metal duct with a cross-sectional area of at least 12.5 sq. in., and minimum dimension of 2" (e.g., 2" x 6.25" rectangular duct or 4" round duct).**

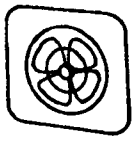

COOKING APPLIANCE VENTILATION PROVIDED BY A FUNCTIONAL EXHAUST FAN

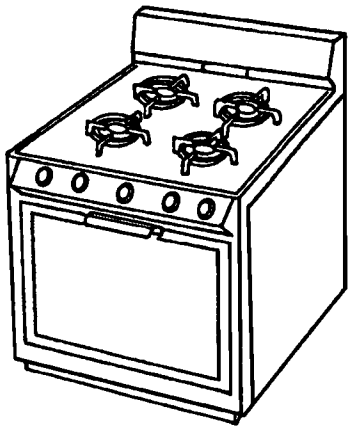

7. ADDITIONAL EXAMINATIONS OF NATURAL GAS APPLIANCES (continued)

- **Isolation of Return Air**
  - **The return air system shall not have leaks which:**
    - **Depressurize any open combustion appliance enclosure.**
    - **Draw in combustion air or combustion byproducts from any open combustion appliance (e.g., from the furnace itself or a nearby water heater).**
    - **Depressurize or draw air from a space where hazardous chemicals are stored or toxic fumes may be present.**
  - **The following conditions are <u>not</u> allowed:**
    - **An open combustion FAU draws non-ducted return air through an intake in the furnace cabinet.**
    - **A closed combustion FAU is located in an appliance enclosure adjacent to an open combustion water heater when:**
      - **The furnace enclosure is part of the return system, <u>and</u>**
      - **The two appliances are <u>not</u> separated by an airtight barrier.**
  - **Any condition which allows pollutants to be drawn into the FAU return shall be corrected when Infiltration Reduction Measures are installed.**

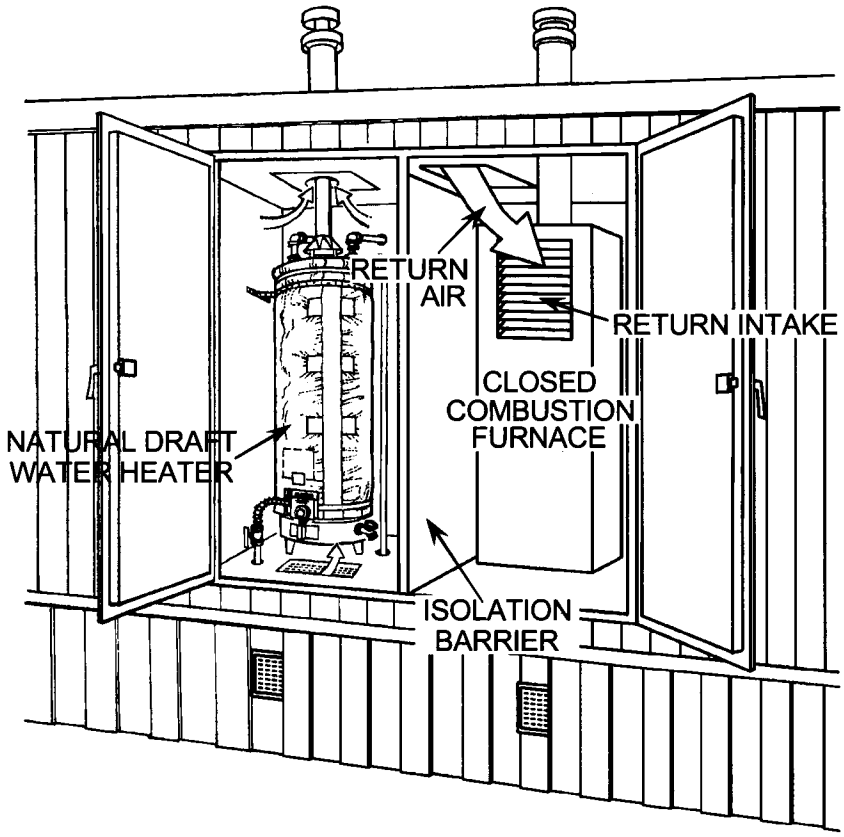

PART 3: WEATHERIZATION CREW VERIFICATIONS

8. PRELIMINARY VISUAL EVALUATIONS

- **A check shall be made for the following conditions, which preclude installation of infiltration measures unless repair is feasible:**
  - **Gas leaks and soldered gas connectors (Item 10)**
  - **Inadequate CVA (Item 11)**
  - **Inadequate clearance between water heater vent termination and evaporative cooler inlet (Item 12)**
  - **Other improper flue/vent terminations (Item 12)**
  - **Draft hood improper—misaligned, missing, or doubled (Item 12)**
  - **Flue/vent hazard, such as disconnection, hole/leak indoors, not extended outdoors (Item 12)**
  - **Flue/vent connection to a solid-fuel chimney (Item 12)**
  - **Inoperable or inaccessible gas appliance (Item 13)**
  - **Appliance components missing or damaged (Item 13)**
  - **Gas clothes dryer located in the living space but not exhausted outdoors (Item 13)**
  - **Improper gas-cooking area ventilation (Item 13)**
  - **Defective isolation of return air (Item 13)**
  - **Unvented combustion space heater in the living space (Item 13)**
  - **Open combustion space or water heating appliance located in the living space (Item 13)**
  - **When gas log is primary heat source, fireplace damper not blocked partially open (Item 20)**

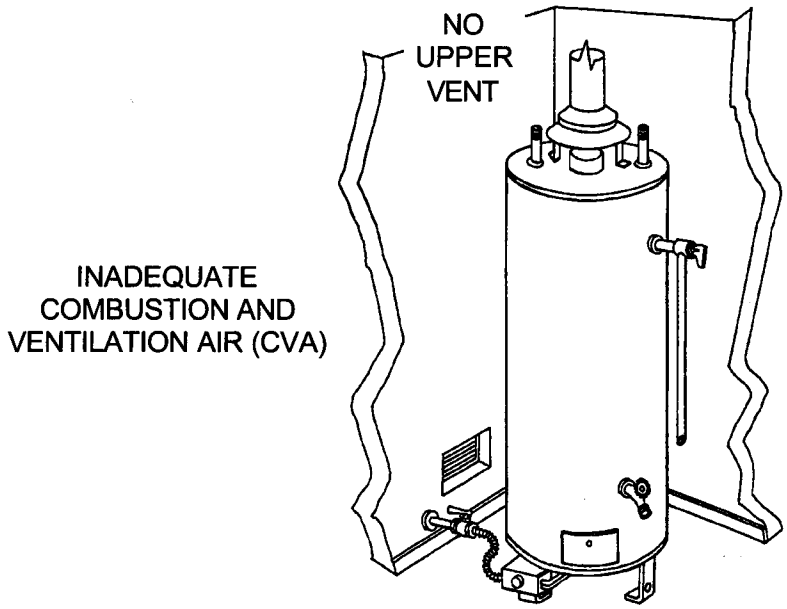

PART 4: POST-WEATHERIZATION NGAT PROCEDURES

9. POST-WEATHERIZATION NGAT

- **Post-Weatherization NGAT shall be performed, which shall include the following procedures:**
  - **CO Analyzer zeroed outdoors.**
  - **Room Ambient CO Test with gas appliances off.**
  - **Check for gas leaks.**
  - **CVA Evaluation.**
  - **Appliance-off visual inspection of appliances, components, and flue/vent systems.**
  - **Appliance Ambient CO Test with natural gas appliances operated individually.**
  - **Draft Test on natural draft space and water heating appliances.**
  - **Exhaust/flue CO Test and Draft Test on natural gas fireplace logs.**
  - **Appliance-on visual inspection of appliances.**
- **Appliances that Fail NGAT Protocol**
  - **If a Room Ambient or Appliance Ambient CO measurement equals or exceeds the action level of 10 ppm, unit(s) believed to be causing elevated CO reading shall be serviced/adjusted by a utility gas service technician (or designee) and, when applicable, repaired or replaced.**
  - **An appliance that has inadequate draft or is inoperable shall be serviced/adjusted by a utility gas service technician (or designee) and, when applicable, repaired or replaced .**
  - **All units repaired or replaced shall undergo post-repair/replacement testing per Item 23.**

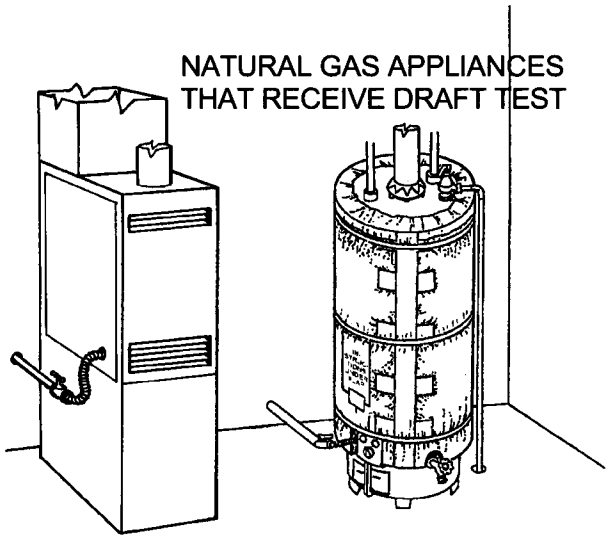

10. GAS LEAKS AND SOLDERED GAS CONNECTORS

- **Natural gas appliances shall be checked for gas leaks:**
  - **Prior to operating the appliance for testing.**
  - **With combustion appliances and exhaust fans/devices off.**
- **Appliances shall be checked for natural gas leaks using one or more of the following methods:**
  - **Olfactory (Sniff) Test performed above, but within 2' of, all valves and fittings.**
  - **Application of leak detection liquid to line valves and to fittings on valves, flexible gas connectors, and pipes.**
  - **Air sampling with electronic leak detection equipment near valves, fittings, flexible gas connectors, and pipes.**
- **When a gas leak is detected, inspection shall be conducted by a utility gas service technician (or designee).**
- **Leaks shall be repaired by a utility gas service technician (or designee) before appliances are operated for natural gas appliance tests.**
- **When faint gas odors are present, testing may occur; however, appliance shall be checked by a utility gas service technician (or designee).**
- **Soldered Gas Connectors**
  - **Old-style flexible gas connectors with soldered-on fittings shall be replaced with a new listed flexible gas connector.**

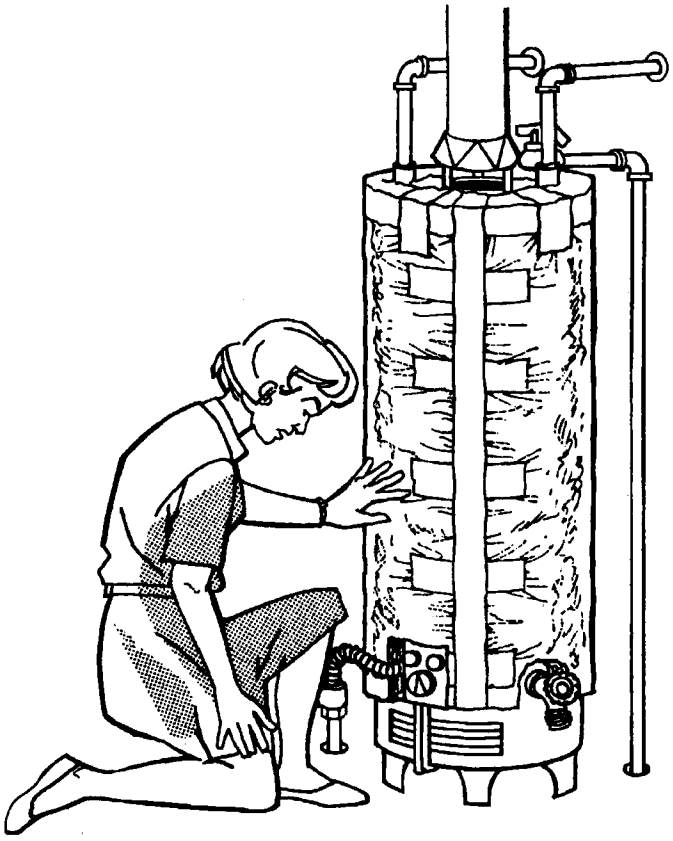

CHECKING FOR NATURAL GAS ODOR

11. COMBUSTION AND VENTILATION AIR (CVA) EVALUATION

- **CVA shall be evaluated for open combustion natural gas heating systems and water heaters (cooking appliances and clothes dryers are *excluded*).**
- **CVA shall comply with these guidelines and Appendix A, unless superseded by manufacturer's instructions or HCD requirements.**
- **Appliances Drawing *Outdoor* Air through Combustion-Air Openings or Ducts**
  - **An *upper* opening or duct shall be located within 12" of the enclosure ceiling, <u>and</u> a *lower* opening or duct shall be located within 12" of the floor.**
    <u>*Exception*</u>: Pre-existing upper openings and ducts are acceptable at any height above the draft hood.
  - **Combustion air openings and vertical ducts shall each provide 1 sq. in. net free venting area (NFVA) per 4,000 Btu/hr of input.**
  - **Horizontal ducts shall each provide 1 sq. in. NFVA per 2,000 Btu/hr of input.**
  - **Combustion air may also be obtained through a <u>single</u> <u>upper</u> vent or duct to outdoors under the following conditions:**
    - **Vent NFVA is at least: (a) 1 sq. in. per 3,000 Btu/hr input, and (b) not less than the sum of the cross-sectional areas of all vent connectors in the space.**
    - **Equipment has clearances of at least 1" sides and back, and 6" in front.**

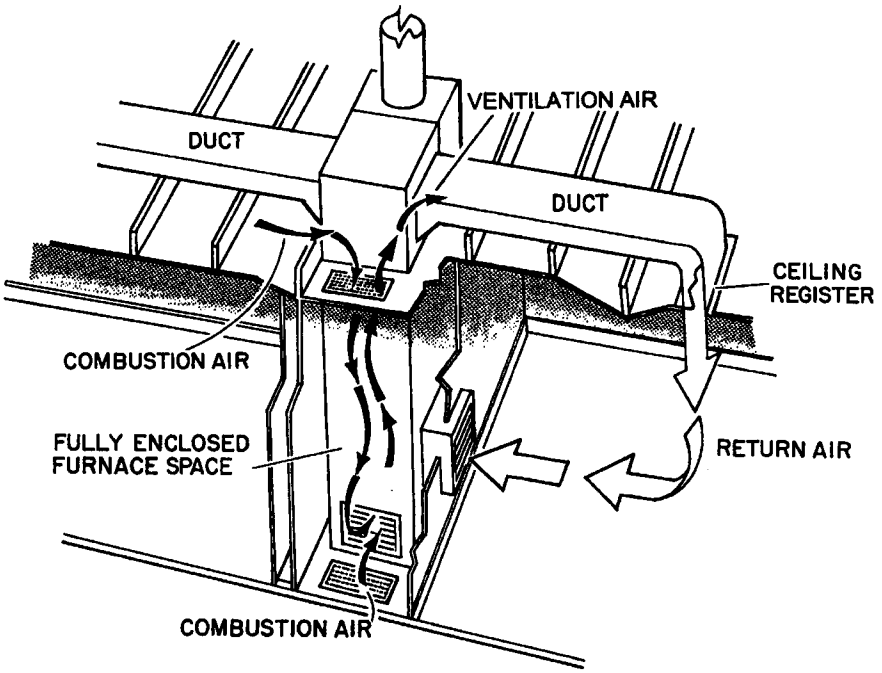

11. COMBUSTION AND VENTILATION AIR (CVA) EVALUATION (continued)

- When Appliance s Draw Combustion Air from Outdoors
  - Combustion air may be obtained from outdoors by means of:
    - Permanent openings (undampered vents) of the required size directly to outdoors through enclosure floor, roof, or walls; or
    - Continuous vertical or horizontal ducts of the required cross-sectional area extending from the enclosure to outdoors.
  - Combustion air may be obtained from under the floor, provided:
    - Undampered venting is present in the skirting.
    - Cross-ventilation is present, with venting located on at least two different sides of the mobile home.
    - Skirting vents on each side provide at least 1.5 sq. ft. NFVA for each 25 linear feet of mobile home length.
- Combustion-Air Ducts and Sleeves
  - Ducts and sleeves shall be a minimum of 26 gage galvanized steel or 24 gage aluminum, and ducts shall have a minimum cross-sectional dimension of 3".
- Louvers, Grilles, and Screens
  - Covering of 1/4" corrosion-resistant screen mesh is required on combustion air openings to outdoors.
  - Blocking effects of louvers, grilles, and screens shall be considered when calculating NFVA of an opening (see Appendix A).
- When Appliances Draw Combustion Air from Indoors
  - Unconfined Space:
    - A room/space that has a volume of at least 50 cu. ft. per 1,000 Btu/hr total input rating of the open combustion furnace and/or water heater in that room/space.
    - Combustion air is considered adequate.

SOURCES OF COMBUSTION AIR	
OUTDOORS	**UNDER FLOOR**
• Permanent openings with undampered vents or continuous ducts (vertical or horizontal). • Vent directly to outdoors. • 1/4" screen mesh on all combustion-air openings.	• Free flow of air. • Unobstructed openings to outdoors on each side that provide at least 1.5 sq. ft. NFVA for each 25 linear feet of the mobile home length.

11. **COMBUSTION AND VENTILATION AIR (CVA) EVALUATION (continued)**
    - **When Appliances Draw Combustion Air from Indoors (continued)**
      - **Confined Space:**
        - **A room/space that has a volume of less than 50 cu. ft. per 1,000 Btu/hr total input of the open combustion furnace and/or water heater in that room/space.**
        - **Combustion air is not adequate.**
        - **Proper vent openings to adjacent space(s) must be present.**
      - **Confined spaces outside the mobile home shall not be vented into the living space.**

12. **FLUE AND VENT SYSTEM EXAMINATION**
    - **Flue and vent systems shall be free of:**
      - **Draft hood defects:**
        - **Improperly installed or positioned.**
        - **Multiple (stacked) draft hoods on a single appliance.**
        - **Missing (no draft hood at all).**
      - **Disconnections or unsafe joints (e.g., loose, unsecured, etc.).**
      - **Holes or other hazardous conditions requiring repair.**
      - **Connection to a solid-fuel appliance chimney.**
    - **All gas flues and vents:**
      - **Shall terminate outdoors.**
      - **Shall not terminate underneath the mobile home (reference HUD Code: 24 CFR, Chapter XX, Part 3280, Subpart H).**
    - **Flue and Vent Systems Terminating Near an Evaporative Cooler**
      - **A *water heater* flue/vent pipe shall not terminate within 3' of the cooler air intake.**
      - **A *furnace* flue/vent pipe shall not terminate within 3' of the cooler air intake unless:**
        - **All cooler discharge openings are equipped with a vent cover.**
        - **The client is informed of the non-conforming flue/vent and advised to keep cover(s) in place during the heating season.**

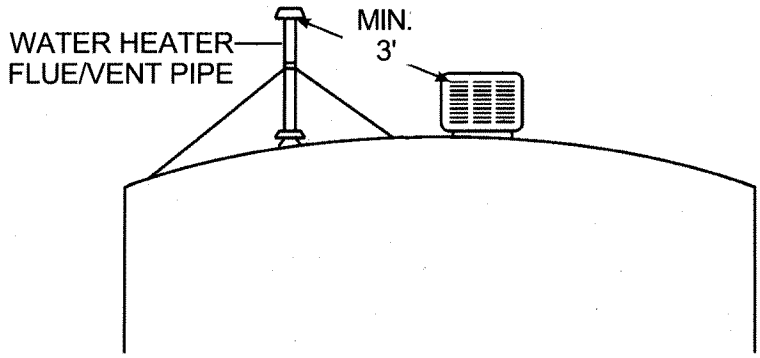

13. VISUAL APPLIANCE CHECKS

- **Inoperable Appliances**
  - **Inoperable natural gas appliances must be checked by a utility gas service technician (or designee), *unless* they are: (a) abandoned*, or (b) inaccessible*.**
- **The following conditions are <u>not</u> acceptable when Infiltration Reduction Measures are installed:**
  - **<u>Gas clothes dryer</u> located in the living space but <u>not</u> exhausted outdoors**.**
  - **<u>Return leak</u> present that can draw in combustion products from the FAU or other open combustion appliances.**
  - **<u>Unvented combustion space heater</u> (e.g., gas or kerosene unit) present in the living space.**
  - **<u>Open combustion furnace or water heater</u> present in, or drawing combustion air from, the living space.**
  - **Inoperable gas appliance.**

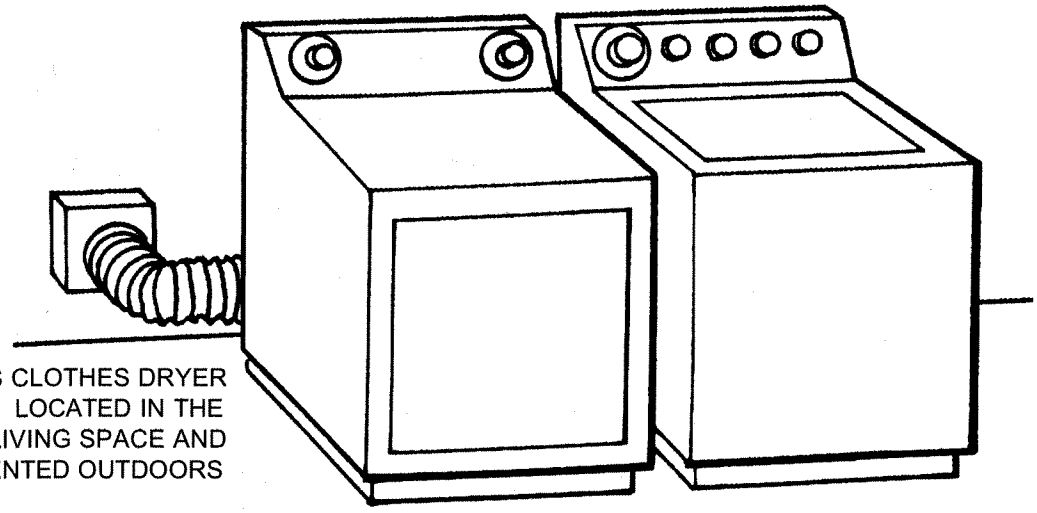

***See Definitions**

****Termination in the undercarriage space is acceptable when adequate cross-ventilation is present. Any dryer termination in an open combustion appliance enclosure/closet is <u>not</u> acceptable.**

13. **VISUAL APPLIANCE CHECKS (continued)**
   - **Cooking Area Ventilation for Gas Appliances**
     - **A functional vent to outdoors must be present above gas cooking appliances:**
       - **In the ceiling or a wall.**
       - **Within 10' of the appliances.**
     - **The vent may be either of the following:**
       - **An operable exhaust fan equipped with an automatic or manual damper.**
       - **A metal duct with a cross-sectional area of at least 12.5 sq. in., and minimum dimension of 2" (e.g., 2" x 6.25" rectangular duct or 4" round duct).**

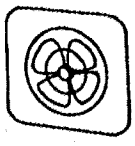

COOKING APPLIANCE VENTILATION PROVIDED BY A FUNCTIONAL EXHAUST FAN

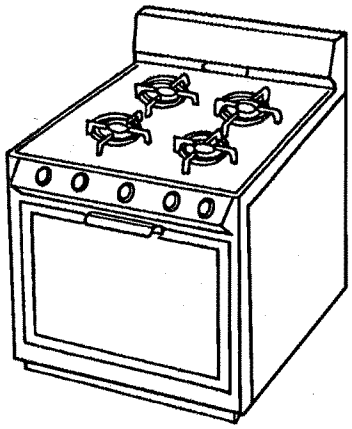

13. **VISUAL APPLIANCE CHECKS (continued)**

- **Appliance Components**
  - **The following appliance components shall be present:**
    - **Appliance door(s).**
    - **Combustion chamber access door(s).**
  - **Water heater shall have at least one access cover or roll-out shield.**
  - **Roll-out shield required on furnace when the unit was manufactured with a roll-out shield.**
- **Carbon and Rust**
  - **The top of the burner(s), the heat exchanger, draft hood and flue/vent pipe shall be examined for excessive amounts of carbon or rust.**

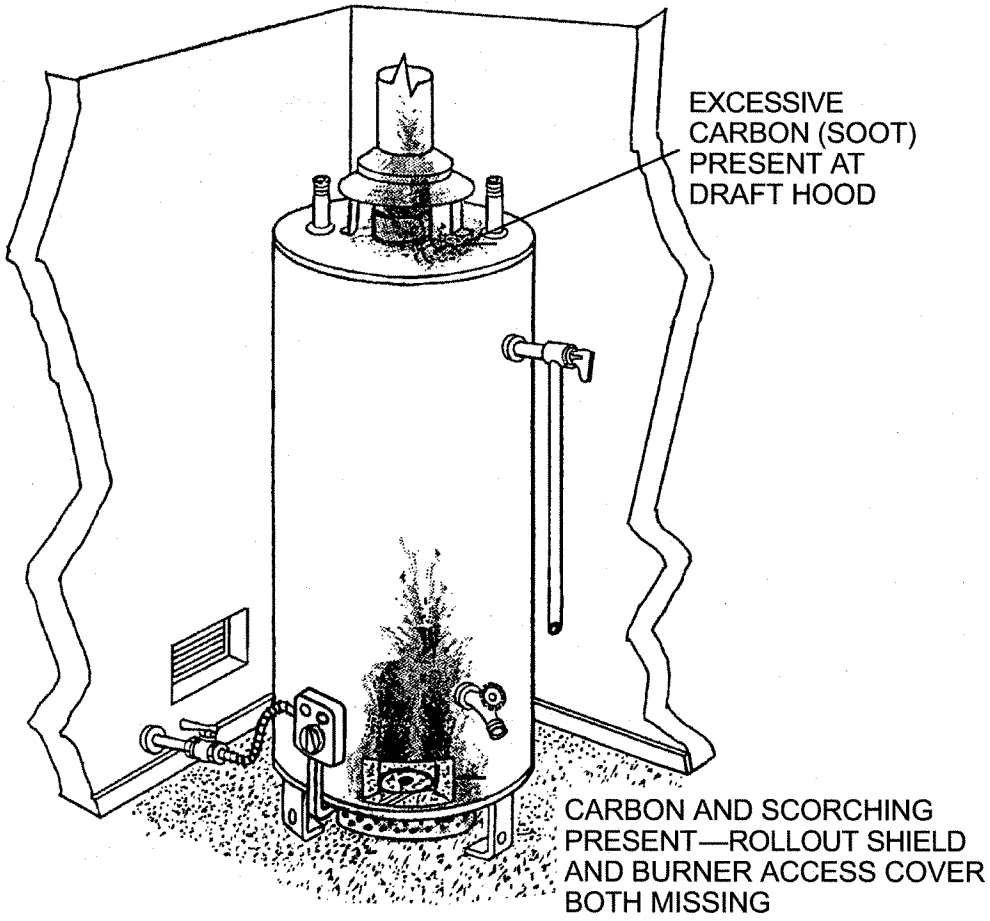

13. **VISUAL APPLIANCE CHECKS (continued)**

- **Isolation of Return Air**
  - **The return air system shall not have leaks which:**
    - **Depressurize any open combustion appliance enclosure.**
    - **Draw in combustion air or combustion byproducts from any open combustion appliance (e.g., from the furnace itself or a nearby water heater).**
    - **Depressurize or draw air from a space where hazardous chemicals are stored or toxic fumes may be present.**
  - **The following conditions are <u>not</u> allowed:**
    - **An open combustion FAU draws non-ducted return air through an intake in the furnace cabinet.**
    - **A closed combustion FAU is located in an appliance enclosure adjacent to an open combustion water heater when:**
      - **The furnace enclosure is part of the return system, <u>and</u>**
      - **The two appliances are <u>not</u> separated by an airtight barrier.**
  - **Any condition which allows pollutants to be drawn into the FAU return shall be corrected.**

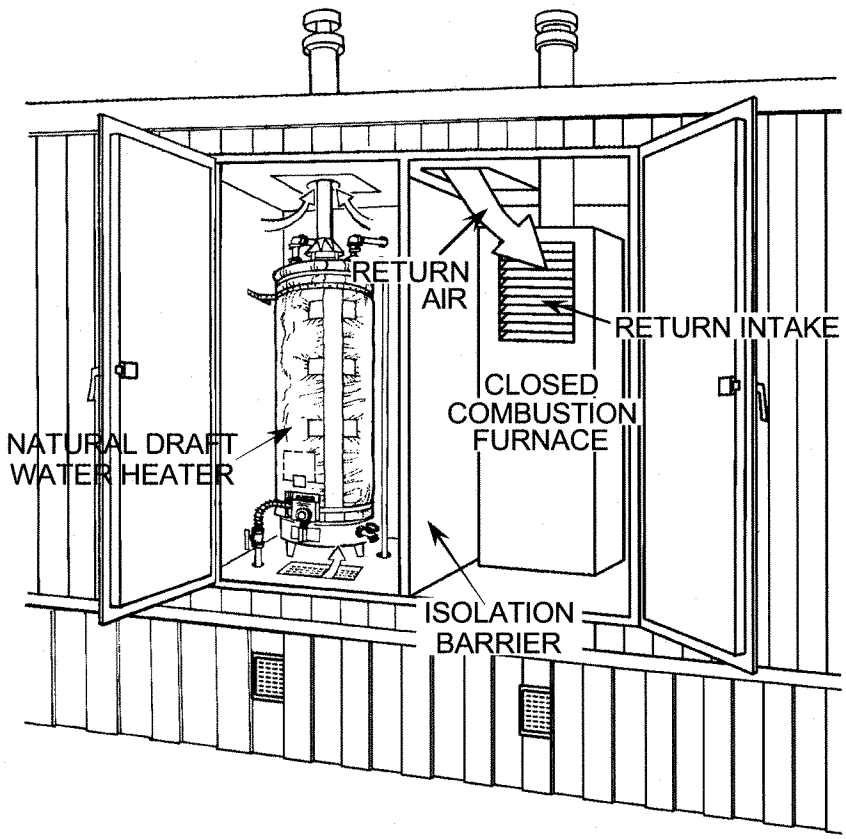

14. **TEST CONDITIONS FOR ROOM AMBIENT CO TEST**
   - **Test shall be performed *prior* to operating any appliances.**
   - **Test Conditions**
     - **All gas appliances in the living space turned off (e.g., at the thermostat).**
       ***Exception*: Water heater pilot may be operating, but main burner shall not be operating.**
     - **Air handler and all exhaust fans and air-exhausting devices turned off.**
     - **Exterior doors and windows closed.**
     - **Interior doors:**
       - **All interior room doors open.**
       - **Appliance enclosure doors closed.**
     - **Fireplace damper closed when feasible (no fire or hot coals).**
     - **If an interior cooler cover is available, it shall be in place.**

15. **CO ANALYZER "ZEROING"**
   - **Just prior to performing Room Ambient CO Test, the analyzer shall be adjusted outdoors to read zero ppm CO.**
   - **CO analyzer shall be protected from outdoor sources of CO and from wind bearing pollutants.**
   - **Analyzer shall remain on during entire ambient test sequence when possible.**
   - **If turned off during ambient testing, zeroing process shall be repeated before resuming tests.**

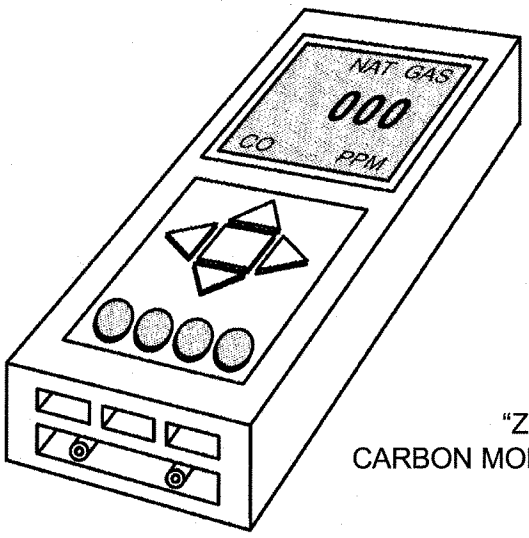

"ZEROED"
CARBON MONOXIDE ANALYZER

16. CONDUCTING ROOM AMBIENT CO TEST

- **Room Ambient CO Test shall be conducted immediately after zeroing the CO analyzer:**
  - **In an open area in the main body of the living space (e.g., in the center of the living room or living/dining combination area).**
  - **10' away from combustion appliances and supply registers (less than 10' away acceptable in smaller rooms).**
  - **6' above the floor.**
- **If Room Ambient CO Test measurement is 10 ppm or greater:**
  - **The living space shall be ventilated and the test repeated when a condition such as the following exists:**
    - **Heavy smokers are present, or**
    - **Wood-burning or unvented heating/cooking appliances were operating within the preceding half hour.**
  - **Appliance Ambient CO Tests shall be conducted even if CO is 10 ppm or greater after ventilation and repeat of the Room Ambient CO Test.**

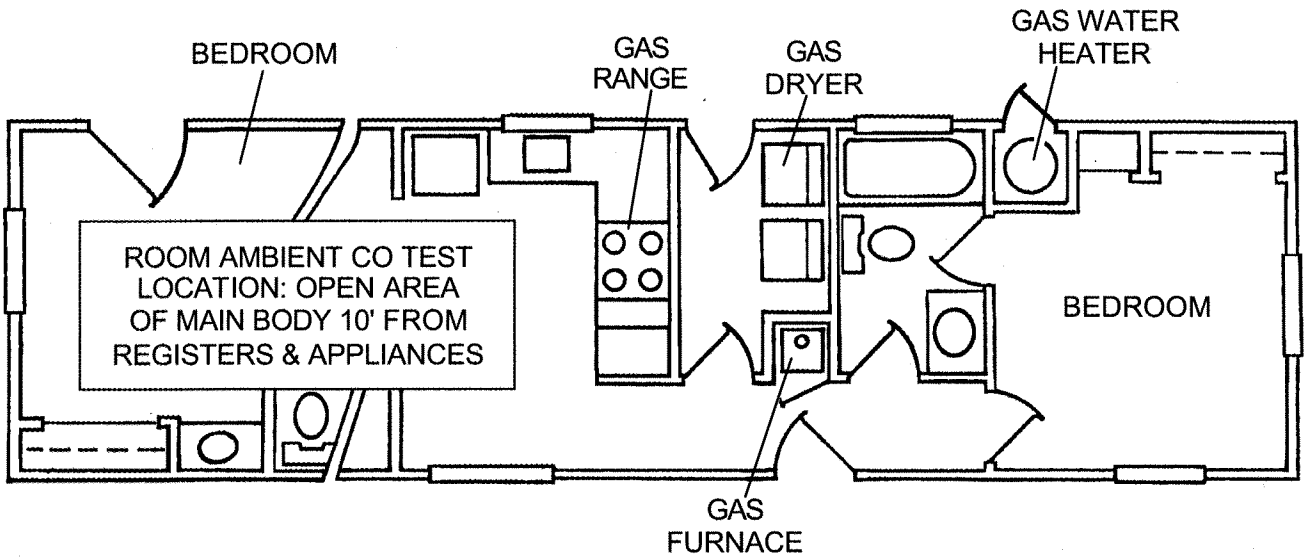

17. TEST CONDITIONS FOR APPLIANCE-ON CO AND DRAFT TESTS

- **The following test conditions shall be established for Appliance Ambient CO Tests and Draft Tests.**
- **Door/Window Positions for Tests in the Living Space**
  - **The following shall be closed:**
    - **All exterior doors and windows.**
    - **Doors to rooms containing a supply register when a central return is outside the room.**
    - **Appliance enclosure doors (except during tests).**
  - **The following shall be open:**
    - **Doors to all other living areas and rooms.**
    - **Door to utility room with clothes dryer exhausted outdoors. Exception: When a natural draft appliance in that room is tested, the door shall be closed.**

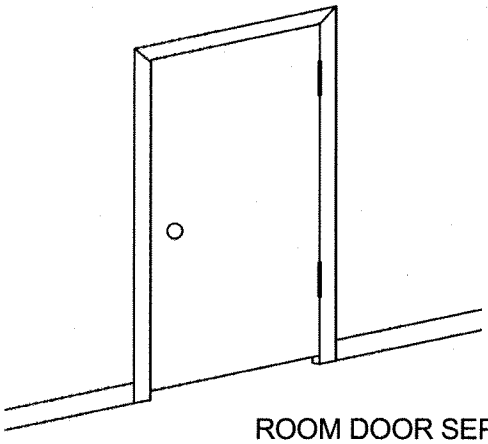

ROOM DOOR SEPARATING
SUPPLY REGISTERS
FROM A CENTRAL RETURN

17. TEST CONDITIONS FOR APPLIANCE-ON CO AND DRAFT TESTS (continued)

- The following must be operating during tests:
  - FAU air handler.
  - All devices that exhaust air from the space containing an appliance being tested:
    - Include kitchen exhaust fans, bathroom and utility room fans, clothes dryer, central vacuum system, and manually-controlled attic ventilators.
    - Exclude whole house fan.
- FAU air filter(s) must be clean or shall be removed prior to testing.
- Clothes dryer lint screen shall be clean.
- Supply registers shall be open.
- If an interior cooler cover is available, it shall be in place.

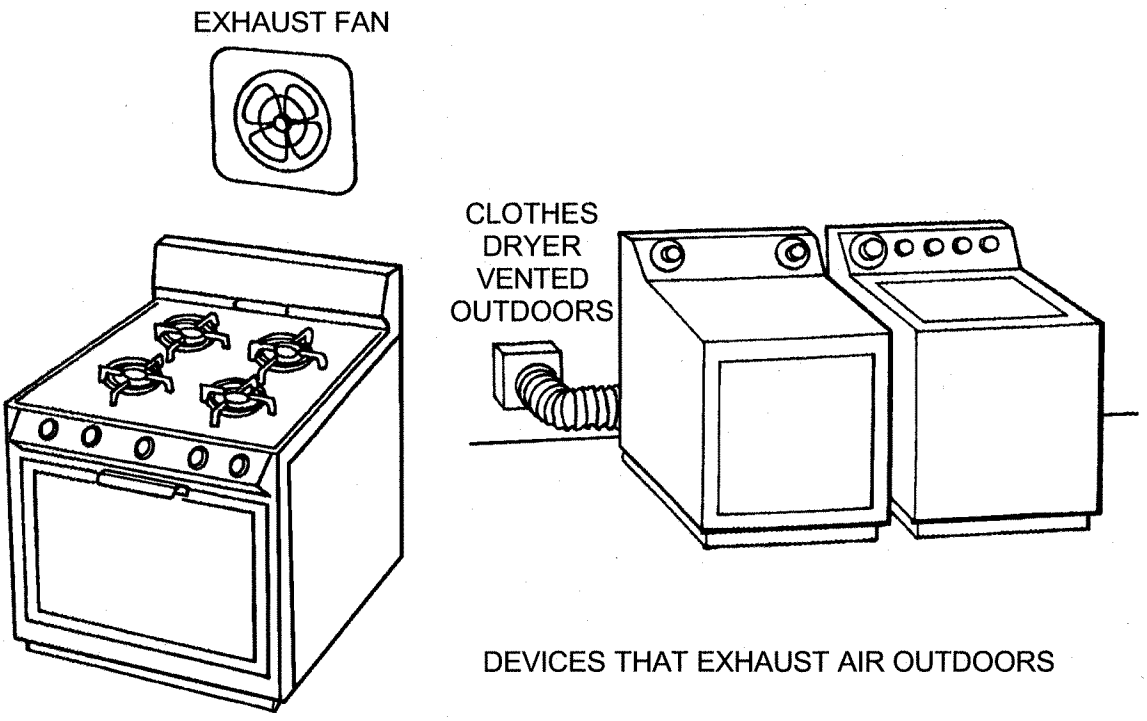

DEVICES THAT EXHAUST AIR OUTDOORS

18. TEST PROCEDURES FOR APPLIANCE AMBIENT CO TEST

- Test conditions shall be established as prescribed in Item 17.
- Natural Gas Heating Appliances
  - Heating appliance(s) shall be operated for a minimum of 5 minutes.
  - All other gas appliances shall remain off.
    Exception: Water heater pilot may be operating, but main burner shall not be operating.
  - CO shall be measured in the following locations:
    - Ducted units: In the supply register nearest the furnace.
    - Heaters without ducts (e.g., direct vent furnaces): In the atmosphere directly above the top of the unit.
  - The heating system shall be checked by a utility gas service technician (or designee) if Appliance Ambient CO Test CO ppm is:
    - Higher than Room Ambient CO Test CO ppm, or
    - Above 9 ppm.
- Natural Gas Water Heater
  - Storage water heater shall be operated for a minimum of 5 minutes.
  - Tankless water heaters shall be operated for a minimum of 1 minute.
  - All other gas appliances shall remain off.
  - CO shall be measured in the atmosphere directly above the top of the water heater (and draft hood or inducer, if applicable).
  - The water heater shall be checked by a utility gas service technician (or designee) if Appliance Ambient CO Test CO exceeds 9 ppm.
- Natural Gas Log
  - An exhaust/flue CO test shall be conducted per Item 20.
- Natural Gas Clothes Dryer
  - No CO test required.

APPLIANCE AMBIENT CO TEST CO ANALYZER PROBE LOCATIONS FOR HEATING APPLIANCES AND WATER HEATERS
• DUCTED UNITS: INSIDE SUPPLY REGISTER NEAREST THE FAU WITH TEST PROBE DIRECTED INTO THE AIR FLOW.
• NON-DUCTED HEATERS: IN THE ATMOSPHERE ABOVE THE UNIT.
• WATER HEATERS: IN THE ATMOSPHERE ABOVE THE UNIT AND DRAFT HOOD.

18. TEST PROCEDURES FOR APPLIANCE AMBIENT CO TEST (continued)

- **Natural Gas Kitchen Appliances**
  - **All other gas appliances shall remain off.**
    ***Exception*: Water heater pilot may be operating, but main burner shall not be operating.**
  - **Cooktop:**
    - **With ovens and broilers off, all cooktop burners, and griddle if present, shall be operated on highest setting for one minute.**
    - **CO shall be measured in the center of the kitchen.**
  - **Oven and Broiler Units:**
    - **With cooktop off, each oven shall be operated on highest setting (i.e., "Broil" when applicable) for a minimum or 5 minutes (with separate broiler burner off).**
    - **When a separate broiler burner is present, it shall be operated on highest setting for 5 minutes (with oven burner off).**
    - **CO shall be measured in the center of the kitchen for oven and separate broiler, when present.**
  - **CO Action Level**
    - **The appliance shall be checked by a utility gas service technician (or designee) if Appliance Ambient CO Test CO exceeds 9 ppm.**

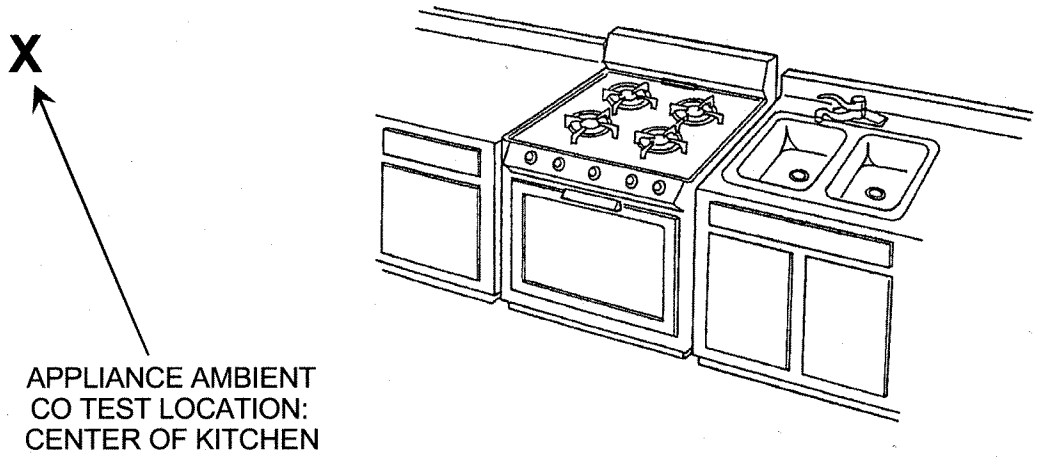

19. DRAFT EXAMINATION

- **Natural Gas Open Combustion Heating Systems and Water Heaters**
  - **Draft tests shall be performed after a minimum of 5 minutes of appliance operation.**
  - **Visual/Smoke Draft Test shall be performed on Natural Draft appliances.**
    - **Smoke shall be applied along the entire draft hood opening.**
    - **Draft is adequate <u>only if</u> smoke is drawn into the draft hood along the entire draft hood opening.**
- **Gas Logs**
  - **Visual/Smoke Draft Test shall be performed as prescribed in Item 20.**
- **All Units**
  - **Corrective action is required when Draft is <u>not</u> adequate.**

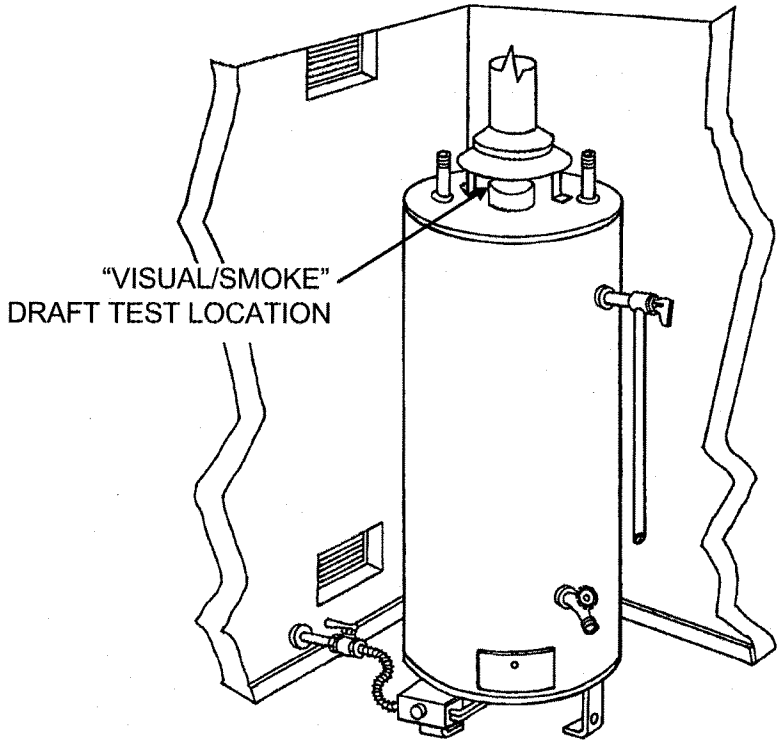

20. CO AND DRAFT TESTING FOR NATURAL GAS LOGS

- **When gas log is the *primary* heat source:**
  - **Damper must be blocked partially open (e.g., with a damper clip).**
  - **Opening shall be sufficient to prevent spillage of combustion products into the room.**
- **Fireplace glass doors shall be open during tests.**
- **Exhaust/Flue CO Test**
  - **Gas burner shall be operated for a minimum of 5 minutes before checking CO.**
  - **CO shall be sampled just inside the fireplace opening at least 12" above the flame.**
  - **If CO exceeds action level after 5 minutes, warm up time shall be increased (up to 30 minutes) and unit shall be retested.**
  - **Service by a utility gas service technician (or designee) is required if CO exceeds action level.**
- **CO Action Level***
  - **25 ppm As Measured.**
  - **400 ppm Air Free.**
- **Visual/Smoke Draft Test**
  - **Smoke shall be applied along the top of the fireplace opening.**
  - **Draft is adequate only if smoke is drawn inward along the entire fireplace opening.**

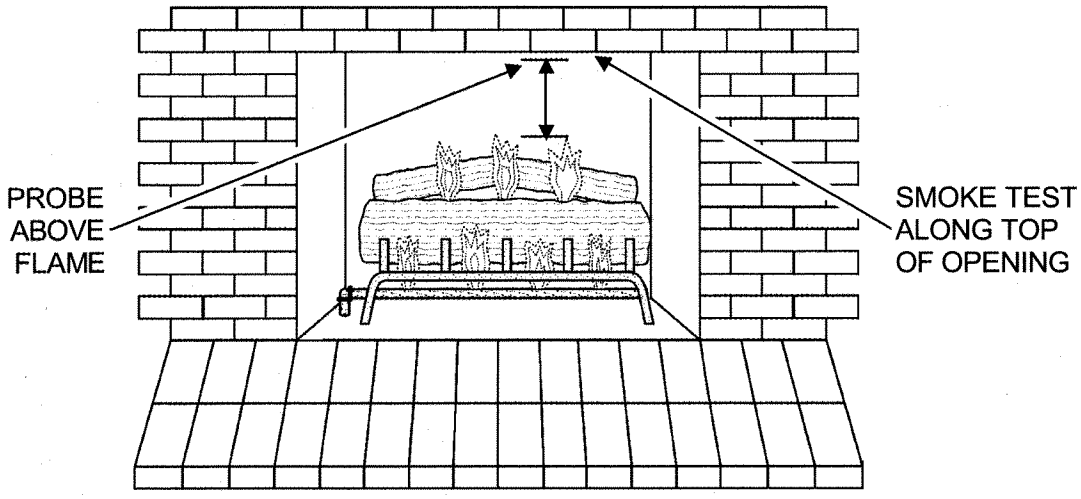

21. ADDITIONAL APPLIANCE EXAMINATIONS

- **Burner Performance**
  - **When the burner(s) ignite, checks shall be made for:**
    - **Delayed ignition.**
    - **Excessive roll-out.**
  - **Burner(s) shall be examined for flame abnormalities, including:**
    - **Large yellow flame (more than 50% yellow).**
    - **Soft lazy flame or smothering flame.**
- **Heat Exchanger Examination on Natural Gas Forced Air Heating Systems**
  - **Each accessible heat exchanger shall be rechecked for cracks with a mirror and strong light.**
  - **The unit shall be further examined/serviced by a utility gas service technician (or designee) if any of the following conditions is present:**
    - **Flame interference caused by the air handler in an FAU.**
    - **A visually-detected crack.**
    - **Other evidence of a defective heat exchanger.**
  - **If a defect exists, the condition shall be corrected by a utility gas service technician (or designee), or designated contractor licensed to repair HVAC appliances.**

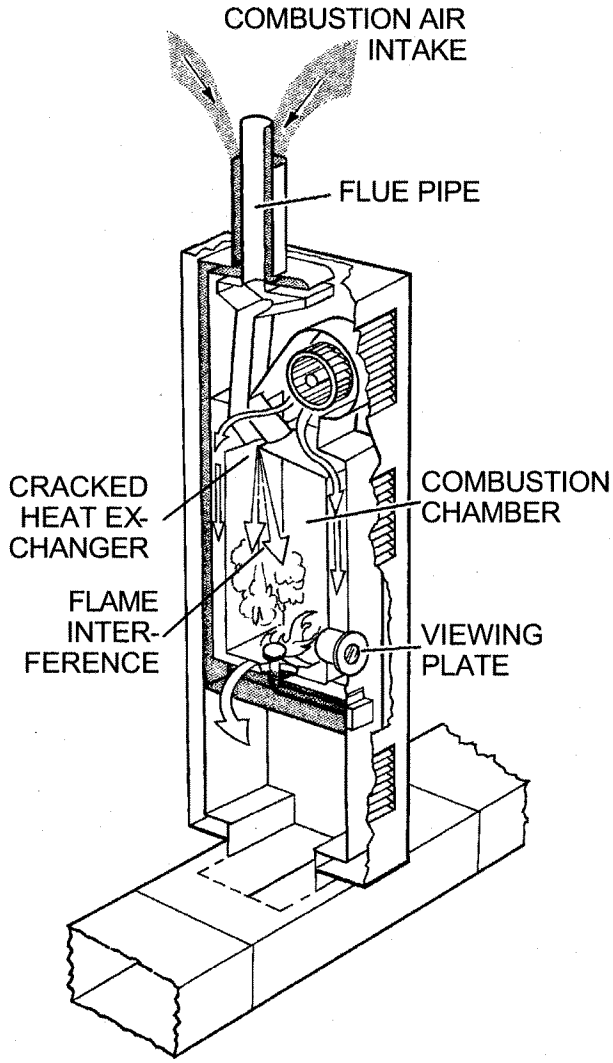

22. FLUE AND VENT SYSTEM REPAIR

- **Draft Hoods**
  - **The following conditions must be corrected:**
    - **Improperly installed or positioned draft hood.**
    - **Multiple (stacked) draft hoods on a single appliance.**
    - **No draft hood present where one is required.**
- **Repairing Flue and Vent Systems**
  - **New components shall conform to applicable codes.**
  - **All single-wall flue and vent pipe joints and connections shall be secured with 3 sheet metal screws (spaced as evenly as possible) where:**
    - **New components are installed.**
    - **Existing connections are loose and unsafe.**
  - **Double-wall Class B and BW flue and vent pipes shall <u>not</u> be drilled or have screws installed <u>if</u> doing so is prohibited by the pipe manufacturer or the jurisdiction.**

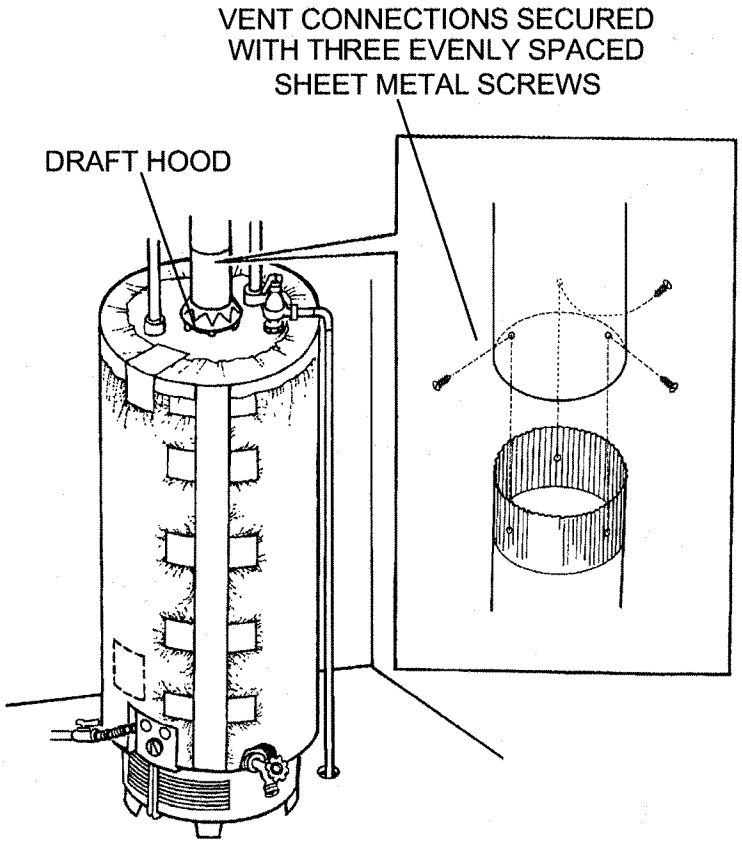

PART 5: POST-REPAIR/REPLACEMENT CHECKS

23. QUALITY ASSURANCE TESTING

- **Natural gas appliances that have been repaired or replaced shall be checked for proper operation, which includes:**
  - **No gas leaks (Item 25)**
  - **Adequate Draft (Item 26).**
  - **Acceptable level of Carbon Monoxide (Item 27).**
- **Problems identified during post-repair/replacement checks must be corrected.**

24. TEST CONDITIONS FOR POST-REPAIR/REPLACEMENT CO AND DRAFT TESTING

- **Door/Window Positions for Tests in the Living Space**
  - **The following shall be closed:**
    - **All exterior doors and windows.**
    - **Doors to rooms containing a supply register when a central return is outside the room.**
    - **Appliance enclosure doors (except during tests).**
  - **The following shall be open:**
    - **Doors to all other living areas and rooms.**
    - **Door to utility room with clothes dryer exhausted outdoors. *Exception:* When a natural draft appliance in that room is tested, the door shall be closed.**

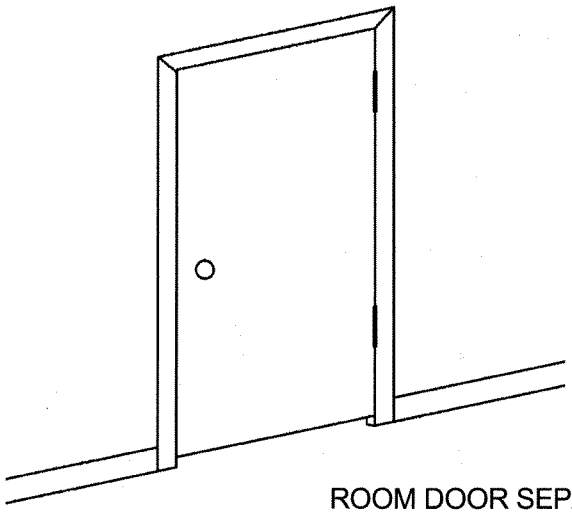

ROOM DOOR SEPARATING
SUPPLY REGISTERS
FROM A CENTRAL RETURN

24. TEST CONDITIONS FOR POST-REPAIR/REPLACEMENT CO AND DRAFT TESTING (continued)

- **The following <u>must</u> be operating during tests:**
  - **FAU air handler.**
  - **All devices that exhaust air from the space containing an appliance being tested (exclude whole house fan).**
- **FAU air filter(s) must be clean or shall be removed prior to testing.**
- **Supply registers shall be open.**
  - ***<u>Exception</u>:* Supply register(s) shall be closed when located in a utility room containing a natural draft appliance.**
- **If an interior cooler cover is available, it shall be in place.**

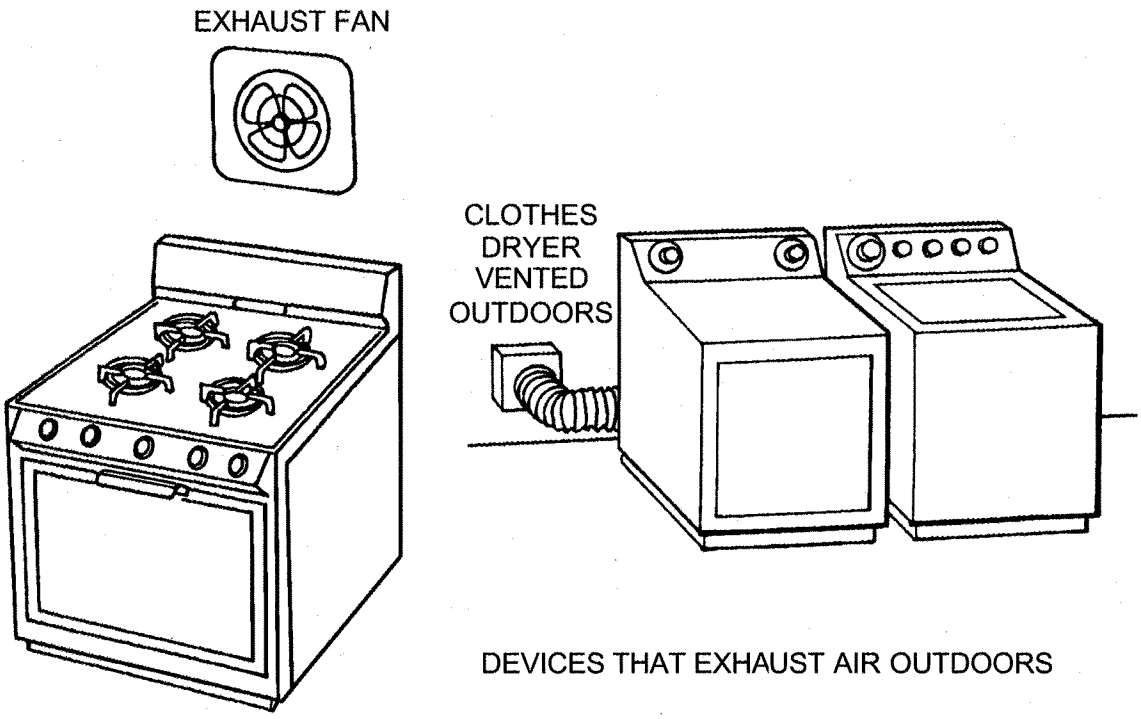

DEVICES THAT EXHAUST AIR OUTDOORS

25. GAS LEAKS

- **Appliances shall be checked for natural gas leaks using one or more of the following methods:**
  - **Olfactory (Sniff) Test performed above, but within 2' of, all valves and fittings.**
  - **Application of leak detection liquid to line valves and to fittings on valves, flexible gas connectors, and pipes.**
  - **Air sampling with electronic leak detection equipment near valves, fittings, flexible gas connectors, and pipes.**
- **Gas leaks shall be repaired.**

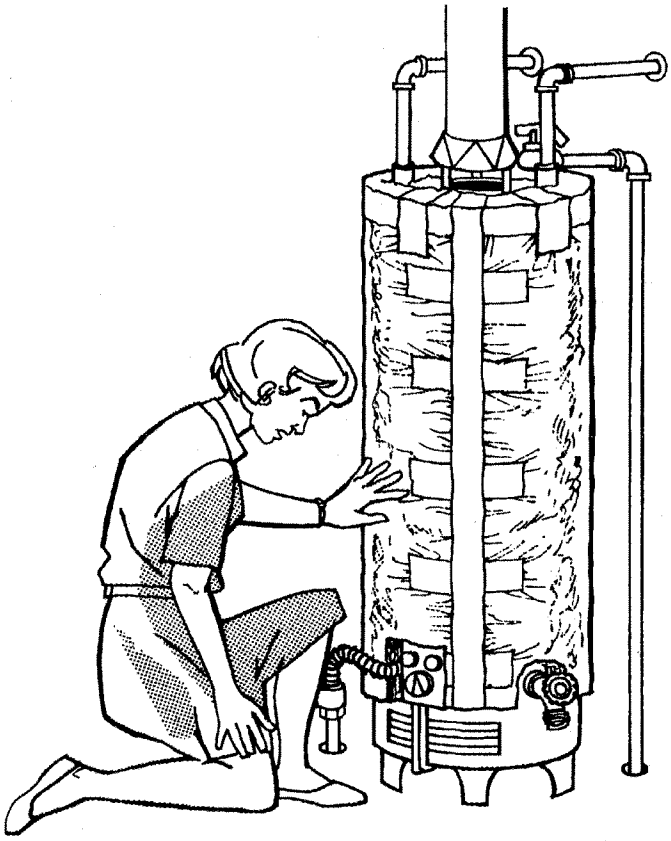

CHECKING FOR NATURAL GAS ODOR

26. DRAFT EXAMINATION

- **Natural Gas Open Combustion Heating Systems and Water Heaters**
  - **Test conditions prescribed in Item 24 shall first be established.**
  - **Draft tests shall be performed after a minimum of 5 minutes of appliance operation.**
  - **Visual/Smoke Draft Test shall be performed on Natural Draft appliances.**
    - **Smoke shall be applied along the entire draft hood opening.**
    - **Draft is adequate <u>only if</u> smoke is drawn into the draft hood along the entire draft hood opening.**

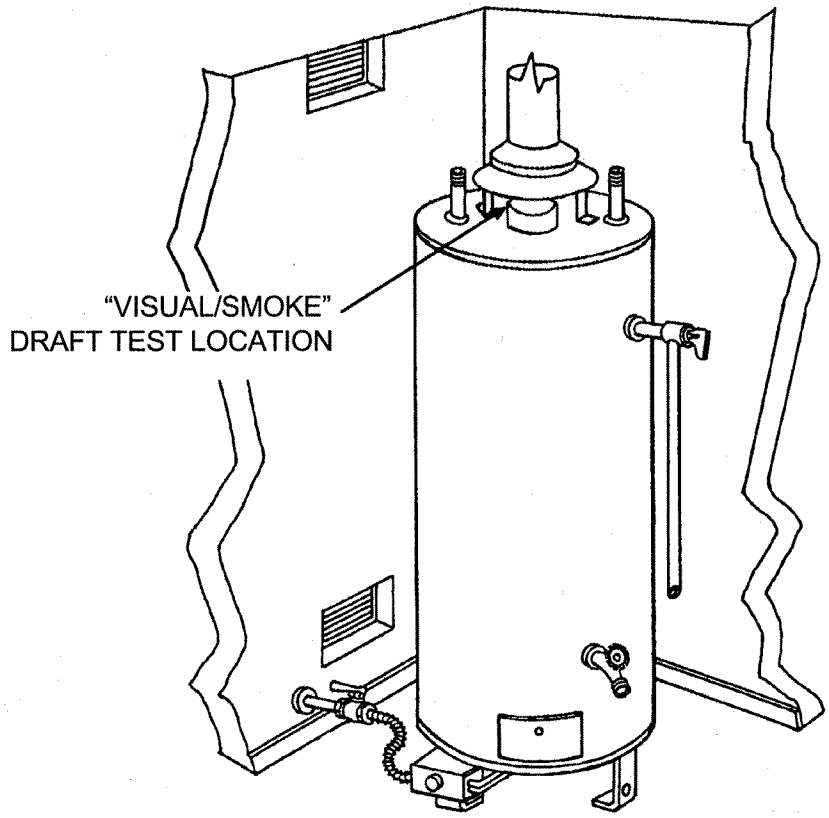

27. CO TESTING FOR NATURAL GAS SPACE AND WATER HEATING SYSTEMS

- **Appliance Ambient CO <u>or</u> Flue CO testing shall be performed.**
- **Appliance Ambient CO Tests**
  - **CO Tests shall be conducted per Items 14 – 18.**
- **Flue CO Tests**
  - **Test conditions prescribed in Item 24 shall first be established.**
  - **CO Tests shall be performed after a minimum of 5 minutes of burner operation.**
  - **Flue Gas CO measurements shall be:**
    - **Taken in combustion gases free of dilution air.**
    - **Conducted in accordance with the Table 1-1.**

Table 1-1: Post-Repair/Replacement Flue CO Testing

APPLIANCE	CO MAXIMUM PPM		NATURAL DRAFT MEASUREMENT LOCATION*
	"AS MEASURED"	"AIR FREE"	
Forced Air Furnace	—	400	Inside each exhaust port separately
Gravity Furnace	—	400	Inside each exhaust port separately
Wall Furnace	—	200	Inside flue on each side of baffle
Wall Furnace (Direct Vent)	—	400	*
Floor Furnace	—	400	Inside each exhaust port separately
Vented Room Heater	—	200	Inside each exhaust port separately
Water Heater	—	200	Inside flue on each side of baffle
Oven/Broiler	225	—	Inside exhaust port
Top Burners and Griddle	25 (per burner)	—	Burner: 12" above flame Griddle: Inside port opening
Gas Log	25	400	Inside top edge of fireplace opening

*For Induced Draft and Closed Combustion appliances, flue gas CO is measured at the flue termination when it is accessible from the ground.

SEE SEPARATE "NONFEASIBILITY CRITERIA" WORD DOCUMENT FOR THE NONFEASIBILITY PAGE TO THIS SECTION

DUCT TESTING STANDARDS

1. EQUIPMENT

- **Instrumentation Minimum Specifications**
  - Pressure Measurements
    - Measurement systems shall have an accuracy of ± 0.2 Pa or 1% of reading, whichever is greater, and
    - Shall utilize static pressure probes specified by the measurement equipment manufacturer.
  - Duct Leakage Measurements
    - Duct leakage testing shall have an accuracy of ± 3% of measured flow, and
    - Shall utilize digital gauges specified by the measurement equipment manufacturer.
  - Airflow Measurements
    - Airflow testing shall have an accuracy of ± 7% of measured flow, and
    - Shall utilize digital gauges specified by the measurement equipment manufacturer.
- **Approved Leakage Measurement Equipment**
  - Equipment shall meet the Title 24 requirements specified in the 2005 Residential ACM Manual, Appendices RC and RE.
  - May include, but is not limited to a Duct pressurization system, e.g., Duct Blaster™.

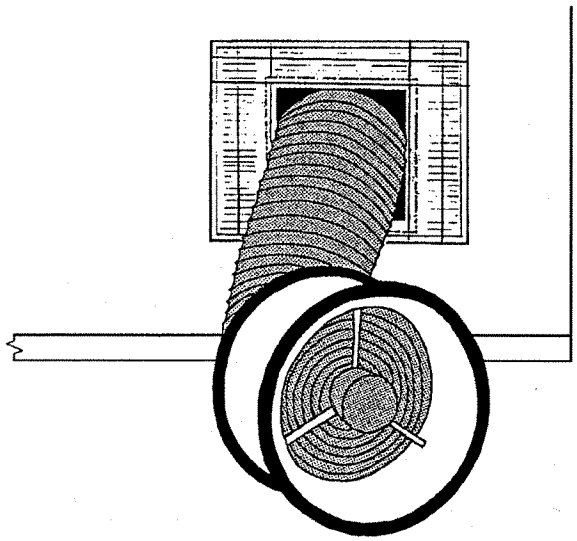

DUCTS PRESSURIZED WITH DUCT TESTER FAN

2. HVAC SYSTEM AIRFLOW (FAN FLOW)

- **HVAC system airflow (fan flow) shall be determined in accordance with Title 24 2005 Residential ACM Manual, Appendices RC and RE, utilizing one of the following methods[1]:**
  - Nominal System Airflow (Fan Flow) Estimate
  - Flow Grid Measurement
  - Plenum Pressure Matching Measurement
  - Flow Capture Hood
- **Nominal System Airflow (Fan Flow) Estimate**
  - Air conditioner cooling capacity shall be determined in tons, and furnace heating capacity (output) shall be determined in KBtuh, in accordance with ACM Residential Manual Appendix RC-2005, §RC.4.2, "System Fan Flow."
    - Cooling-only Systems: Allow 400 cfm per ton of cooling capacity.
    - Heating-only Systems:
      - Allow 21.7 cfm per KBtuh heating output.
      - For electric heat: [(Watts x 3.413 x 0.95) / 1,000] <u>or</u> [Kilowatts x 3.242] = KBtuh output.
    - Heating and AC Systems: Fan flow cfm shall be the greater of cooling capacity cfm <u>or</u> heating capacity cfm.
  - HVAC capacity (output) shall be determined in accordance with standard industry practice, such as the following (see Appendix -B-):
    - Air Conditioner Capacity (Tons)
      - The Preston Guide or Carrier Blue Book
      - Model Number Nomenclature
    - Heating System Capacity (KBtuh)
      - Btuh capacity (output) from Appliance Nameplate.

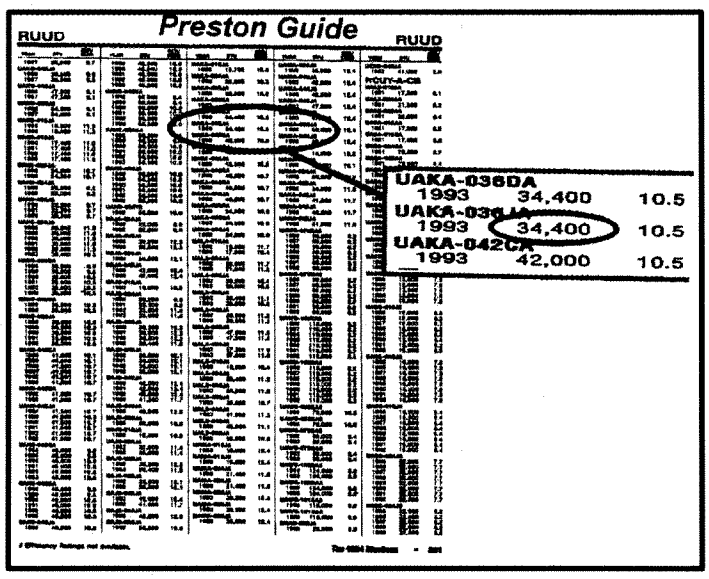

[1] See Mobile Home WIS Appendix -B-, "Methods for Estimating and Measuring Airflow".

2. HVAC SYSTEM AIRFLOW (FAN FLOW) (continued)

- **Flow Grid Measurement**
  - Equipment used for measurements shall meet the requirements specified in ACM Residential Manual Appendix RE-2005, §RE.3.1.3, "Flow Grid Measurement."
    - Measurements shall be in accordance with manufacturer's instructions, which take precedence, and Mobile WIS Appendix -B-.

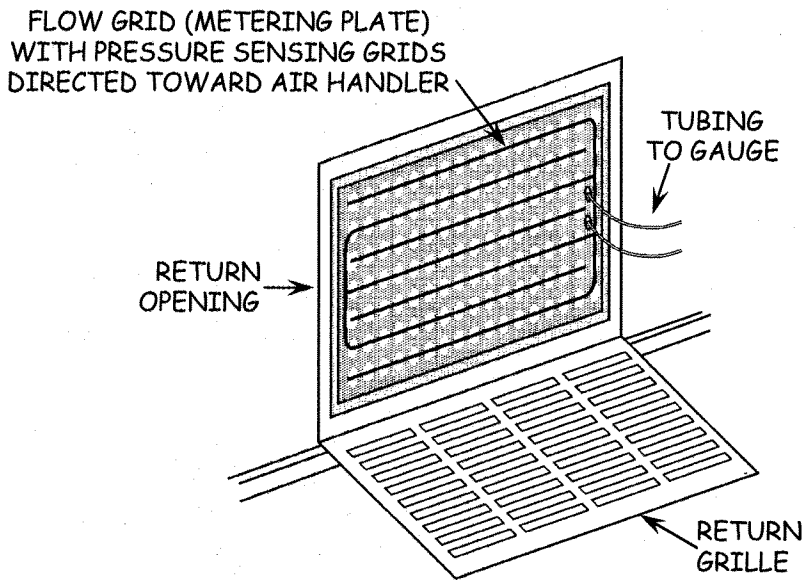

2. **HVAC SYSTEM AIRFLOW (FAN FLOW) (continued)**
   - **Plenum Pressure Matching Measurement (Duct Tester Used as a Powered Capture Hood)**
     - Equipment used for measurements shall meet the requirements specified in ACM Residential Manual Appendix RE-2005, §RE.3.1.1, "Plenum Pressure Matching Measurement."
     - Measurements shall be in accordance with manufacturer's instructions, which take precedence, and Mobile WIS Appendix -B-.

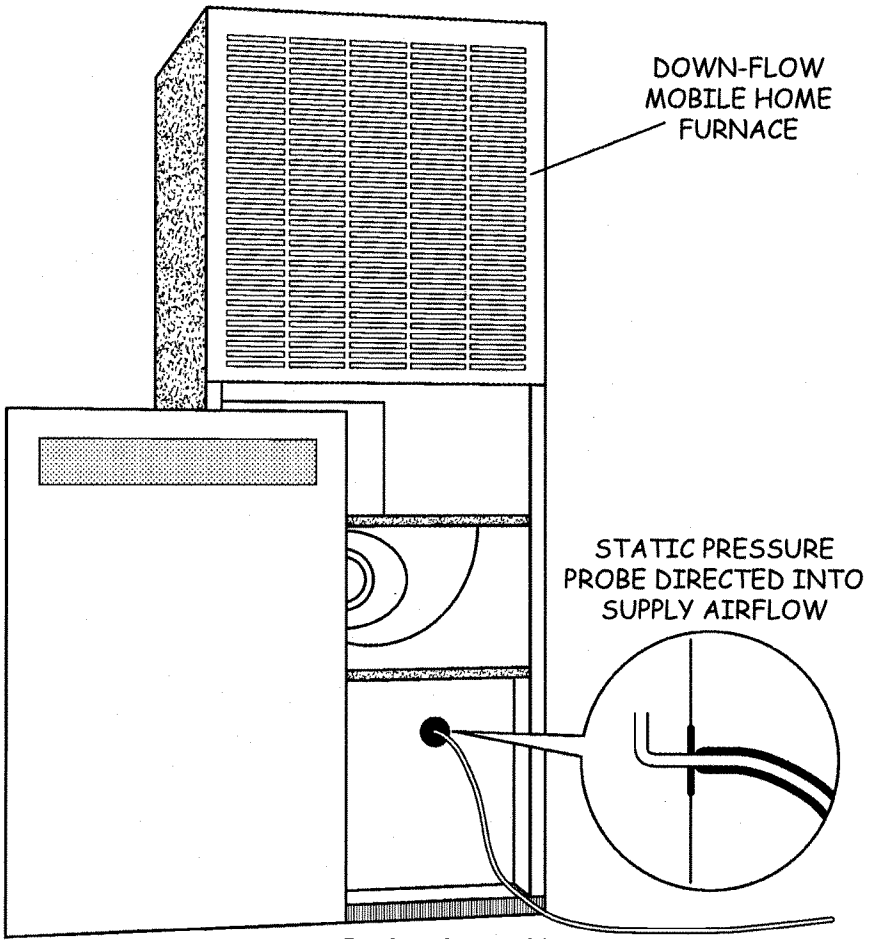

2. HVAC SYSTEM AIRFLOW (FAN FLOW) (continued)

- **Flow Capture Hood**
  - Equipment used for measurements shall meet the requirements specified in ACM Residential Manual Appendix RE-2005, §RE.3.1.2, "Flow Capture Hood Measurement."
  - Measurements shall be in accordance with manufacturer's instructions, which take precedence, and Mobile WIS Appendix -B-.

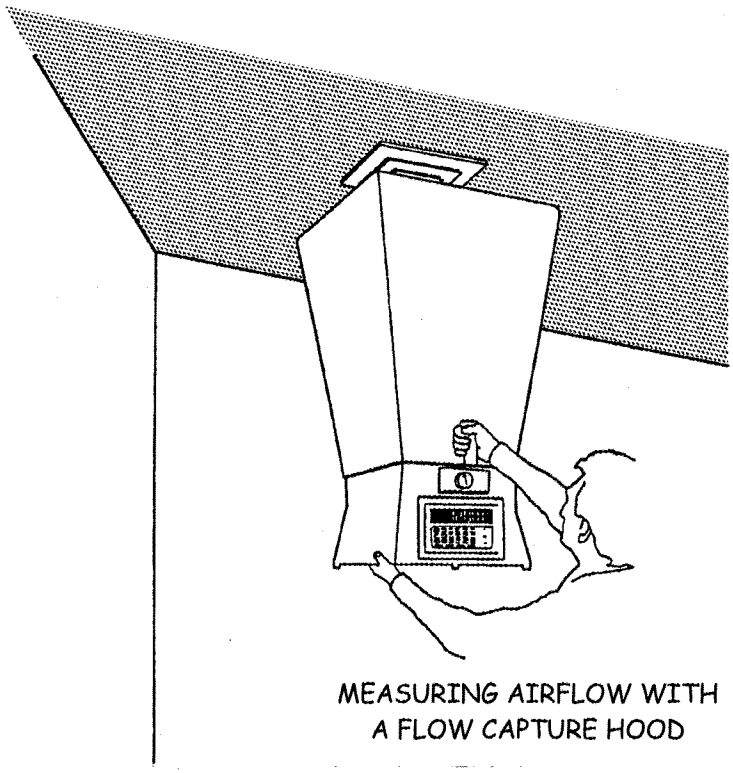

MEASURING AIRFLOW WITH
A FLOW CAPTURE HOOD

3. TEST CONDITIONS FOR ALL DUCT LEAKAGE TESTS

- **Equipment Operation**
  - The HVAC system must be operated briefly to determine that the FAU functions properly prior to performing any duct tests.
  - Duct Testing shall not be performed if:
    - The FAU is inoperable, or
    - A hazardous conditions exists (e.g., burner/flame abnormality, high CO, cracked heat exchanger) that requires service/adjustment or repair/replacement per NGAT standards/policy.
- **Air filters**
  - Filter(s) shall be removed from the duct system.
- **Ventilation Air Intakes**
  - Intakes connected to the duct system (e.g., makeup air, economizer venting damper, etc.) shall be temporarily sealed.
- **All fan-equipped appliances shall be turned off, such as:**
  - HVAC equipment: FAU and room air conditioners.
  - Exhaust devices: fans and clothes dryer vented outdoors.
- **Duct system terminals shall be blocked as applicable.**
  - One return register or air handler access shall remain unblocked for installation of duct tester.
  - All other supply registers and return grilles shall be blocked/sealed per Item 4.

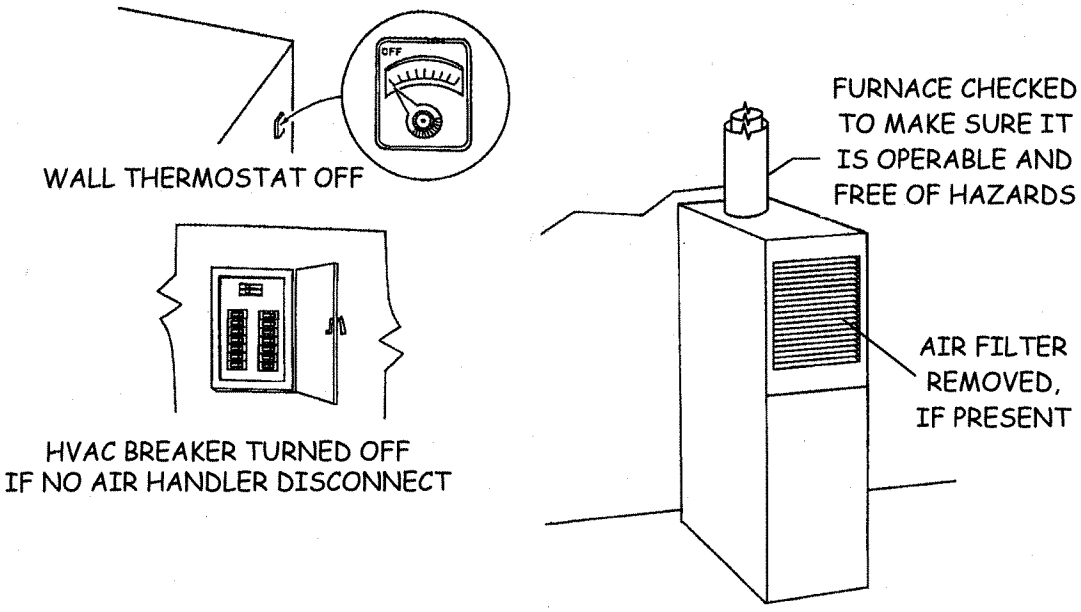

4. BLOCKING SUPPLY AND RETURN DUCT TERMINALS

- **Terminations must be temporarily covered/blocked for tests.**
  - Blocking/sealing methods/materials must not damage home finishes.
  - The same blocking method shall be used for all tests.
  - Blocking material must achieve a complete seal of register/grille.
- **Face Seal Supply Register/Return Grille**
  - The face of the register/grille is covered with a temporary barrier material (register-sealing film, wide masking tape, etc.).
  - Barrier material is restricted to the face of the register/grille.
- **Lap Seal Supply Register/Return Grille**
  - The register/grille is covered with temporary barrier material that laps onto the surrounding surface.
  - This method may <u>not</u> be used where damage to the surrounding surface will occur.
- **Cover Pan Method**
  - The supply/return opening is covered with a sealed pan-shaped device held firmly in place.
  - The edge/flange of the cover pan must be gasketed to achieve a complete seal.
  - This method shall <u>not</u> be used where acoustical texturing is present.

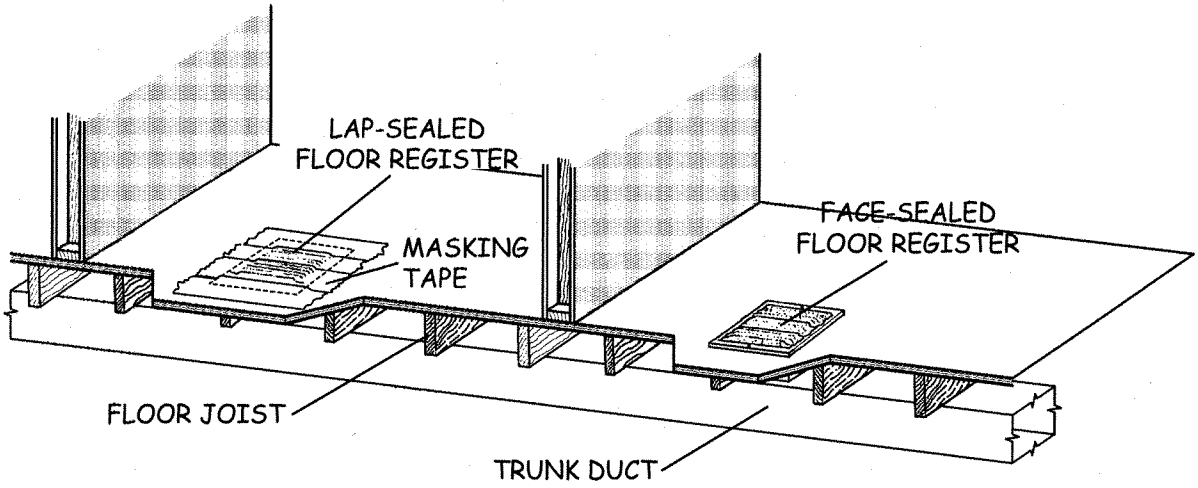

5. DUCT TESTER INSTALLATION

- **Test equipment shall be set up, calibrated, and operated in accordance with manufacturer's instructions.**
- **General Guidelines for Duct Tester Fan Installation**
  - The duct tester fan housing or remote connector assembly (e.g., transition piece) is attached to the HVAC system.
  - The remote connector is attached to the return grille (minimum 1'x1' grille required), or to the air handler access.
  -
  - The fan/connector is secured and sealed completely with temporary tape/film.
  - The duct-pressure sampling hose/probe is installed from the digital pressure gauge to inside the taped register nearest the supply plenum.
  - The Fan Pressure hose is installed from the digital pressure gauge to the duct tester fan pressure tap.

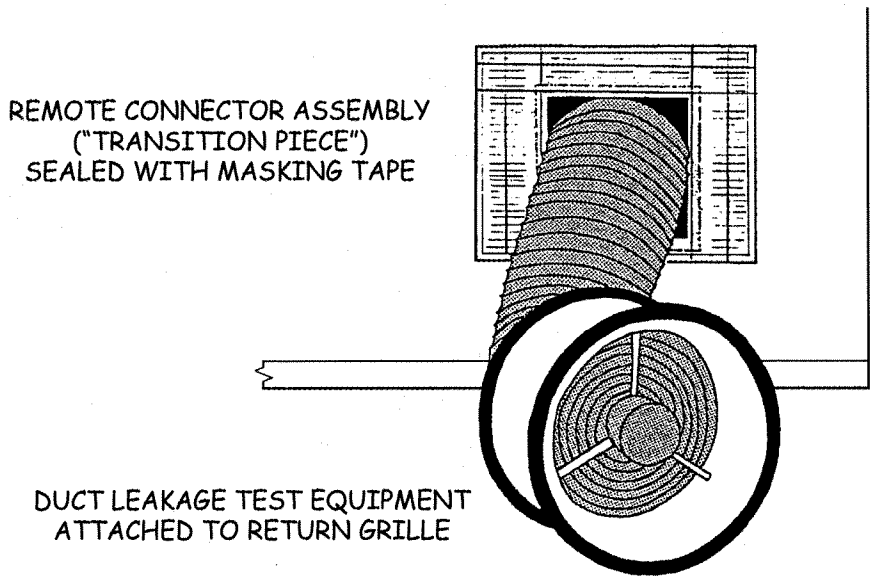

6. TOTAL DUCT LEAKAGE TEST

- **Tests shall be performed in accordance with test equipment manufacturer's instructions.**
- **Test Conditions and Preparation**
  - Test conditions shall be established per Item 3.
  - Supply and return duct terminations shall be blocked per Item 4.
  - Duct tester shall be set per Item 5.
- **Total Duct Leakage Test**
  - To prevent depressurization of the conditioned space by the duct tester fan, an entry door or large window shall be opened.
  - To prevent pressurization of an unconditioned space containing ducts, the space must communicate with outdoors (e.g., by opening vents, access cover/door, etc., as needed).
  - People and objects must be kept away from the front of, and at least one foot to the side of, the duct tester fan inlet during tests.
  - Digital pressure gauge Mode shall be set for one-second averaging, or as recommended by manufacturer.
  - Digital pressure gauge shall be set on high Range, or as recommended by manufacturer.

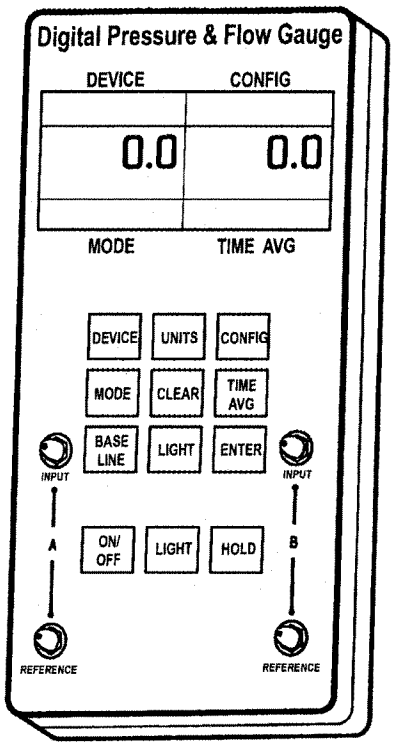

DIGITAL GAUGE FOR MEASURING PRESSURE AND AIRFLOW

6. **TOTAL DUCT LEAKAGE TEST (continued)**
   - **Pressurization test shall be performed per manufacturer's instructions, using flow control device (e.g., "Flow Ring") as needed.**
     - Duct Tester fan shall be adjusted to pressurize ducts to 25 Pa.
     - Flow control device shall be changed as needed to keep Fan Pressure within an acceptable range, as indicated in Table 10-1 for the Minneapolis Duct Blaster™.
   - **Total Duct Leakage**
     - Total Duct Leakage CFM_{25} shall be determined.
     - For digital pressure gauges that do not automatically convert fan pressure to fan flow, manufacturer's conversion tables and procedures shall be utilized to calculate Total Duct Leakage in cfm.
     - Total Duct Leakage in cfm shall be divided by Forced Air System Airflow in cfm and converted to a percentage:

       [Total Leakage ÷ System Airflow] x 100 = % of System Airflow
     - Target Total Duct Leakage is <15% of System Airflow, or as specified in the program P&P (see Item 7).
   - **Very Leaky Systems**
     - When a Duct Pressure of 25 Pa cannot be achieved, and the digital gauge does not automatically estimate cfm at 25 Pa, manufacturer's instructions shall be followed.

TABLE 11-1: FAN FLOW CONTROL

Fan Configuration	Flow Range in CFM
Open Fan (no Flow Ring)	600 to 1,500
Ring 1	225 to 800
Ring 2 (smaller opening)	90 to 300
Ring 3 (smallest opening)	20 to 125

7. DUCT SEALING PROTOCOL

- **Standards**
  - Duct repairs and sealing shall be performed in accordance with Duct Sealing Standards (Section 17).
- **Start Criteria**
  - Duct repair and sealing work may begin only if the *Initial* Total Duct Leakage satisfies the Start Criteria in the Program Policy & Procedures.
- **Stop Criteria**
  - One of the following LIEE P&P requirements shall be satisfied (per Table 11-2):
    - Target Leakage (stop) criteria, or
    - Default Stop criteria—all accessible leaks sealed.
- **Required data shall be recorded on the data form, including:**
  - Total Duct Leakage (or Leakage to Outside) CFM_{25} from the *Initial* test, performed before starting duct repair and sealing work.
  - Total Duct Leakage (or Leakage to Outside) CFM_{25} from the *Final* test performed after completing duct repair and sealing work.

TABLE 11-2: DUCT SEALING TARGET LEAKAGE

MEASUREMENT METHOD	TARGET LEAKAGE (STOP CRITERIA)
(A) Total Duct Leakage	**<15% of System Fan Flow**
(B) Duct Leakage Reduction	**>60% Leakage Reduction[1]**
(C) Prescriptive Default	**Target Not Met but All Accessible Ducts are Sealed[2]**

[1]Final duct leakage compared to Initial duct leakage, with a smoke test to confirm that all accessible leaks have been sealed.

[2]When leakage target cannot be met, all accessible leaks must be sealed, as confirmed by a smoke test.

8. WRAP-UP PROCEDURE

- **Following completion of duct testing, the HVAC system, appliances and the home shall be returned to original condition.**
- **Temporary sealing removed:**
  - All temporary sealing and blocking materials (register-sealing film, temporary tape, foam plugs, etc.) shall be removed.
  - Ventilation air intakes (see Item 3) shall be restored to normal.
- **Air filter(s) reinstalled:**
  - Filters removed for testing shall be reinstalled.
  - Dirty filters shall be cleaned before reinstallation.
- **Appliances and furnishings restored:**
  - Wall thermostat, water heater control, HVAC/air handler power, windows, doors, fans, room air conditioners, etc. returned to pre-test settings.
  - Home furnishings returned to original locations.
  - All test equipment, tools, supplies, and trash removed from the home.

THERMOSTAT RESET

REGISTER SEALS REMOVED

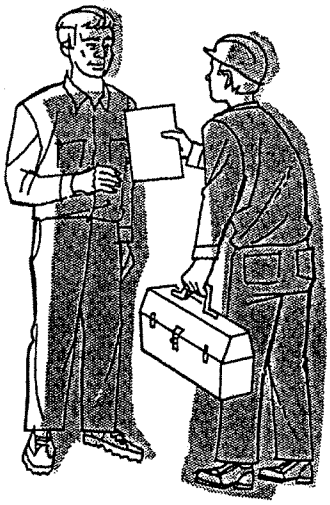

COMMUNICATION WITH CUSTOMER

SEE SEPARATE "NONFEASIBILITY CRITERIA" WORD DOCUMENT FOR THE NONFEASIBILITY PAGE TO THIS SECTION

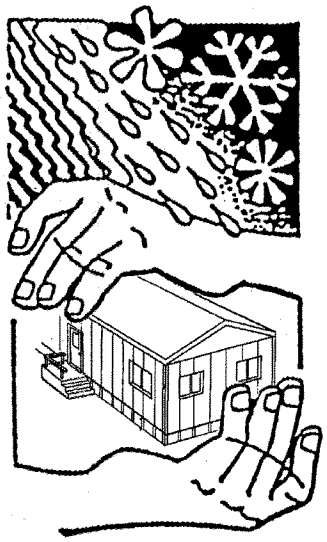

CALIFORNIA MOBILE HOME WEATHERIZATION INSTALLATION STANDARDS

for use in

California's Low Income Energy Efficiency Programs

administered by

San Diego Gas and Electric Company
Southern California Edison
Southern California Gas Company
Pacific Gas and Electric Company

Part 2b (Mobile-*edits accepted*)

OCTOBER 20, 2005 –*REVISIONS*

NATURAL GAS CENTRAL FORCED AIR HEATING SYSTEMS REPAIR AND REPLACEMENT STANDARDS

PART 1: APPROVED MATERIALS

1. ALL MATERIALS

- **Materials installed within a manufactured home shall be in compliance with HCD regulations and HUD MHCSS (Code of Federal Regulations, Chapter XX, Part 3280).**
- **Materials installed outside a manufactured home shall be in compliance with HCD regulations or, as applicable, requirements of the local building department.**

2. HVAC EQUIPMENT

- **Furnaces**
  - All units and components shall be UL listed and AGA certified.
- **Split Systems**
  - Furnaces shall be approved for manufactured home installation.
  - Furnace shall have an AFUE rating of at least 78%.
  - Air Conditioner, if replaced in conjunction with furnace:
- Minimum EER of 11.5 and SEER of 13.0, with a Thermostatic Expansion Valve (TXV).
- EER shall be determined by the coil match as listed in the current ARI Directory.
- **Package Units (Dual Packs):**
  - Furnace: Minimum AFUE rating of 78%.
  - Air Conditioner: Minimum EER of 11.5 and SEER of 13.0.

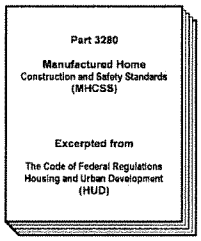

LISTED

LISTED FURNACES AND FLUE SYSTEMS MUST COMPLY WITH HUD MHCSS

3. INSTALLATION COMPONENTS

- **Metal Flue and Vent Pipes**
  - All installed materials shall comply with HUD MHCSS Section 3280.703 and, as applicable, local building department regulations.
  - Flue systems shall be UL listed and in compliance with furnace listing and manufacturer's specifications and instructions.
- **Gas Pipes and Valves**
  - Gas values shall be listed and AGA certified.
  - Gas flexible connectors shall be listed epoxy-coated or stainless steel units.
  - Pilot tubing shall be aluminum (copper not allowed).
  - Fuel-gas piping:
- Shall be in conformance with manufacturer's instructions, HUD MHCSS Section 3280.705 and, as applicable, requirements of the local building department.
- Copper gas lines not allowed.
- **Ducts and Sealants**
  - Materials shall be in conformance with Section 17, Duct sealing Standards.

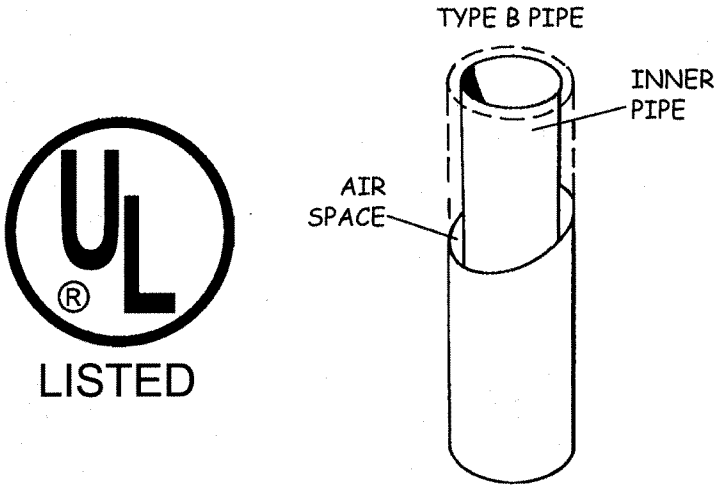

METAL PIPES AND ASSEMBLIES
UL LISTED AND MFR. COMPLIANT

3. **INSTALLATION COMPONENTS (continued)**

- **Programmable Wall Thermostat**
  - ENERGY STAR® qualified.
  - System powered, not battery powered, on 24 volt systems.
  - Digital with anti-short-cycle feature.
  - Minimum setback capability of 10°F.
  - At least two setback periods per 24 hour day, with change cycle increments being no greater than 30 minutes.
  - Manual override and standard alkaline battery backup or other program saving backup system.
  - Positive on/off switch that is easily accessible.
  - Compatible with the HVAC equipment.
- **Standard Wall Thermostat**
  - Alternative when customer refuses programmable thermostat.
  - Digital with built in anti-short-cycle feature.
  - Conforms with manufacturer's instructions.
  - Compatible with the HVAC equipment.
  - Includes a positive on/off switch.

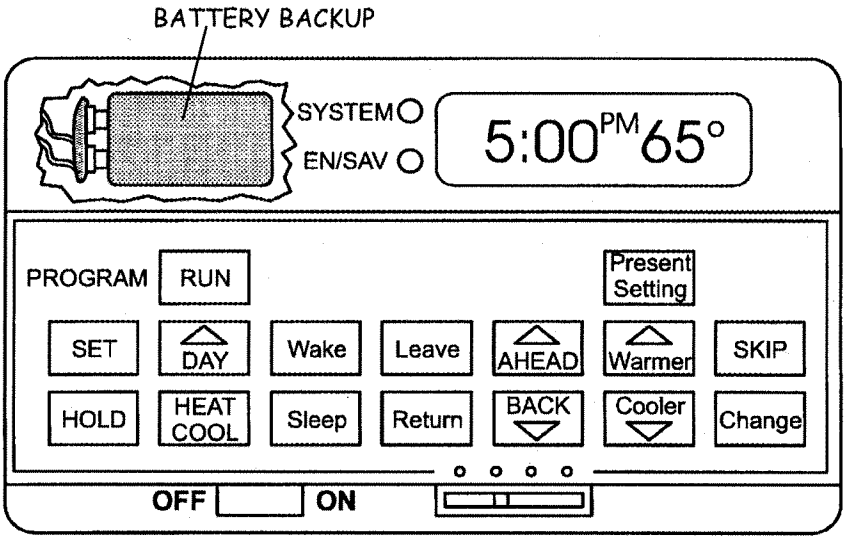

DIGITAL PROGRAMMABLE THERMOSTAT
WITH ON/OFF SWITCH

3. **INSTALLATION COMPONENTS (continued)**
   - **Central Heating and Air Conditioning Air Filters**
     - Shall be washable, UL listed Class 2 filter material in conformance with ARI Standard 680 and UL-900 or UL-1096.
     - "Hog Hair" Type and Other Bonded Fiber
   - 1" thickness shall be used in central HVAC systems.
     - Foam
   - 1/4" single layer foam, 20 to 30 pores per inch (ppi).
   - Foam shall be installed only when bonded fiber is not feasible or is prohibited by the appliance manufacturer.
     - Other Materials
   - "Sock" type foam and other specialty materials may be installed where required by appliance manufacturer.

4. **WARRANTY**
   - **HVAC Unit Installations**
     - Parts and labor shall be covered by a minimum one (1) year written parts and labor warranty.
     - Compressor warranty shall extend to five (5) years.
     - All written warranty information and manufacture's operating and maintenance instructions shall be supplied to the customer.
   - **Wall Thermostats**
     - Minimum one-year manufacturer's warranty.
     - Minimum one-year parts and labor contractor's warranty.

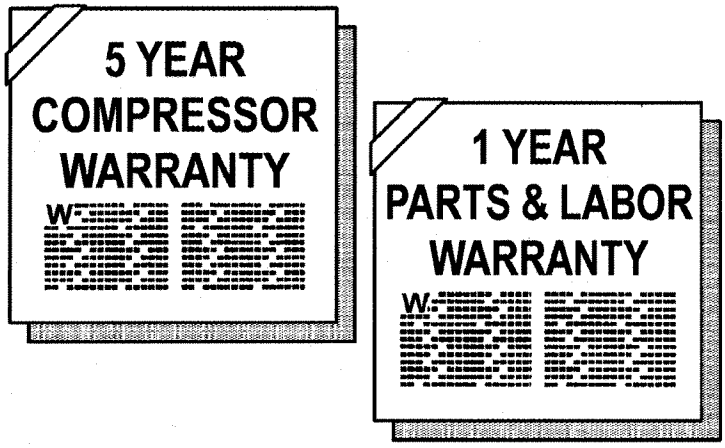

PART 2: NEW FURNACE AND COMBINED FURNACE AND AIR CONDITIONER INSTALLATION

5. GENERAL REQUIREMENTS

- **A permit shall be obtained from and finalized by:**
  - HCD for installations inside the mobile home.
  - HCD or, as applicable, the local building department for installations outside the mobile home.
- **Installation shall be in compliance with manufacturer's instructions and specifications, and, as applicable, with:**
  - HUD MHCSS, the requirements of HCH, and as applicable
  - Requirements of the local building department.
- **Lead-safe practices shall be employed when working with pre-1979 painted materials per state codes T8 Section 1532.1 and T17 Section 36000, et seq.**
- **Air Distribution System**
  - Distribution system shall be in conformance with HVAC manufacturer's specifications.
  - Retrofit Units Utilizing Existing Duct System
  - Duct system shall be examined for leaks in accordance with the program Policy and Procedures.
  - Testing shall be performed in accordance with WIS Section 11, Duct Testing Standards, and repairs and sealing shall be made in accordance with WIS Section 17, Duct Sealing Standards.

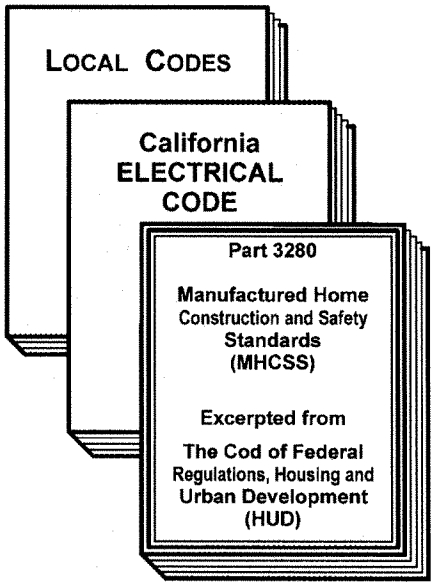

  - The supply and return plenums shall be securely attached to the air handler, with ductwork securely attached to the respective plenums.
  - New ductwork shall be installed in conformance with manufacturer's instructions.

PART 3: NEW FURNACE INSTALLATION

6. LOCATION

- **FAU Enclosure**
  - Enclosure shall be the proper size for required clearances.

7. SYSTEM DESIGN AND PERFORMANCE

- **All Installations**
  - Unit shall be properly sized in accordance with Title 24, HCD requirements, or local code, whichever is most stringent.
  - Capacity of the new system should be equal to or smaller than the existing system.
- **Installations Utilizing Existing Ducts**
  - New FAU shall be compatible with existing duct system.

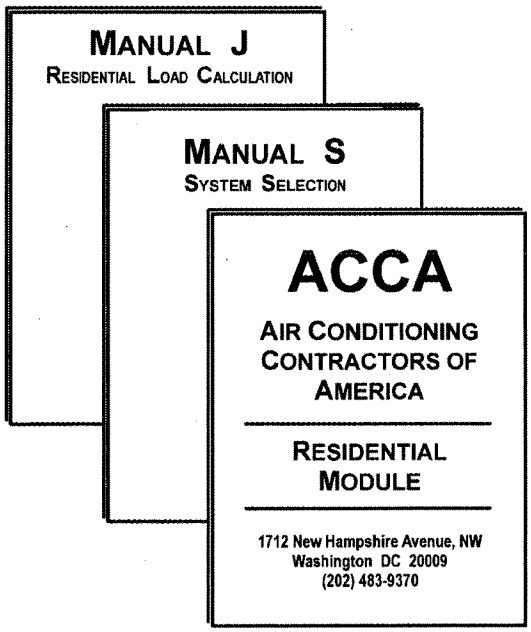

8. NEW FURNACE INSTALLATION

- **Plumbing/Piping**
  - Risers, flexible connectors, fittings and valves shall be installed in conformance with manufacturer's instructions, HUD MHCSS Section 3280.705, and as applicable, requirements of the local building department.
  - Only new parts shall be installed; used parts not allowed.
  - Shutoff valve shall be within 3' of the appliance and in the same room or space where the appliance is located.
- **Wall, Door, and Floor Repairs**
  - Repairs shall blend with surrounding surfaces.
  - Abandoned floor openings shall be closed in a workmanlike manner:
- Flush with surrounding flooring material, or
- Recessed to accommodate future installation of floor covering material.
  - All construction debris shall be removed from the crawl space and the premises.

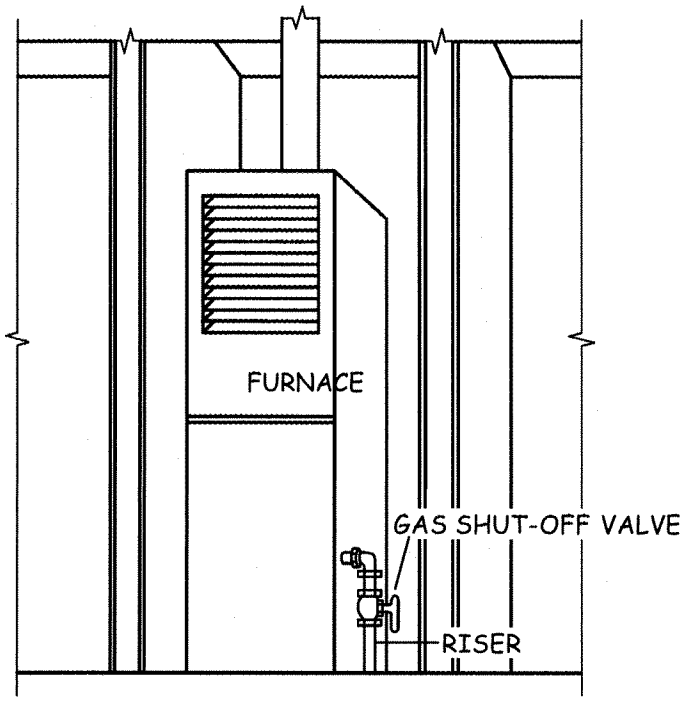

9. COMBUSTION AIR

- **All Furnaces**
  - Combustion air shall be supplied from outdoors in conformance with furnace listing, manufacturer's instructions, and HCD regulations.
- **Furnaces Drawing Combustion Air from Undercarriage Space**
  - Undampered venting shall be present in the skirting.
  - Cross-ventilation shall be present, with venting located on at least two different sides of the mobile home skirting.
  - Skirting vents on each side shall provide at least 1.5 sq. ft. NFVA for each 25 linear feat of mobile home length.

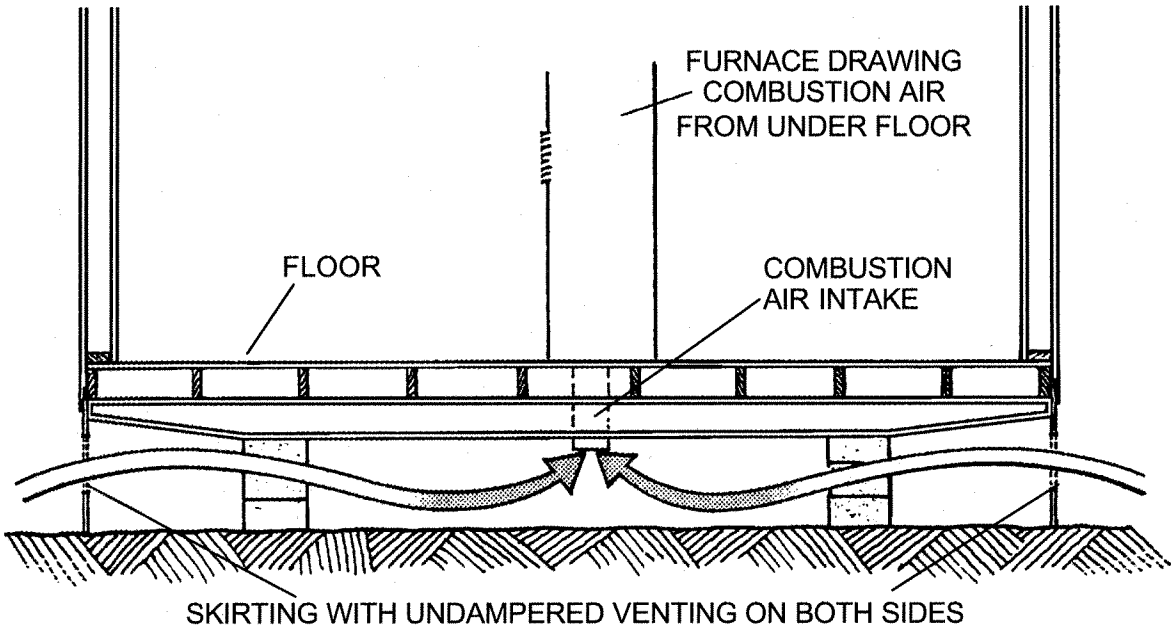

10. ISOLATION OF RETURN AIR

- **The return air system shall not have leaks which:**
  - Depressurize any open combustion appliance enclosure.
  - Draw in combustion air or combustion byproducts from any open combustion appliance (e.g., from furnace itself or nearby water heater).
  - Depressurize or draw air from a space where hazardous chemicals are stored or toxic fumes may be present.
- **The following conditions are not allowed:**
  - An open combustion FAU drawing non-ducted return air through a grille in the furnace cabinet.
  - A closed combustion FAU located in an appliance enclosure adjacent to an open combustion water heater when:
- The furnace enclosure is part of the return system and
- The two appliances are not separated by an airtight barrier.
- **Any condition which allows pollutants to be drawn into the FAU return shall be corrected.**

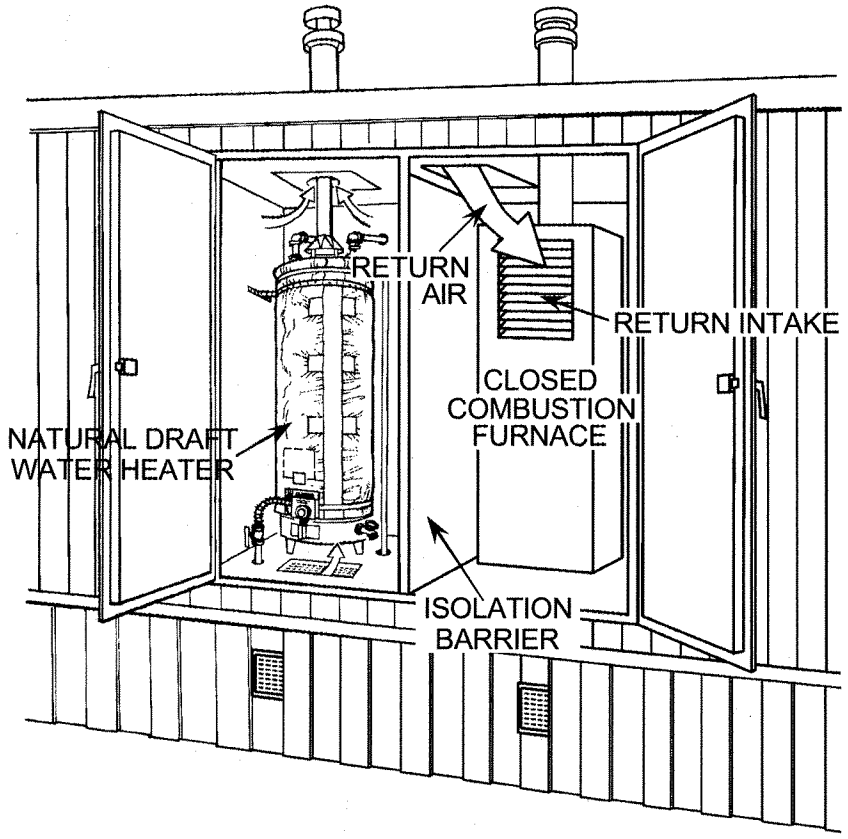

11. AIR DISTRIBUTION SYSTEM

- **Existing Duct System**
  - System shall be examined for leaks and disconnections and repaired as needed in accordance with the program Policy and Procedures.
  - Testing shall be performed in accordance with WIS Section 11, Duct Testing Standards, and duct repairs and sealing shall be made in accordance with WIS Section 17, Duct Sealing Standards.
- **Return System**
  - Belly-Cavity and Roof-Cavity Returns
- In accordance with the program Policy and Procedures:
    - Existing belly-cavity return shall be abandoned, and a new ducted central return shall be installed.
    - Existing leaky roof-cavity return shall be repaired as applicable, and replaced with a new central return when repair is needed but not feasible.
  - New central return shall be designed and installed in conformance with WIS Section 17 and HCD requirements.
- **Cabinet and Plenum**
  - Components shall be mechanically attached and sealed around the perimeter (cabinet-to-duct connector, cabinet-to-plenum) using materials and methods prescribed in WIS Section 17.
  - Plumbing and wiring penetrations into the evaporator coil box and return air chamber shall be sealed with cork tape.
- **New Ductwork**
  - Components shall be installed in conformance with manufacturer's instructions

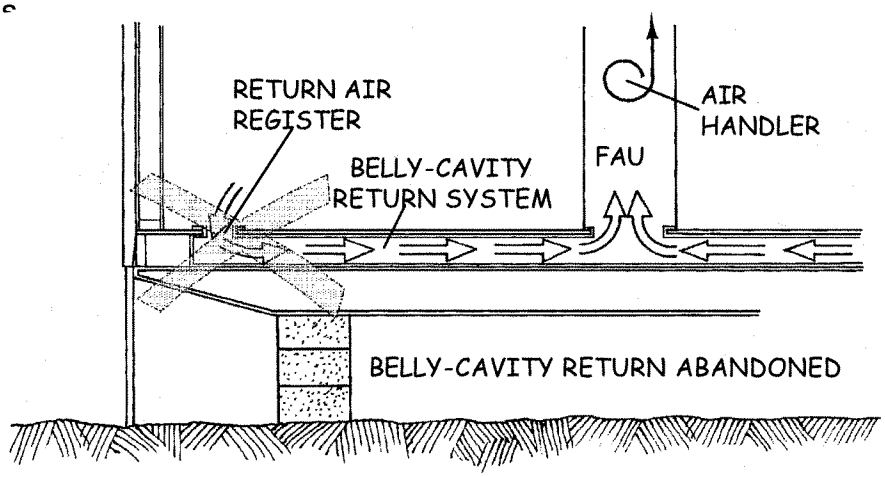

12. FLUE AND VENT SYSTEMS

- **Listing specifications, manufacturer's instructions, and HCD regulations shall be followed for:**
  - Installation of a new flue/vent system.
  - Connection to an existing flue/vent system.
- **Existing flue/vent system shall be replaced unless it:**
  - Is in good condition (free of leaks, deterioration, damage, etc.).
  - Meets listing requirements of the replacement furnace.
  - Is in conformance with furnace manufacturer's instructions.

13. ELECTRICAL WIRING

- **All electrical wiring shall be installed in conformance with manufacturer's instructions, HUD MHCSS Section 3280, Subpart I, and as applicable, requirements of the local building department.**
- **Service Disconnect**
  - For installations inside the mobile home, requirements of HCD shall be met.
  - For installations outside the mobile home:
- Requirements of HCD and as applicable, requirements of the local building department shall be met.
- An independent means of disconnect within view of the equipment shall be provided when required (e.g., for a new split system condenser).

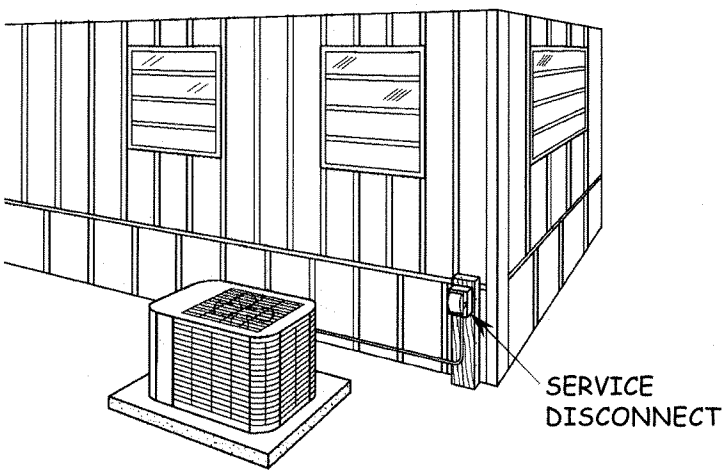

SPLIT SYSTEM REPLACEMENT CONDENSER UNIT

14. GAS LINES, FITTINGS AND VALVES

- **All Installations**
  - All gas piping (e.g., risers, flexible connectors, fittings and valves) shall be installed in conformance with manufacturer's instructions, HCD requirements, and local code.
- Gas shut-off valve shall be in good condition and in conformance with Item 3.
- Gas flexible connector shall be new (existing shall not be reused).
  - All new and affected lines and components shall be checked for gas leaks by a method approved by the authority having jurisdiction, such as one of the following:
- Commercial leak detection liquid.
- Electronic leak detector.
- Pressure test of the line.

15. CENTRAL AIR CONDITIONERS COMBINED WITH FURNACE

- **Equipment shall be installed as prescribed in Part 5.**

16. WALL THERMOSTATS

- **When required by the Program Policy and Procedures, a programmable thermostat shall be installed as prescribed in Part 6.**

ELECTRONIC LEAK DETECTOR

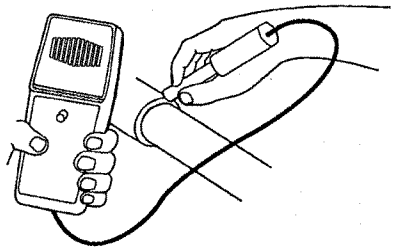

LIQUID LEAK DETECTION METHOD

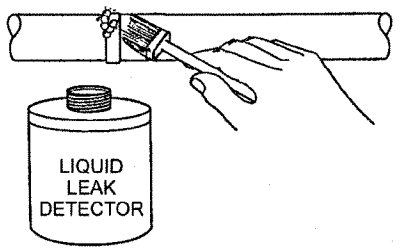

GAS LINE FITTINGS, VALVES, AND CONNECTORS CHECKED FOR GAS LEAKS

PART 4: FURNACE REPAIRS

17. PRELIMINARY EXAMINATION

- **The furnace shall be checked for the presence of defects, such as the following:**
  - Gas leaks at valves, fittings, joints, or flexible gas connectors.
  - Presence of copper gas line or butt-soldered joints.
  - Heat exchanger defects (e.g., cracks, holes, deterioration).
  - Excessive rust in the draft hood or heat exchanger.
  - Flue/vent system defects, such as:
- Disconnections, leaks, obstructions, etc.
- Defective/missing cap.
- Misaligned, defective or multiple draft hoods.
- Inadequate clearance from combustibles.
- Improper termination.
- Single-wall pipe used where double-wall is required (e.g., extending beyond ceiling.
  - Burner defects, such as:
- Excessive soot or rust.
- Dirty or improperly adjusted.
- Flame impingement and/or abnormal flame.
- Delayed or rollout ignition.
- Incorrect orifice.
- Over- or under-fired.

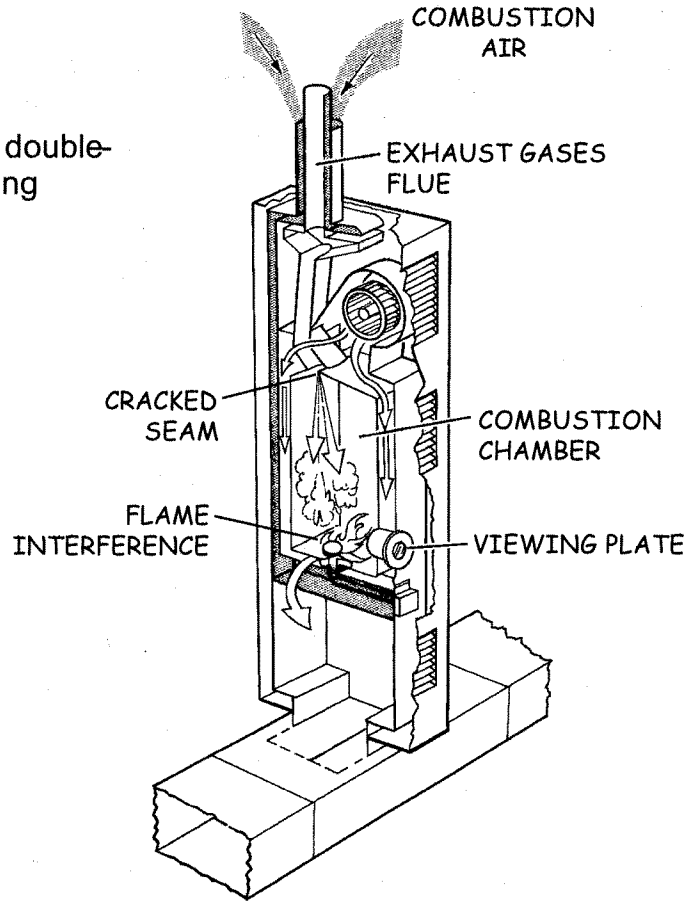

17. PRELIMINARY EXAMINATION (continued)

- **The furnace shall be checked for the presence of defects, such as the following:**
  - Improper position of thermocouple/pilot generator, pilot or flame.
  - Inadequate/improper combustion air venting.
  - Controls
- Electrical disconnection or defect.
- Improper adjustment.
  - Distribution System
- Return leaks that could draw in combustion products or other pollutants.
- Furnace-to-floor/plenum gaps/leaks.
- Dirty, defective, or missing HVAC unit air filter.
  - Blower Chamber
- Need for cleaning or lubrication of blower.
- Loose or unsafe wiring.
  - Evaporator Coil Box
- Dirty or damaged evaporator coil.
- Air leaks at plumbing or wiring penetrations.
  - Heating unit integrity:
- Loose or hazardous wiring.
- Loose or missing components.
- Improper alteration of the heating unit.

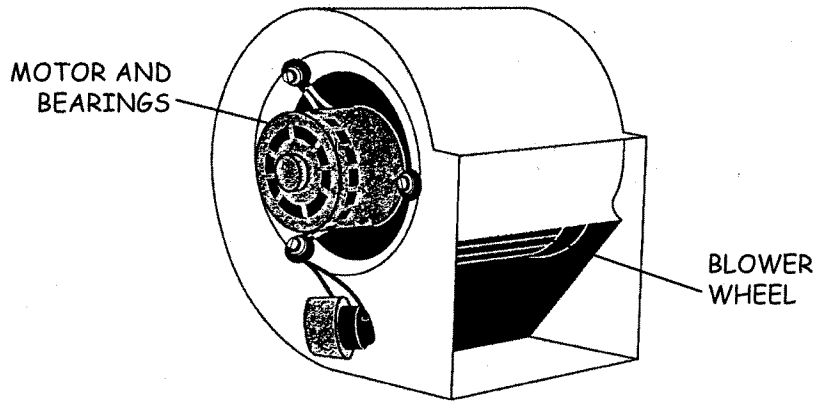

18. DUCT TESTING AND SEALING

- **Duct system shall be examined for leaks and disconnections and repaired as needed in accordance with the program Policy and Procedures.**
- **Testing shall be performed in accordance with WIS Section 11, Duct Testing Standards, and repairs and sealing shall be made in accordance with the Section 17, Duct Sealing Standards.**

19. HVAC UNIT AIR FILTERS

- **All filters shall be properly installed and clean.**
- **Unframed filters shall be properly supported to prevent being drawn toward the air handler, as prescribed in Part 7.**

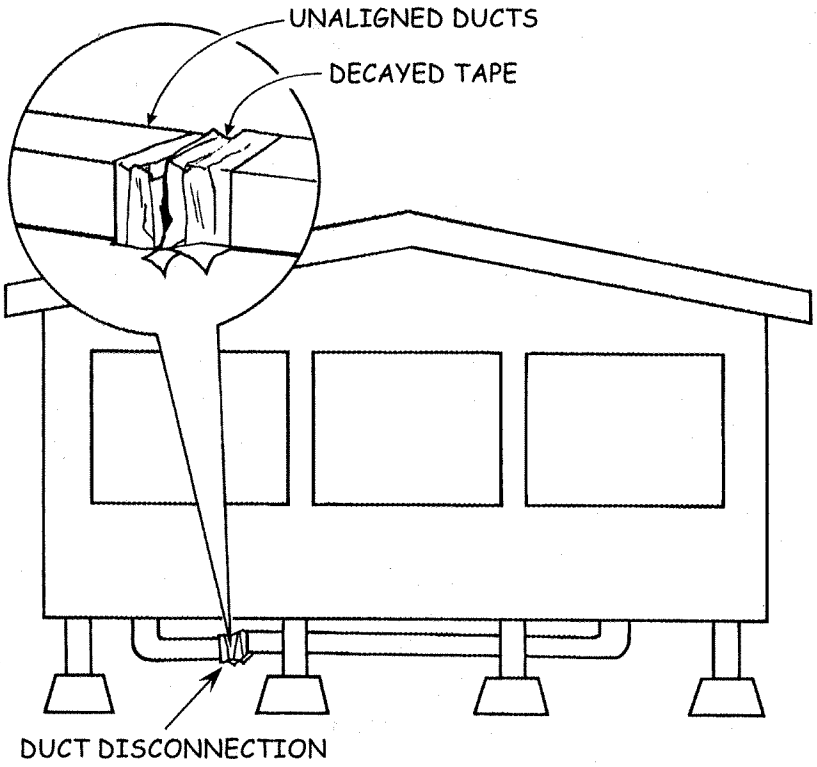

20. HEATING UNIT INTEGRITY

- **Loose items shall be tightened (e.g., screws, bolds, panels, etc.).**
- **Missing, defective or damaged components critical to proper operation shall be replaced or repaired (e.g., access door, roll-out shield, observation plate/gasket, etc.).**
- **Improper alterations that adversely affect unit operation or safety shall be corrected.**

21. RETURN AND SUPPLY

- **Return leaks in plenum/cabinet/duct that could draw in combustion products or other pollutants shall be repaired.**
- **Dirty blower chamber and fan blades shall be cleaned.**
- **Evaporator Section**
  - Evaporator coil shall be clean.
  - Penetrations shall be sealed (i.e., with cork tape).

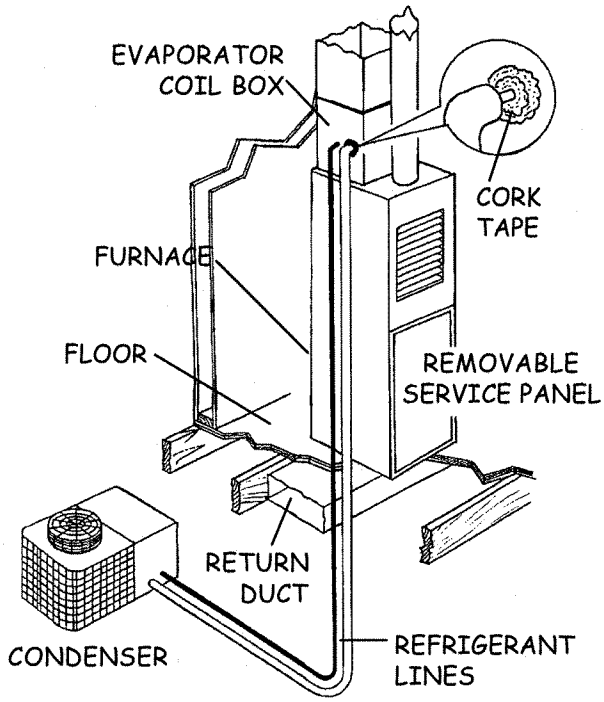

22. GAS CONTROL VALVE

- **The valve shall turn properly and be free of leaks and electrical defects (e.g., short or open).**
- **Gas pressure shall comply with manufacturer's specifications.**

23. GAS PIPING AND VALVES

- **Joints, fittings, appliance line valve, rigid and flexible connector, and gas control valve shall be checked for gas leaks by:**
  - Leak detection liquid/spray, or
  - Electronic leak detector.
- **Nonconforming items, including the following, shall be replaced with materials conforming to applicable code requirements:**
  - Defective gas shutoff valve or pipe fittings.
  - Rigid or flexible copper connector.
  - Butt-soldered joints.

24. WIRING

- **Unit shall be free of wiring defects (e.g., frayed or burned wires, loose or improper connections, etc.).**
- **Splices shall be:**
  - Located in junction boxes.
  - Secured with pressure splicing connectors (e.g., wire nuts).
- **Aluminum/copper splices shall not be made *unless:***
  - Splicing connectors used are identified for that purpose.
  - Conditions of use are met (e.g., application of antioxidant).

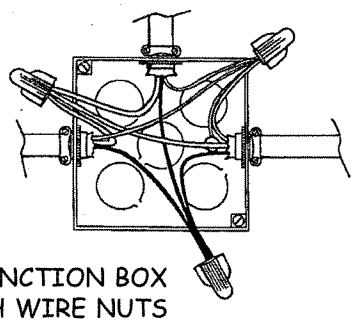

SPLICES IN JUNCTION BOX
SECURED WITH WIRE NUTS

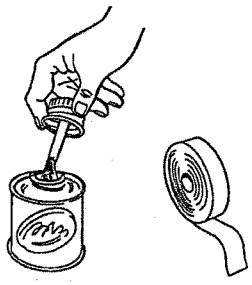

ANTIOXIDANT AND
ELECTRICIAN'S TAPE

25. PILOT AND THERMOCOUPLE OR PILOT GENERATOR

- **Thermocouple or pilot generator shall be correctly positioned in pilot flame.**
- **Pilot flame shall be properly adjusted.**
- **Voltage output shall be within specifications for proper operation of the Gas Control Valve.**

26. THERMOSTATS AND CONTROLS

- **Wall thermostat shall function properly:**
  - Anticipator correctly set to 24 volt heating control circuit amperage, when applicable.
  - Wiring connections correct and tight.
  - Unit level and securely installed.
- **Furnace controls, including limit switch and blower fan switch, shall operate in accordance with manufacturer's specifications.**
- **Power switches shall function properly, including:**
  - Blower access lockout/safety switch.
  - Switch controlling power to the unit (disconnect).
  - Blower speed control switch.

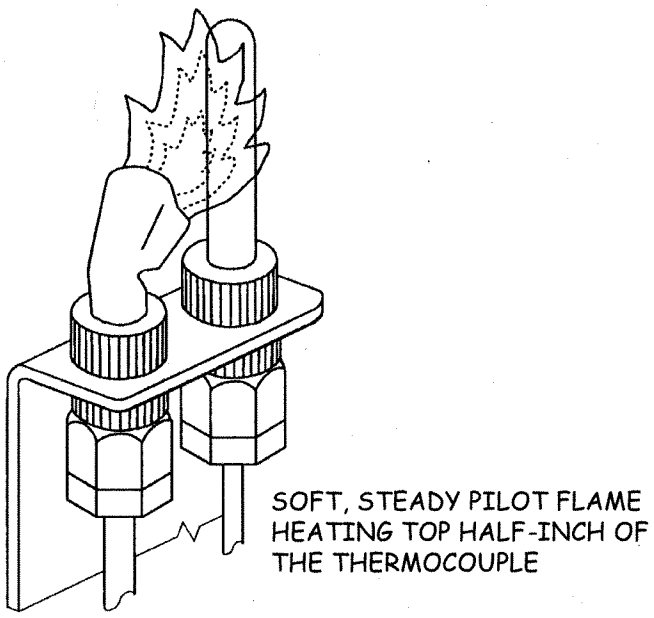

27. HEAT EXCHANGER

- **Heat exchanger shall be visually inspected for evidence of damage, deterioration, obstruction, etc.**
  - Mirror and a light shall be used, at a minimum.
  - A more sophisticated analysis shall be performed when necessary (e.g., smoke bomb or heat exchanger removal).
- **Observation shall be made for flame interference when blower starts.**

28. FLUE/VENT SYSTEM

- **Flue and vent systems shall:**
  - Be in conformance with MHCSS and HCD requirements.
  - Terminate at least 3' from an evaporative cooler intake.
- **Flue and vent system defects, including those listed below, shall be corrected.**
  - All Furnaces
- Obstructions, disconnections, deterioration, leaks, etc.
- Damaged/missing cap, or improper termination.
- Inadequate clearance from combustibles.
- Single-wall pipe used where double-wall is required.
  - Open Combustion Furnaces
- Misaligned, defective, or multiple draft hoods.
- Excessive soot or rust in or near the draft hood.

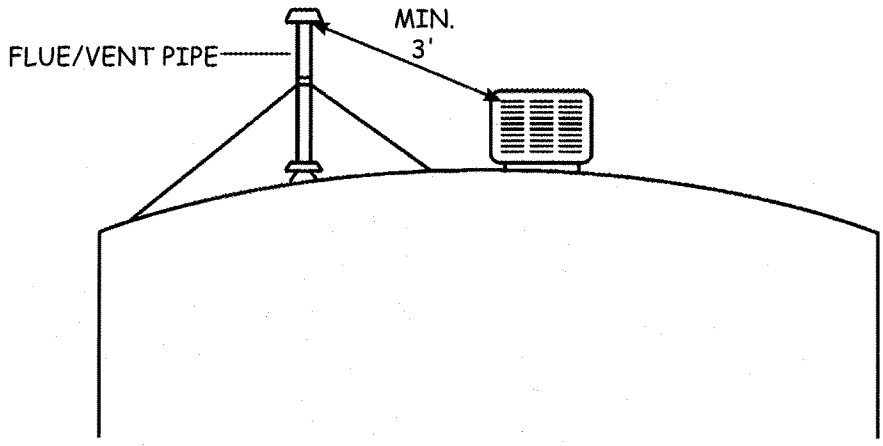

28. FLUE/VENT SYSTEM (continued)

- **Flue/Vent Pipe Connections**
  - All connections shall be secure.
  - Single-wall pipe connections shall be mechanically secured with three evenly-spaced sheet metal screws when:
- New components are installed.
- Existing connections are found to be loose/unsafe.
  - Double-wall pipes shall not be drilled or have screws installed, *except* as permitted/specified by the manufacturer.

29. COMBUSTION AIR

- **Adequate combustion air shall be available to the furnace in accordance with Item 9.**
- **Combustion air for open combustion appliances shall be isolated from FAU return air in accordance with Item 10.**

30. BLOWER SECTION

- **The following conditions shall be corrected as needed to ensure proper operation of the unit:**
  - Dirty blower chamber and/or fan blades.
  - Evidence of loose or unsafe wiring.
  - Bearings in need of lubrication.

31. EVAPORATOR SECTION

- **Evaporator coil shall be clean.**
- **Plumbing and wiring penetrations shall be sealed with cork tape.**

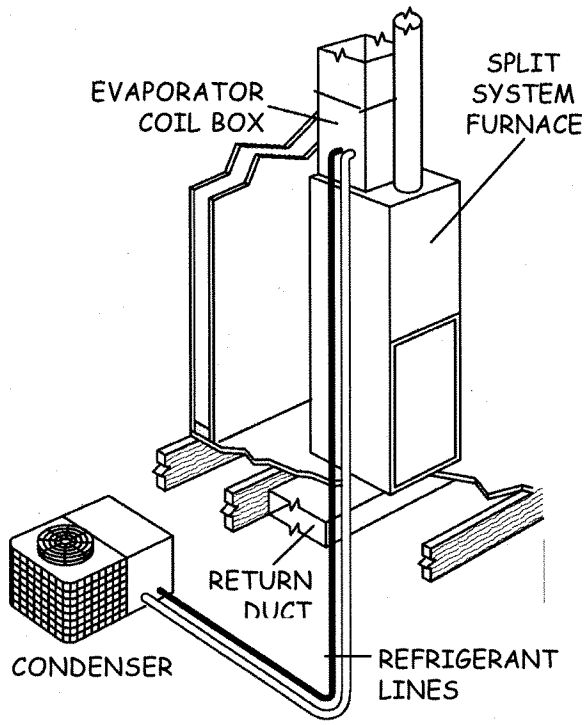

32. BURNERS

- **The furnace shall be checked for evidence of combustion problems, such as the following, and necessary corrections shall be made.**
- **Burner Performance**
  - When the burner(s) ignite, checks shall be made for:
- Delayed ignition.
- Excessive roll-out.
  - Burner(s) shall be examined for flame abnormalities, including:
- Large yellow flame (more than 50% yellow).
- Soft lazy flame or smothering flame.
- **Carbon and Rust**
  - The top of the burner(s), the heat exchanger, draft hood and flue/vent pipe shall be examined for excessive amounts of carbon or rust.
- **Burners and Venturies**
  - Shall be clean, and ports shall be unobstructed.
  - Burners shall be correctly aligned/positioned.
- **Burner Operation**
  - Air shutters shall be clean and adjusted for correct air/gas mixture.
  - Gas pressure shall comply with manufacturer's specifications.
  - Burner shall <u>not</u> be under- or over-fired.
- **Carbon Monoxide**
  - CO in flue gas shall be within limits specified by:
- Manufacturer's instructions, and
- LIEE WIS Section 1, NGAT.

33. APPLIANCE DRAFT

- **Open Combustion Natural Draft Furnaces**
  - Drafting shall be checked and verified to be acceptable, utilizing a Visual/Smoke Draft Test in accordance with WIS Section 1.

[GRAPHIC TEMPORARILY MOVED TO NEXT PAGE]

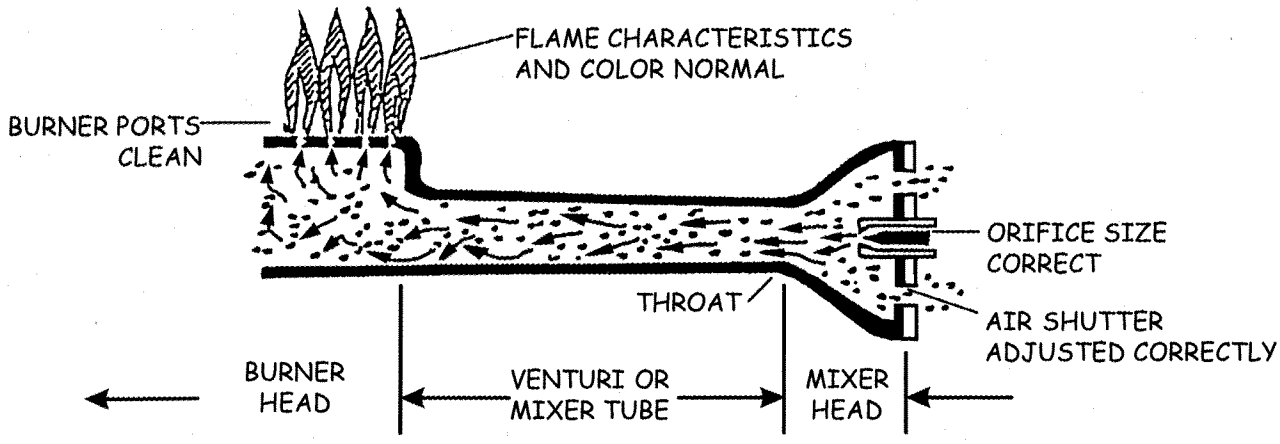
FLAME CHARACTERISTICS
AND COLOR NORMAL
BURNER PORTS
CLEAN
ORIFICE SIZE
CORRECT
THROAT
AIR SHUTTER
ADJUSTED CORRECTLY
BURNER
HEAD
VENTURI OR
MIXER TUBE
MIXER
HEAD

PART 5: NEW AIR CONDITIONER INSTALLATION WHEN COMBINED HEATING AND AIR CONDITIONING SYSTEM IS REPLACED

34. SIZING CRITERIA

- **System Size**
  - Unit shall be properly sized in accordance with Title 24, HCD requirements, or local code, whichever is most stringent.
  - The tonnage of the new system should be equal to or smaller than the existing system.
- **Refrigerant Lines**
  - Shall be properly sized per manufacturer's specifications.
  - Shall provide the rated EER for the combination condenser and evaporator coil match.

35. EVAPORATOR (INDOOR) COIL AND CONDENSER (OUTDOOR) COIL

- **Split Systems**
  - An evaporator coil shall be installed which is verified to be a rated match with the condenser unit, as listed in current ARI Directory.
  - The coil label shall be visible.
  - Condenser coil and evaporator coil shall be verified to function properly.
  - An access panel shall be provided for cleaning.
- **Evaporator Coil Replacement**
  - Prior to charging, vacuum shall be drawn on the refrigerant lines to test for leaks and remove water vapor.
  - Depth of vacuum and length of time shall be as specified by the manufacturer.

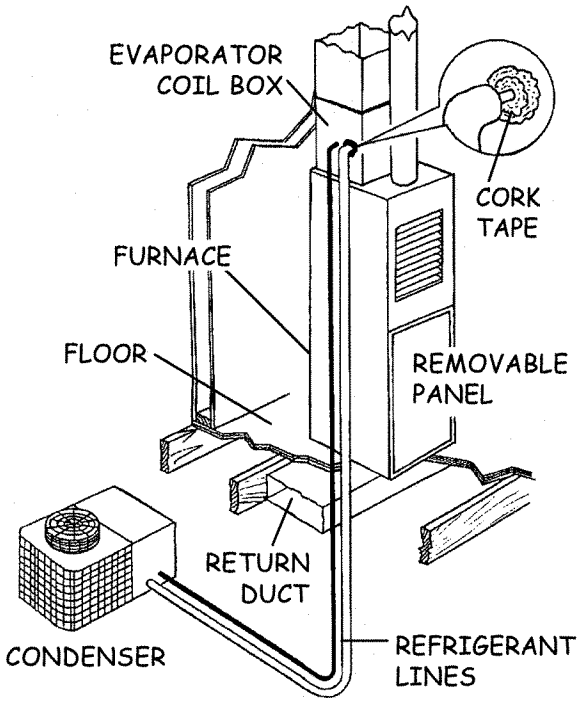

36. OPERATIONAL REQUIREMENTS

- **Air Flow**
  - Air flow through the indoor coil shall be adequate to meet manufacturer's specifications.
- **Refrigerant System Charging**
  - Refrigerant system shall be properly charged using methods specified by the manufacturer.
  - Refrigerant recovery shall be performed in accordance with Federal law.
- A recovery device shall be used.
- Ventilation to the atmosphere is not allowed.
  - Technicians performing evacuation and charging must have EPA-approved certification as a Type II or Universal technician.

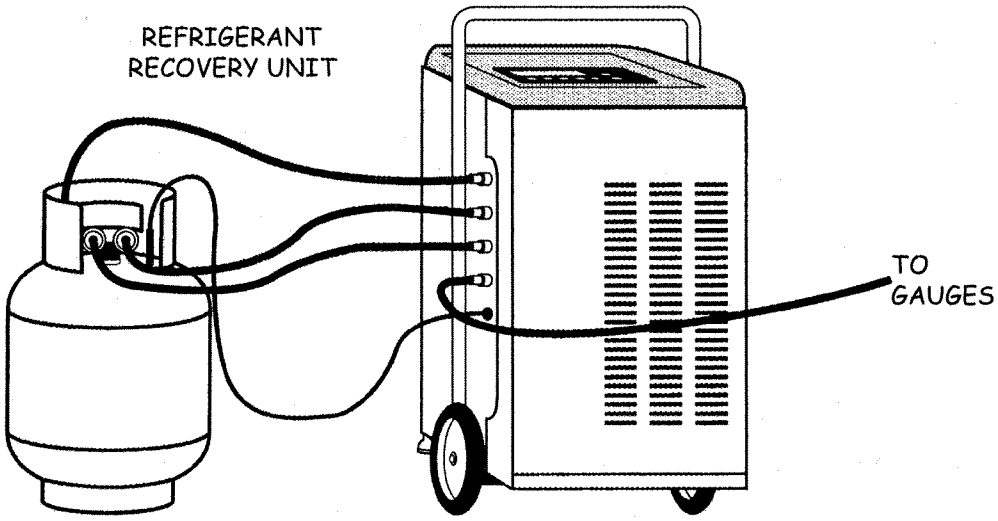

37. AIR DISTRIBUTION SYSTEM

- **Existing Duct System**
  - System shall be examined for leaks and disconnections and repaired as needed in accordance with the program Policy and Procedures.
  - Testing shall be performed in accordance with WIS Section 11, Duct Testing Standards, and duct repairs and sealing shall be made in accordance with WIS Section 17, Duct Sealing Standards.
- **Return System**
  - Belly-Cavity and Roof-Cavity Returns
- In accordance with the program Policy and Procedures:
    - Existing belly-cavity return shall be abandoned, and a new ducted central return shall be installed.
    - Existing leaky roof-cavity return shall be repaired as applicable, and replaced with a new central return when repair is needed but not feasible.
  - New central return shall be designed and installed in conformance with WIS Section 17 and HCD requirements.
- **Cabinet and Plenum**
  - Components shall be mechanically attached and sealed around the perimeter (cabinet-to-duct connector, cabinet-to-plenum) using materials and methods prescribed in WIS Section 17.
  - Plumbing and wiring penetrations into the evaporator coil box and return air chamber shall be sealed with cork tape.
- **New Ductwork**
  - Components shall be installed in conformance with manufacturer's instructions

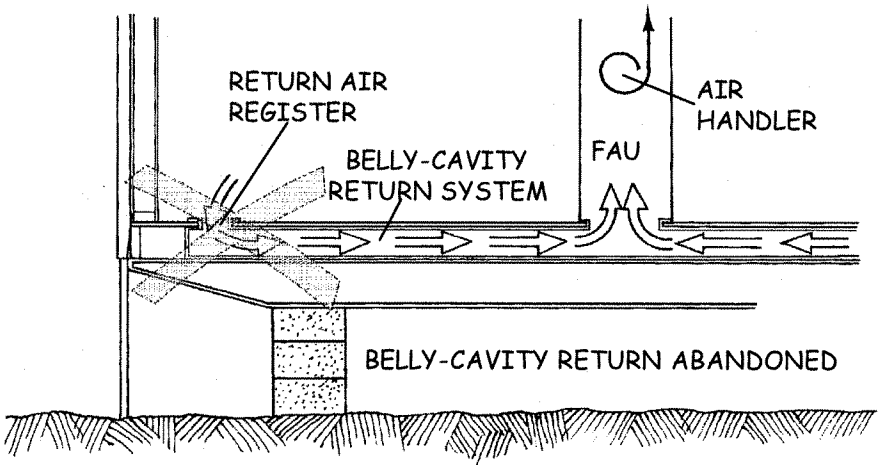

38. SELF-CONTAINED AIR CONDITIONERS

- **Installation of a self-contained air conditioner sharing a common supply duct system with the furnace shall comply with the following requirements:**
  - Automatic Dampers
- Furnace shall have an automatic damper installed to prevent cold air from entering the furnace when the HVAC system is in cooling mode.
- Air conditioner shall have an automatic damper installed to prevent hot air from entering the air conditioning unit when the HVAC system is in heating mode.
  - Function Control
- Controls shall prevent the air conditioner and furnace from coming on at the same time.

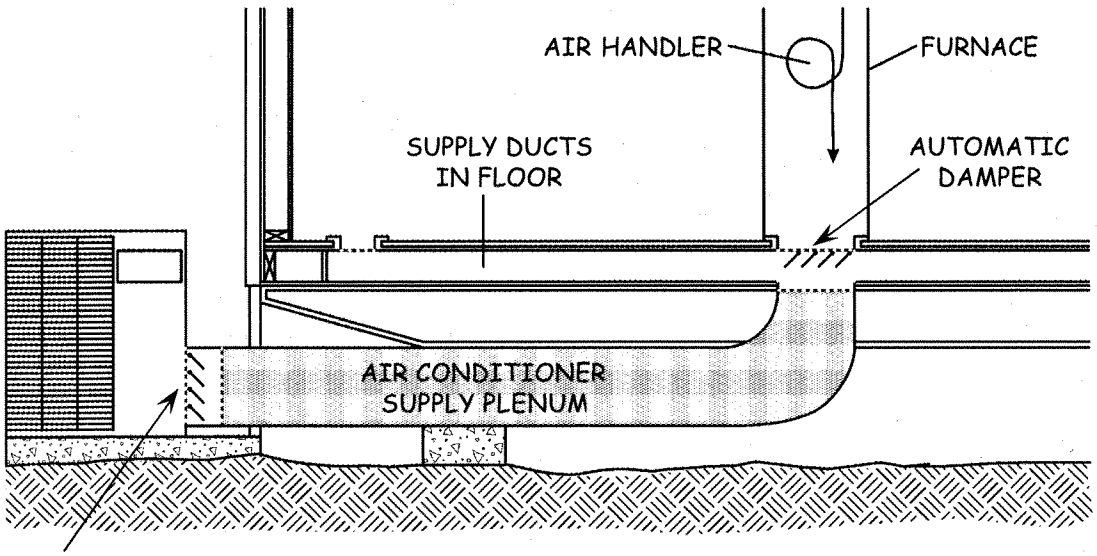

SELF-CONTAINED AIR CONDITIONER
WITH SIDE-BY-SIDE SUPPLY & RETURN PLENUMS

39. ELECTRICAL WIRING, GROUNDING, AND ACCESSIBILITY

- **Electrical wiring, grounding, and unit accessibility shall be in conformance with:**
  - Manufacturer's instructions,
  - HUD MHCSS, Section 3280, Subpart I, and/or as applicable
  - Requirements of the local building department.

40. UNIT DISCONNECTING MEANS (SERVICE DISCONNECT)

- **Outdoor Installations (Split System Condenser or Self-Contained Air Conditioner)**
  - A disconnecting means which is capable of disconnecting the air-conditioning equipment from the circuit feeder shall be installed in conformance with NEC Article 440, Part B, Disconnecting Means.
- **Location**
  - The service disconnect:
- Shall be located within sight from and readily accessible from the air-conditioning equipment or as required by the local jurisdiction.
- May be installed on or within the air-conditioning equipment.
- **Rating**
  - The rating of the installed fuses or circuit breakers shall <u>not</u> exceed:
- The overcurrent rating of the installed air-conditioning equipment.
- The rating of the box in which they are located.

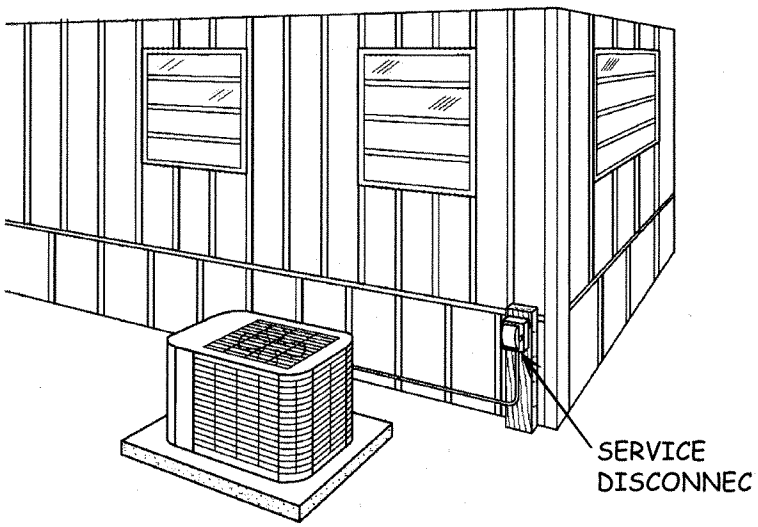

SPLIT SYSTEM REPLACEMENT CONDENSER UNIT

41. BRANCH-CIRCUIT PROTECTION

- **General Requirements**
  - Air-conditioning equipment shall be provided with:
- Overcurrent protection per NEC Article 240.
- Disconnecting means per NEC Article 440, Part B.
- Branch-circuit short-circuit and ground-fault protection per NEC Article 440, Part C.
- **Protection Device Type**
  - The overcurrent protection device shall be the type specified on the air-conditioning equipment nameplate (see Table 21-1).
  - When nameplate specifies an HACR circuit breaker, the installed circuit breaker shall be listed and labeled HACR type (suitable for use with heating, air-conditioning and refrigeration equipment).
- **Protection Device Rating**
  - The branch-circuit protection device shall not exceed the maxi-mum amperage rating specified on the nameplate of the air-conditioning unit.

TABLE 18-1: OVERCURRENT PROTECTION SELECTION GUIDE

HEAT PUMP UNIT NAMEPLATE MARKED:	OVERCURRENT PROTECTION DEVICE* MUST BE:
"Maximum Fuse Size _X_ Amps"	An _X_ Amp Fuse
"Maximum Fuse or HACR Circuit Breaker _X_ Amps"	An _X_ Amp Fuse or HACR-Type Circuit Breaker
"Maximum Fuse, HACR Circuit Breaker, or Circuit Breaker _X_ Amps"	An _X_ Amp Fuse, HACR-Type Circuit Breaker, or Standard Circuit Breaker
"Maximum Overcurrent Protection Device _X_ Amps"	An _X_ Amp Fuse, HACR-Type Circuit Breaker, or Standard Circuit Breaker

***Amperage rating of the device must not exceed that specified on the nameplate.**

42. BRANCH CIRCUIT CONDUCTORS

- **Ampacity and Rating of Conductors**
  - Minimum wire size shall, as applicable, be:
- Selected from NEC Tables 310-16 through 310-19, or
- Calculated in accordance with NEC Section 310-15.
- **Voltage Drop and Wire Length**
  - Circuits shall be installed in conformance with NEC Section 210, Branch Circuits and Section 215, Feeders.
  - The voltage drop over the branch-circuit conductor should not exceed 2%. (See NEC Section 210-19(a) (Fine Print Note No. 4).)
  - In 240v circuits, the maximum conductor length should not exceed the values given in the Table 18-2.

TABLE 18-2: MAXIMUM LENGTH OF CIRCUIT (IN FEET)

WIRE SIZE	AMPACITY OF CIRCUIT			
AWG	15	20	30	40
12	160'	120'	–	–
10	250'	190'	130'	–
8	300'	225'	150'	115'

Notes:

- **The table is based on a 4.6v drop (230v X 2% = 4.6v).**
- **The table applies to non-plated (uncoated) solid wire copper conductors at 75°C (167°F) ambient temperature.**
- **For alternate conditions or conductors, use applicable CEC Tables (e.g., see Article 210, "Branch Circuits"; Article 215, "Feeders"; and Chapter 9, Table 8, "Conductor Properties").**

43. MOUNTING OF OUTDOOR EQUIPMENT

- **Ground Mount**
  - Air-conditioning equipment shall be installed in conformance with CMC Section 1106.0.
  - The unit shall rest on concrete or other approved base extending at least 3" above the adjoining ground level.
- **Protection**
  - Units subject to mechanical damage shall be protected in conformance with CMC Section 308.
  - Unit shall be attached to base with seismic straps, when required by applicable code.
- **Overhead Clearance**
  - Overhead clearance shall be provided in conformance with manufacturer's specifications and local code.

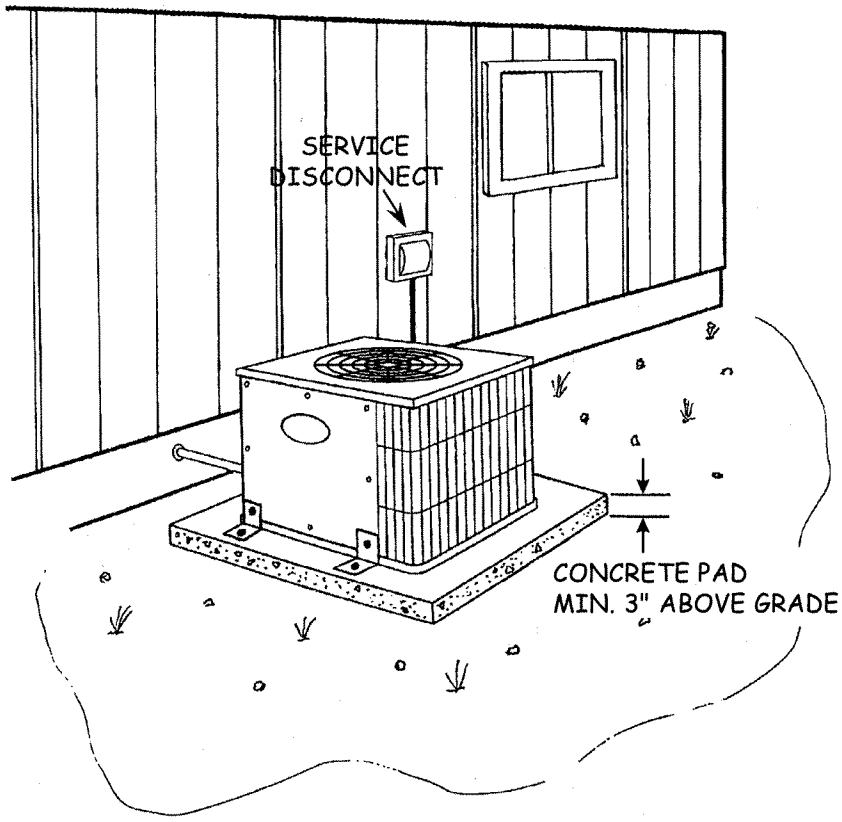

44. FUEL-GAS PIPING

- **All Installations**
  - Gas lines, fittings and valves shall be free of leaks.
  - New lines shall be pressure-tested.

45. COMBUSTION APPLIANCE REQUIREMENTS

- **Flue and Vent Systems**
  - New flue/vent system shall be selected, installed and secured in conformance with listing specifications, manufacturer's instructions, and HCD requirements.
- **Combustion Air**
  - Combustion air for installed units, and all other appliances sharing the same space/enclosure, shall be supplied in conformance with manufacturer's instructions and HCD requirements.
  - Combustion air vents shall be free of obstructions that interfere with proper venting.

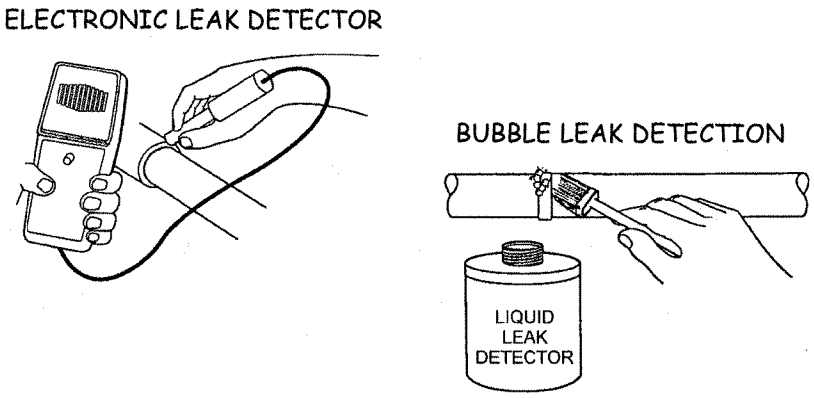

METHODS FOR FINDING LEAKS IN GAS LINES, FITTINGS, AND VALVES

PART 6: WALL THERMOSTAT INSTALLATION

46. THERMOSTAT INSTALLATION

- **Location and Mounting**
  - New thermostat shall be installed at existing location unless:
    - Affected by drafts, heat from direct sun, or adjacent appliances.
    - Relocation is needed to resolve short-cycling problems.
  - Thermostat installed in a new location:
- Shall be mounted with the top of thermostat 60" above the floor when occupants are not handicapped.
- May me installed as low as 48" above the floor when an occupant uses a wheelchair.
  - Thermostat shall be located away from direct sunlight, doors, windows, return/supply air, appliances, and sources of electrical interference.
  - Mounting bracket shall be securely attached to wall with screws for wood, or appropriate anchors for drywall and plaster.
  - Any holes or damage to wall from installation or removal of thermostat shall be repaired in a workmanlike manner.
- **Wiring**
  - All wiring shall be a minimum of 18 gauge and conform to manufacturer's specifications and HCD requirements.
  - Exposed wiring shall be enclosed in a raceway.

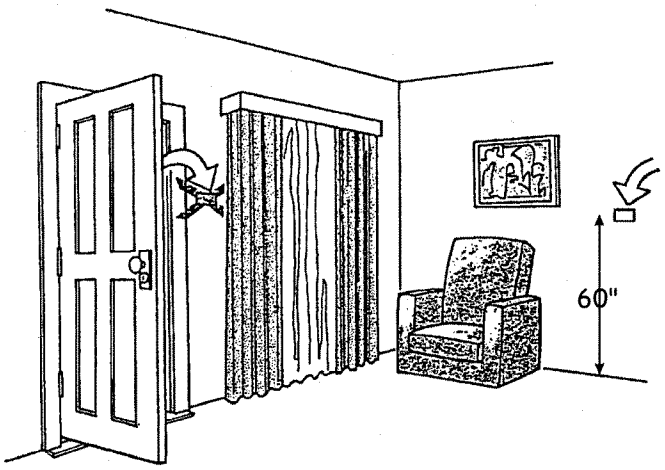

46. THERMOSTAT INSTALLATION (continued)

- **Programming and Operation**
  - Thermostat shall be cycled to insure proper operation of all functions.
  - Setbacks shall be programmed in accordance with customer's wishes.
- **Instructions and Warranty**
  - Customer shall be provided with:
- A demonstration with verbal instructions for operating the thermostat and installing batteries.
- The manufacturer's written instructions and warranty.

INSTRUCTIONS AND WARRANTY
PROVIDED TO CUSTOMER

PART 7: CENTRAL HEATING AND AIR CONDITIONER AIR FILTER INSTALLATION

47. HVAC UNITS

- **Reusable (Washable) Filters**
  - A reusable filter shall be installed when:
- A proper filter retaining device is available.
- Filter is not prohibited by the appliance manufacturer.
  - Filters shall be sized, supported, and installed per Items 48 and 49.
- **1" Bonded fiber**
  - Filter shall be installed only on:
- Natural gas upflow furnaces equipped with air conditioning.
- Electric furnaces and heat pumps.
  - The air handler shall be rated by the manufacturer for a 1" filter.
  - The return shall accommodate a 1" filter, which can be properly secured with standard retainer.
- **1/2" Bonded Fiber and Foam**
  - 1/2" bonded fiber shall be installed on downflow units when:
- The return can accommodate the material.
- It can be properly secured with standard retainer.
  - Foam shall be installed when:
- The return will not accommodate 1/2" bonded fiber.
- Bonded fiber is prohibited by the manufacturer.

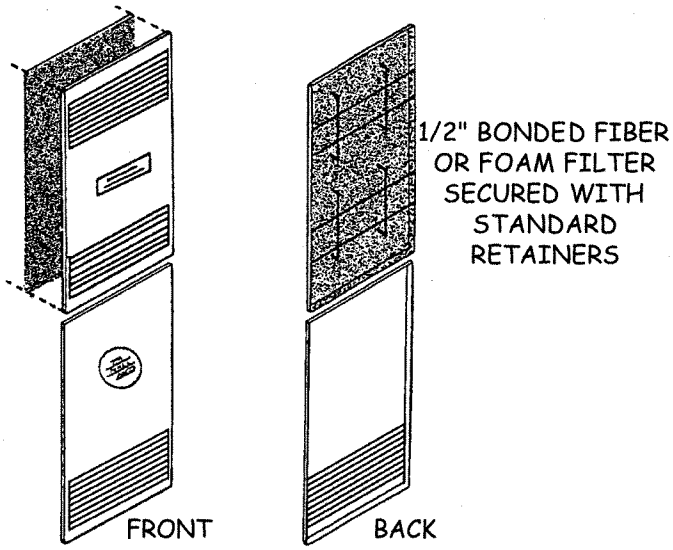

48. FILTER SIZE AND INSTALLATION

- **Size**
  - Unframed filters shall be cut for a snug fit with maximum 1/4" tolerance.
  - Framed filters shall fit within the filter housing without crimping or buckling.
- **Installation**
  - All filters shall be installed in conformance with appliance and filter manufacturer's instructions.
  - The coarse ("hairy") side of "hog hair" type bonded fiber filters shall always face the incoming air.

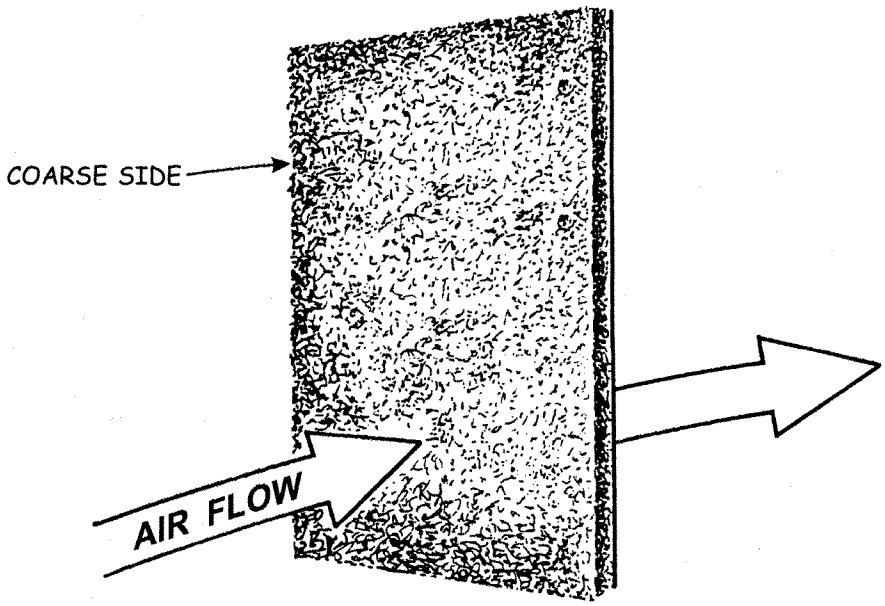

"HOG HAIR" TYPE
BONDED FIBER FILTER

49. UNFRAMED FILTER SUPPORTS

- **All Unframed Filters**
  - Unframed filters shall be supported, as needed, to prevent being drawn toward the air handler.
  - Manufacturer's instructions shall be followed.
- **1" Bonded Fiber Filters**
  - When not in conflict with appliance or filter manufacturer's instructions, steel rods (galvanized recommended) shall be internally installed, as needed, to stiffen filters over 20" long in either direction.
- Support rods shall be:
    - Adequate gauge to provide the necessary stiffness.
    - Spaced a maximum of 20" on center.
    - Sized to fully extend from one edge of the filter to the other.
    - Inserted into the coarse filter layer near the netting side of "hog hair" type.
    - Inserted in the center of the filter medium, or per manufacturer's instructions, for other types.
  - At least one rod shall be positioned so that both ends are supported by a solid surface.
- **Other Materials**
  - Materials thinner than 1" shall be secured externally.
  - Filters shall not be installed when adequate support cannot be provided.

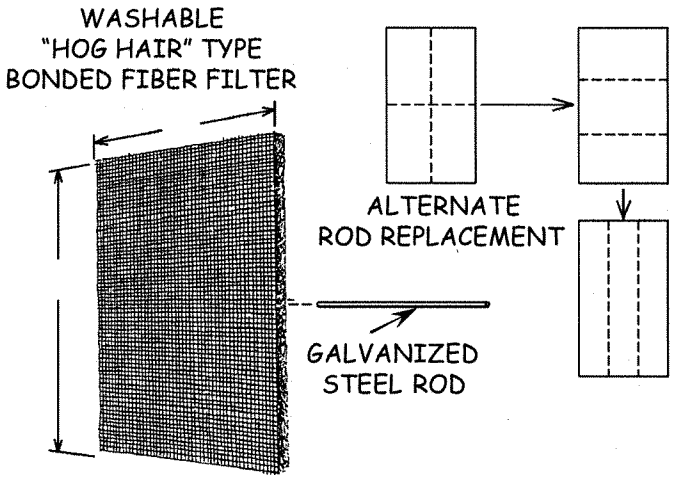

50. DUCTED HORIZONTAL AND VERTICAL 1" BONDED FIBER FILTERS

- **All Filters**
  - Filters shall be sized, supported, and installed per Items 48 and 49.
- **Unframed**
  - Internal support shall be installed as needed.
- **Framed**
  - Internal support not required.

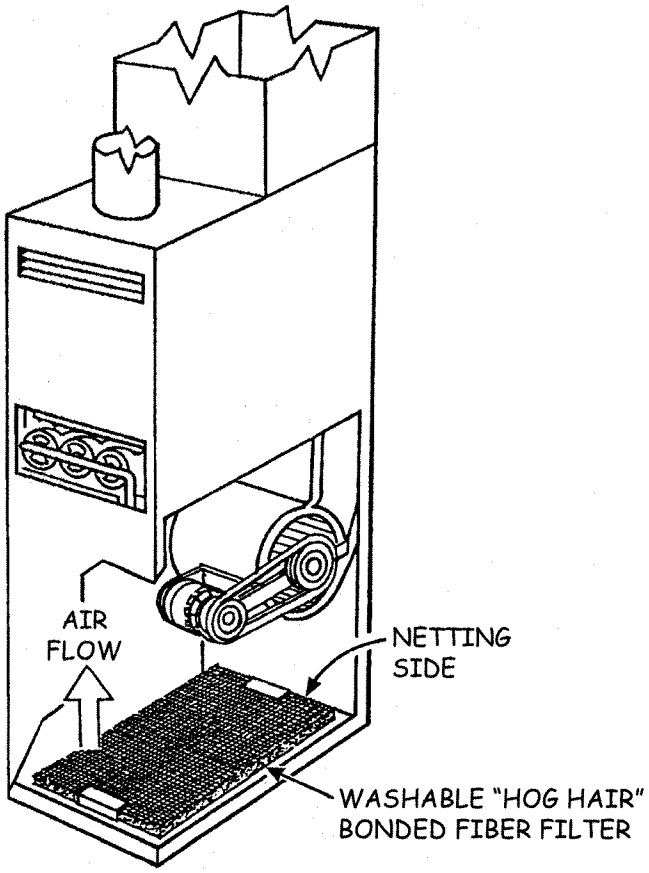

51. DUCTED RETURN INTAKES

- **All Filters**
  - Filters shall be sized, supported, and installed per Items 48 and 49.
- **Unframed**
  - Internal support shall be installed as needed.
- **Framed**
  - Internal support not required.

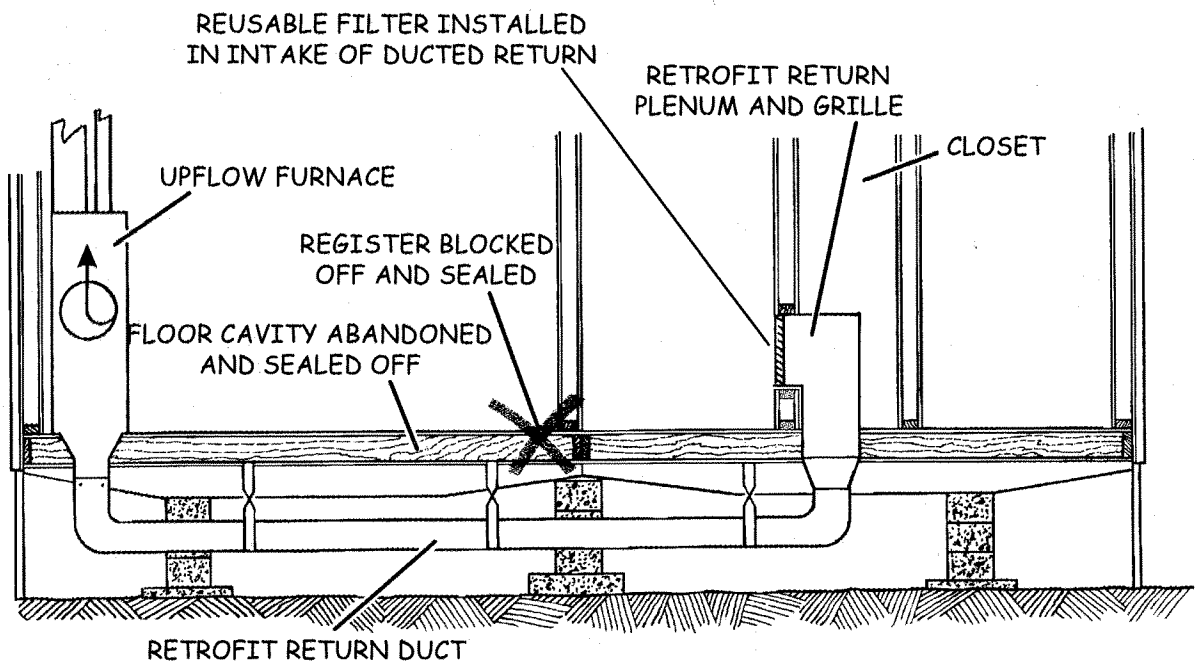

PART 8: POST-INSTALLATION/REPAIR

52. POST-INSTALLATION/REPAIR REQUIREMENTS

- **Appliance Operation**
  - The installed unit shall be tested for proper operation.
  - Proper operation shall be explained and demonstrated to the customer, including:
- Operation of all user-accessible controls.
- Filter replacement.
- Routine maintenance recommended by manufacturer.
  - Manufacturer's written instructions and warranty documents shall be supplied to the customer.
- **Cleanup and Disposal**
  - Paint dust and chips, scraps, and other debris resulting from weatherization activities shall be cleaned up and removed from the premises—utilizing lead-safe practices when applicable.
  - All packing materials and installation debris shall be cleaned up and removed from the premises.
  - All replaced equipment and parts shall be removed from the premises and properly disposed of unless specified otherwise in the home improvement contract.
  - Refrigerant shall be recovered and all hazardous waste materials shall be disposed of in conformance with federal, state and local codes.

EPA

STRATOSPHERIC OZONE INFORMATION

HOT LINE

800-296-1996

INFORMATION ABOUT HANDLING REFRIGERANT AND OTHER HAZARDOUS MATERIALS IS AVAILABLE FROM EPA'S STRATOSPHERIC OONE INFORMATION HOT LINE

SEE SEPARATE "NONFEASIBILITY CRITERIA" WORD DOCUMENT FOR THE NONFEASIBILITY PAGE TO THIS SECTION

DUCT SEALING STANDARDS

APPROVED MATERIALS

1. **ALL MATERIALS**
   - **Surface burning characteristics, per UL 723, ASTM E84, NFPA 255, or UL 2043:**
     - Flame spread rating not to exceed 25.
     - Smoke developed rating not to exceed 50.
   - **Only exterior-rated products shall be used outdoors.**
   - **UL 181A and 181B listed sealants shall be labeled per Table 17-1.**

2. **DUCT MASTIC**
   - **All Ducts**
     - Mastic shall be:
       - Non-toxic and water resistant.
       - UL listed and labeled per UL 181A or 181B standards.
   - **Flexible Metallic and Nonmetallic Ducts**
     - Mastic shall be:
       - UL labeled to include the marking "181B-M".
       - Compatible with the duct to which it is applied.
   - **Rigid Metal Ducts and Components**
     - Mastic shall be UL labeled "181A-M" or "181B-M".

TABLE 17-1: REQUIRED UL 181 IDENTIFICATION

DUCT TYPE	SEALING MATERIAL	UL IDENTIFICATION
RIGID METAL DUCTS AND COMPONENTS	PRESSURE SENSITIVE TAPE	MARKED "181A-P" OR "181A-P/181B-FX"
	HEAT ACTIVATED TAPE	MARKED "181A-H"
	MASTIC	LABELED "181A-M" OR "181A-M/181B-M"
FLEXIBLE DUCTS	PRESSURE SENSITIVE TAPE	MARKED "181B-FX" OR "181A-P/181B-FX"
	MASTIC	LABELED "181B-M" OR "181A-M/181B-M"

3. **MESH TAPE**
   - **All Ducts**
     - Mesh fabric used to reinforce duct mastic shall:
       - Comply with mastic manufacturer's instructions, or
       - Meet the following specifications:
         - Fiberglass mesh tape.
         - Weave per inch: 9 x 9 minimum.
         - Thickness: 0.006" minimum.
   - **Flexible Ducts and Rigid Metal Ducts**
     - Mesh tape width: 2" minimum.
   - **Rigid Fiberglass Ducts**
     - Mesh tape width: 3" minimum.

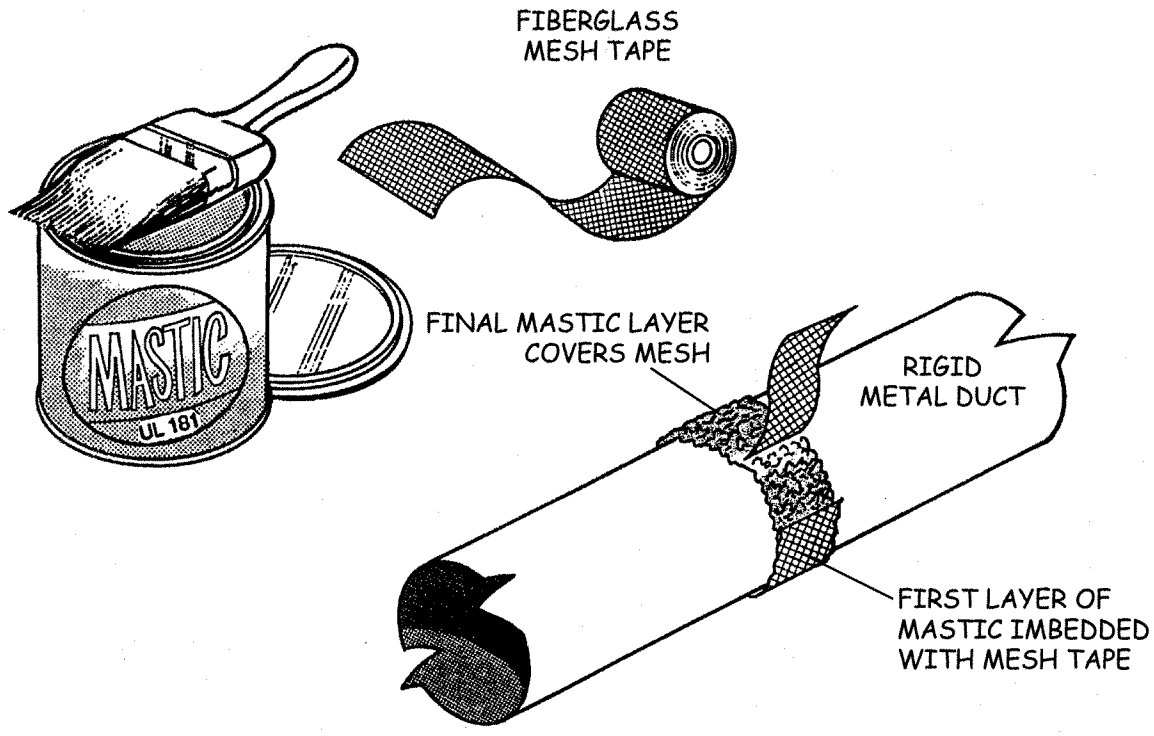

4. PRESSURE SENSITIVE TAPE

- **Approved Tapes**
  - Listed per UL 181A or 181B and marked "181A-P" or "181B-FX".
  - Metallic pressure sensitive tape: Aluminum foil backing.
  - Plastic pressure sensitive tape: Polypropylene or similar backing.
  - "Butyl Tape" (also known as "Foil Mastic"):
    - Aluminum foil tape with minimum 15 mil butyl adhesive.
    - Marked "UL 723" or "181B-FX".
    - Butyl tape without "181B-FX" marking shall not be used to seal flexible ducts.
- **Tapes Not Allowed: Cloth-back tapes, even if marked "181B-FX".**
- **Tapes for Sealing Flexible Nonmetallic and Flexible Metallic Ducts**
  - Tapes with markings that include "181B-FX", minimum 2" wide.
- **Tapes for Sealing Rigid Metal Ducts and components**
  - Metallic tapes marked "181A-P" and/or "181B-FX", min. 2" wide.
    - *Exception*: "Butyl tape" without "181A-P" or "181B-FX" markings may be used to seal rigid metal-to-metal connections.
- **Access Panels**
  - Metallic tapes with non-butyl (e.g., acrylic) adhesive.
- **High Temperature Applications**
  - Metallic tapes with non-butyl (e.g., acrylic) adhesive and service temperature rating of at least 265°F.

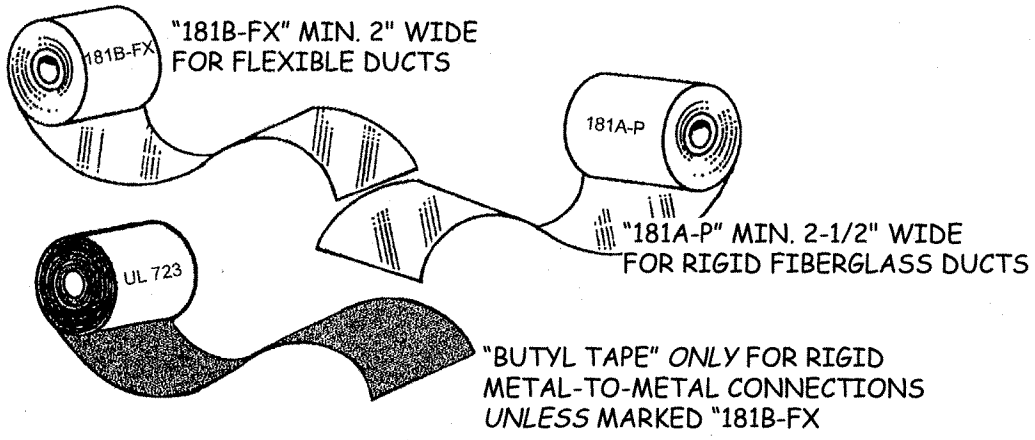

5. DRAWBANDS AND CLAMPS

- **Materials**
  - Drawbands and clamps used to secure flexible nonmetallic ducts shall comply with duct manufacturer's installation instructions.
  - Drawbands shall meet the following minimum standards:
    - Weather- and UV-resistant (e.g., black) nylon duct straps/ties rated for outdoor use.
    - Loop tensile strength: 150 pounds minimum.
    - Service temperature rating 165°F minimum.
  - Clamps shall be stainless steel worm-drive clamps.
- **Drawband Installation:**
  - Drawbands shall be tightened with an adjustable tensioning tool in accordance with duct manufacturer's instructions.

6. DUCT BOARD

- **High Density Fiberglass Duct Board**
  - Conformance to ASTM C726, or NFPA 90B, or UL Class 1.
- **Foam Board and Foam Sealant**
  - Not allowed as a barrier material in duct systems.

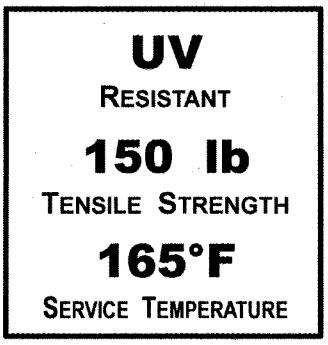

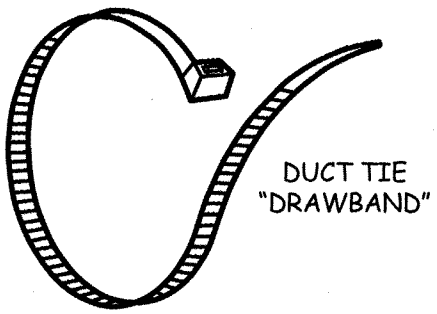

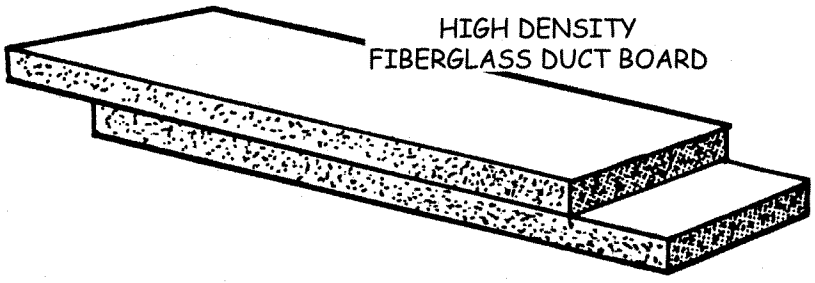

7. CAULKING MATERIALS

- **All Materials**
  - Shall be non-toxic.
  - Shall be selected and applied in accordance with Section 2.
- **Latex Sealing Compounds**
  - Conformance with ASTM C834.
- **Butyl Rubber Sealants**
  - Conformance with F.S. A-A-272A
- **Elastomeric Joint Sealants (Silicone, Polyurethane, Polysulfide)**
  - Conformance with ASTM C920 or F.S. A-A-1556A.

8. CORK TAPE

- **Shall be non-toxic.**
- **Shall be non-corrosive to copper.**
- **Elongation: 200% minimum.**
- **Hardening: 37% maximum.**

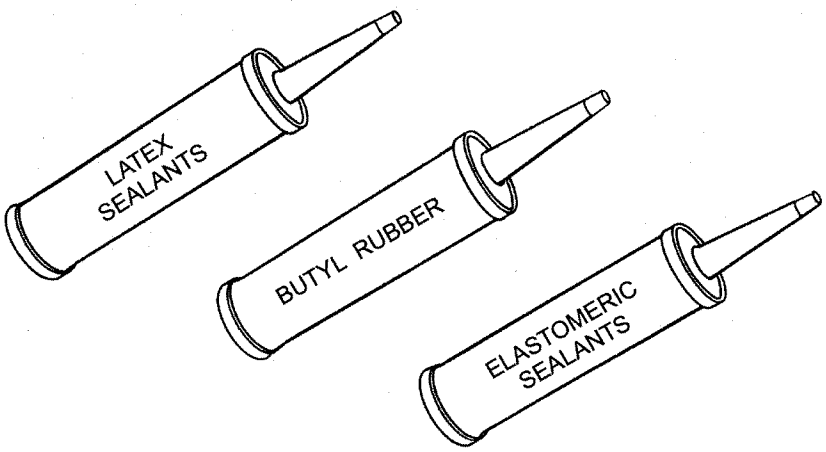

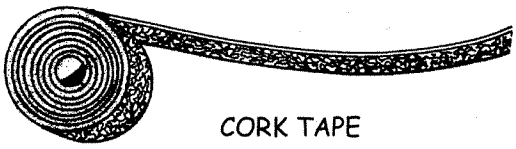

9. FLEXIBLE DUCTS

- **Flexible *Nonmetallic* Ducts**
  - In crawl spaces <u>not</u> accessible to animals, flexible ducts may be used to:
    - Replace damaged or deteriorated flexible ducts (e.g., crossover ducts).
    - Install a new ducted return system.
  - All ducts shall conform to NFPA-90B and UL-181 Class 1.
  - R-value shall be in conformance with Item 10.
  - Nonmetallic flexible duct core shall be fabricated with a with a spring steel helix bonded within nonporous material (e.g., molded composite or two-ply lamination of polyester).
  - Vapor barrier (jacket) shall:
    - Be rated for mobile home use, with HUD markings on the jacket.
    - Have a minimum thickness of 3.5 mils.
    - Have a maximum permeance of 1.0 perm.

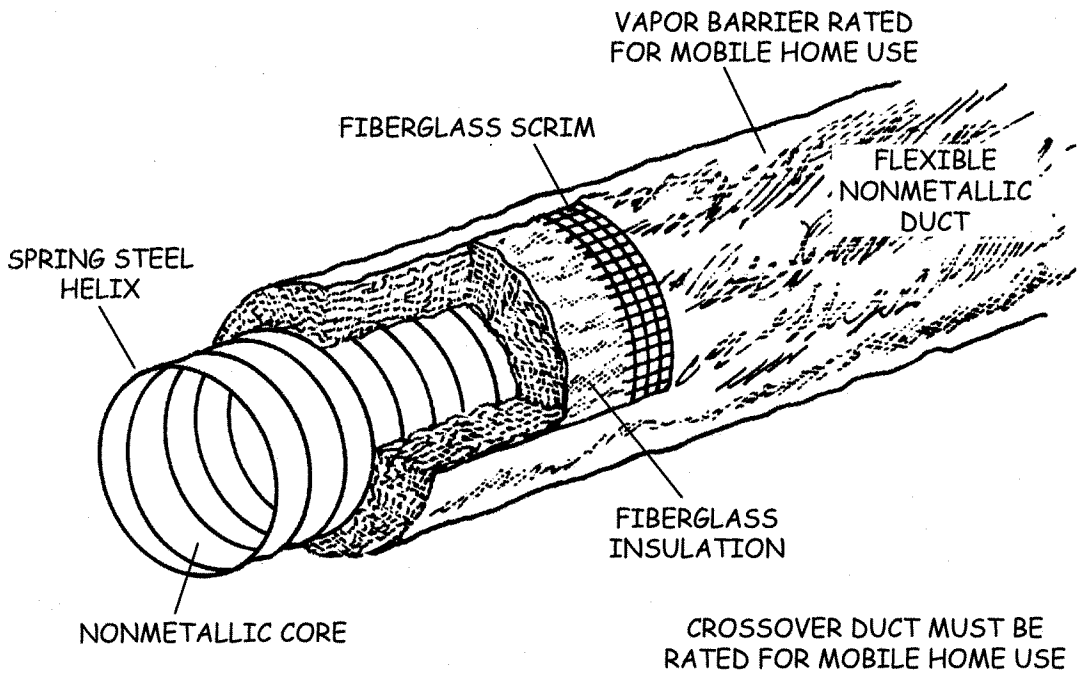

9. FLEXIBLE DUCTS (continued)

- **Flexible *Metallic* Ducts**
  - In crawl spaces not accessible to animals, flexible ducts may be used to:
    - Replace damaged or deteriorated flexible ducts (e.g., crossover ducts).
    - Install a new ducted return system.
  - All ducts shall conform to NFPA-90B and UL-181 Class 1.
  - R-value shall be in conformance with Item 10.
  - Metallic flexible duct core shall be fabricated from minimum 0.0065" thick aluminum material or equivalent.
  - Vapor barrier (jacket) shall:
    - Be rated for mobile home use, with HUD markings on the jacket.
    - Have a minimum thickness of 3.5 mils.
    - Have a maximum permeance of 1.0 perm.

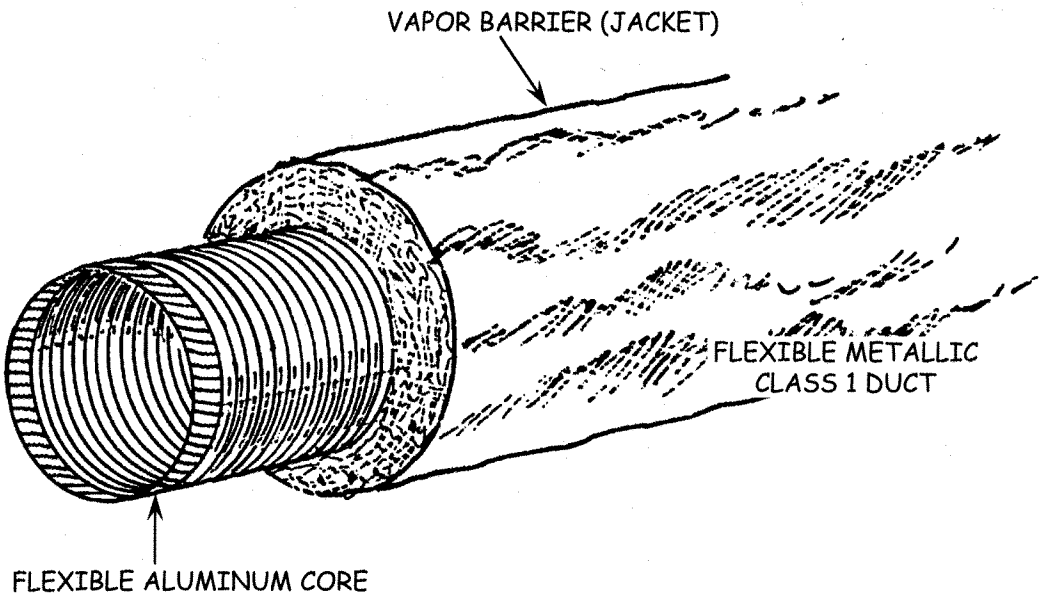

10. RIGID METAL DUCTS

- **Ductwork**
  - Shall conform to NFPA 90B and UL 181 Class 1 or Class 0.
  - Shall be constructed of noncorrosive material.
  - Rectangular metal ducts shall conform to CMC requirements.
  - Round metal ducts shall conform to minimum thickness requirements of the CMC, some of which are shown in Table 17-2.

11. DUCT INSULATION (R-VALUE)

- **R-value shall be as listed below, <u>or</u> as required by the authority having jurisdiction, whichever is greater.**
  - Ducts for Natural Gas Heat:
    - R-4.2 in CEC climate zones (CZ) 6 – 8.
    - R-6 in CZ 1 – 5 and 9 – 13.
    - R-8 in CZ 14 – 16.
  - Ducts for Electric Heat: R-8 in all CZ.

TABLE 17-2: MINIMUM GAGE OF ROUND METAL DUCTS

ROUND METAL DUCTS AT POSITIVE STATIC PRESSURE UP TO 2 IWG (500 PA)		
DIAMETER OF DUCT	MIN. SHEET GAGE (GALVANIZED STEEL)	MIN. B. & S. GAGE (ALUMINUM)
Up to 14"	26	24
15" to 23"	24	22
24" to 37"	22	20
38" to 51"	20	18

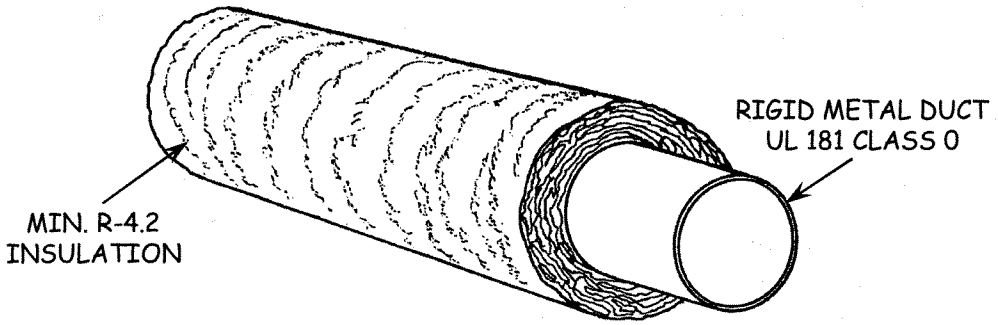

12. SHEET METAL

- **All Rigid Components**
  - Components shall be constructed of noncorrosive materials.
  - Fittings (starting collars, splicing sleeves/couplings, etc.) shall have wall thickness (gage) no thinner than specified for attached ducts (per Item 10 and Table 17-2).
- **New Fittings Used with Flexible <u>Nonmetallic Ducts</u>**
  - The following are minimum standards.
  - Starting Collars
    - 4" sleeve length (6" recommended).
    - 26 gage galvanized steel up to 14" diameter.
  - Splicing Sleeves
    - 6" length (8" recommended).
    - 26 gage galvanized steel up to 14" diameter.
  - All Fittings
    - Fittings shall be beaded at each core connection (e.g., both ends of a sleeve) when flexible nonmetallic ducts are attached.
      - *<u>Exception</u>:* When a preexisting fitting is not beaded, the core's wire coil shall be secured to the fitting as prescribed in Item 23.

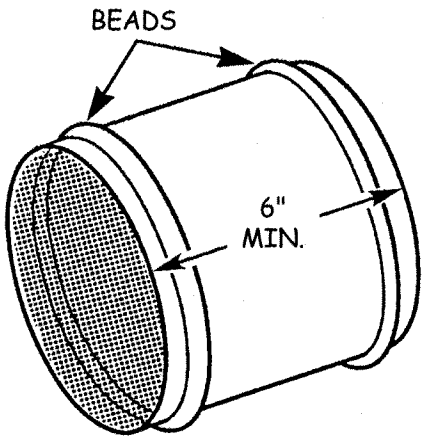

BEADED SLEEVE MINIMUM 6" LONG FOR FLEXIBLE NONMETALLIC DUCTS

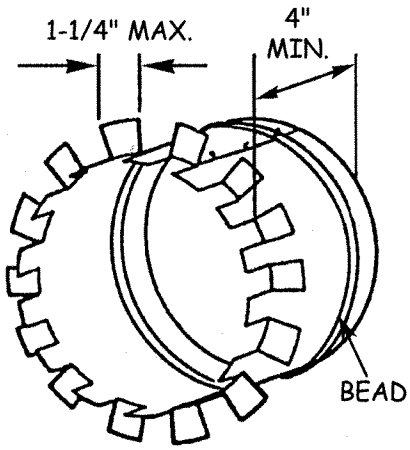

SHEET METAL COLLAR (DOVETAIL) MIN. 4" LONG AND BEADED FOR FLEXIBLE NONMETALLIC DUCTS

13. DUCT SUPPORTS

- **Flexible Ducts**
  - Nonmetallic Support Straps
    - Polypropylene monofilament, woven polyester, polyester scrim reinforced vinyl laminate, or equivalent.
      - Minimum width: 1-3/4".
      - Minimum tensile strength: 70 lbs./inch of width.
  - Sheet Metal Support Straps
    - Width: 1-1/2" minimum.
    - Thickness: 26 gage minimum.
- **Horizontal Rigid Round Metal Ducts**
  - Up to 10" Diameter
    - Galvanized steel straps, same gage as duct, 1" minimum width, or
    - 18 gage galvanized steel wire.
  - 11" to 40" Diameter
    - Galvanized steel straps, same gage as duct, 1" minimum width, or
    - 8 gage galvanized steel wire tied to a galvanized steel band, 1" minimum width, surrounding the duct.

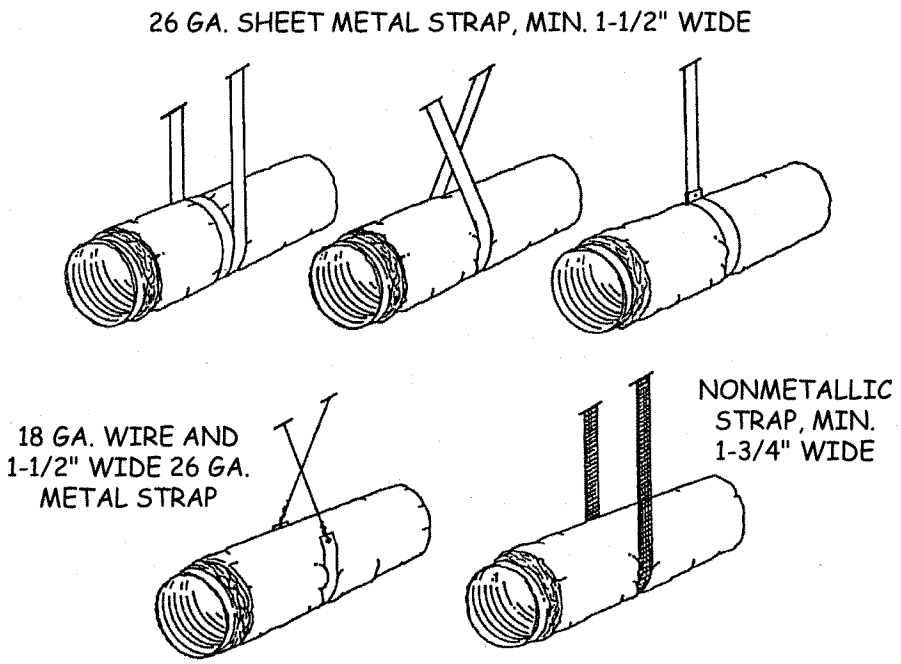

DUCT SYSTEM DIAGNOSTICS

14. DUCT SYSTEM INSPECTION AND ANALYSIS

- **Asbestos Caution**
  - When any part of a duct system is known or suspected to be made of or insulated with asbestos, no action shall be taken which will cause such material to be unencapsulated or discharged into the air.
- **Pre-Inspection**
  - Supply registers and return grilles shall be removed to facilitate system inspection and the performance of repair/sealing work.
  - A mirror and light shall be used to perform inspection of:
    - Joints and connections in the boot and riser.
    - Duct termination (dead end) at the register nearest the end of each duct run.
    - Each duct run to locate leaks, disconnections, and other defects.
    - Duct connector under furnace when accessible.
- **Post-Inspection**
  - Internal repair and sealing work (e.g., boot/riser-to-trunk connection) shall be inspected with a mirror to ensure that:
    - Sealants have been applied correctly, and
    - All leaks are completely sealed.

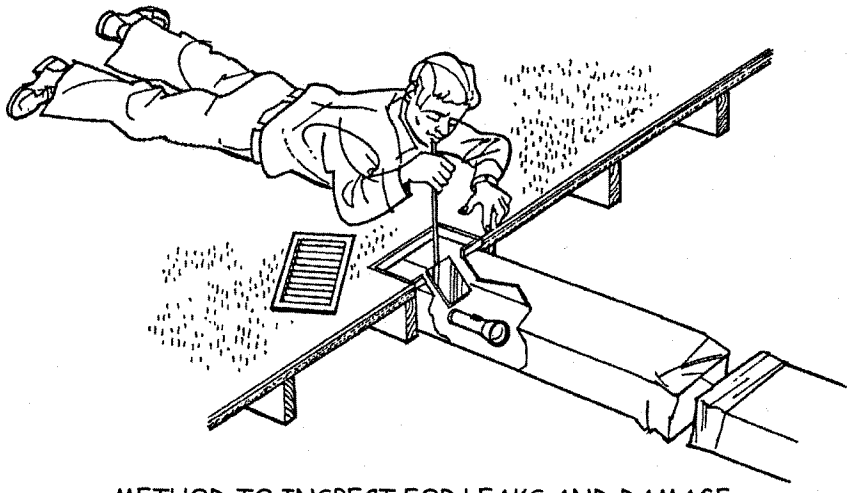

METHOD TO INSPECT FOR LEAKS AND DAMAGE
AND TO VIEW COMPLETED REPAIRS

14. DUCT SYSTEM INSPECTION AND ANALYSIS (continued)

- **Pressure Diagnostics**
  - When using a duct pressurization system (duct blaster):
    - Registers/grilles shall be sealed (e.g., with masking tape).
    - Duct tester shall be attached to the return grille nearest the FAU, or as instructed by the manufacturer.
    - Ducts shall be pressurized to 25 Pa (0.1 iwc).
    - Test shall be performed in accordance with manufacturer's instructions, with the result being the measured duct leakage.
  - Duct testing performed to determine whether duct sealing is feasible (initial leakage meets start criteria) and when to stop sealing (final leakage meets stop criteria) shall be performed as prescribed in Section 11, Duct Testing Standards.

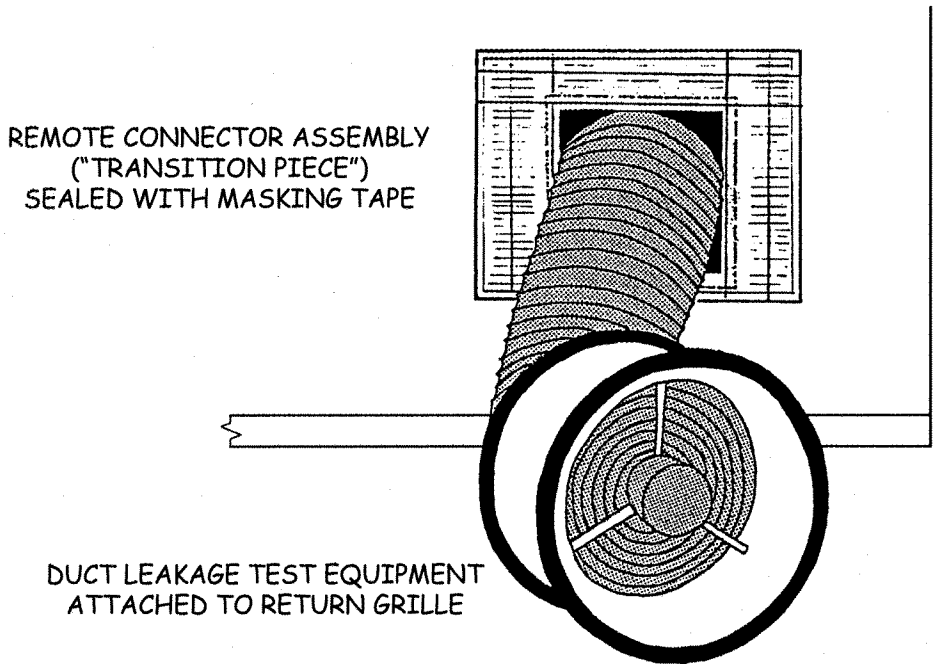

14. DUCT SYSTEM INSPECTION (continued)

- **Duct System Balance**
  - Duct systems shall be balanced to provide adequate air movement throughout the living space with interior doors closed.
  - Rooms closed off by doors from the FAU return intake shall be provided with an adequate return air path.
  - The required return air path for each room shall be provided by a permanent means, such as one of the following:
    - Uncloseable grilled or louvered venting in the door or wall.
    - An undercut door leading to the hallway.

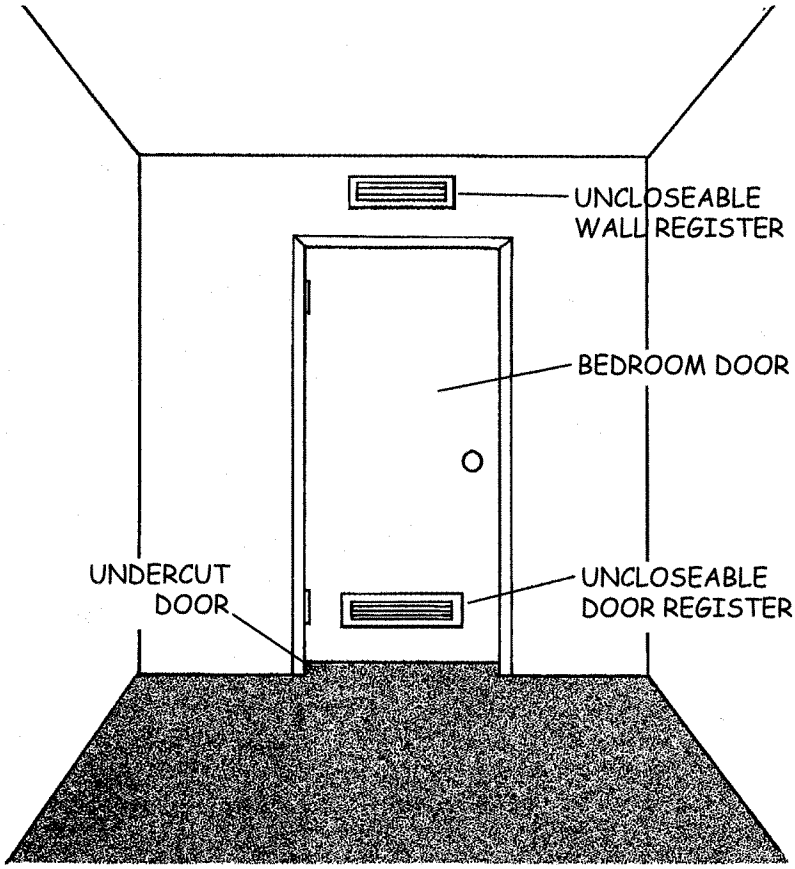

DUCT INSTALLATION

15. GENERAL INSTALLATION CRITERIA

- **New Replacement Ducts**
  - Ducts shall be sized, installed and connected as prescribed in this section and HUD MHCSS Part 3280.715 (also incorporated into the CCR as Title 25, Division 1, Chapter 3, Article 2, Subchapter 3).
- **Surface Preparation**
  - Preparation shall be in conformance with duct and sealant manufacturers' instructions.
  - Surfaces shall be:
    - Cleaned prior to application of tapes and sealants.
    - Free of dust, dirt, oil, grease, moisture and similar substances.
- **Air Handler Operation**
  - Air handler shall:
    - Be off during the application of all tapes and sealants.
    - Remain off for the drying time specified by sealant manufacturer.

16. DRAWBAND INSTALLATION

- **Drawbands used to secure flexible nonmetallic ducts shall be installed:**
  - In accordance with manufacturer's instructions.
  - Behind the bead when the fitting is beaded.
  - Tightened appropriately with an adjustable tensioning tool.
  - With the excess (tail) removed.
- **Stainless steel worm-drive clamps may also be used.**

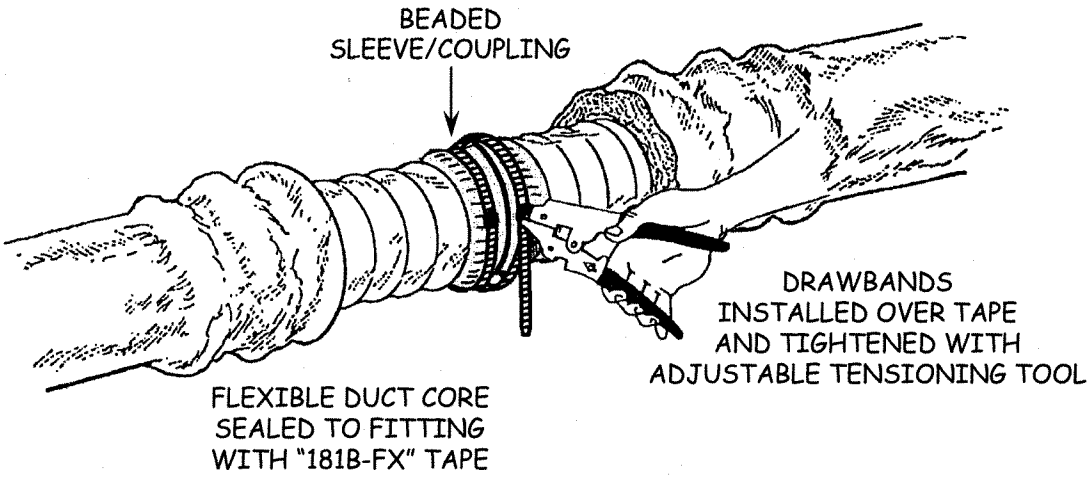

17. DUCT SUPPORT AND PROTECTION

- **All Types**
  - Ducts shall be installed and supported above the ground in conformance with manufacturer's instructions and applicable code.
- **Flexible**
  - Supports shall be spaced no more than 4' apart.
  - Maximum sag 1/2" per foot of spacing (total 2") between supports.
- **Rigid**
  - Shall not flex more than 1" between supports.
- **Hangers or Saddles**
  - 1-1/2" minimum width for flexible ducts.
- **Protection**
  - Shall be protected from animals.
  - Shall not be exposed to the weather.

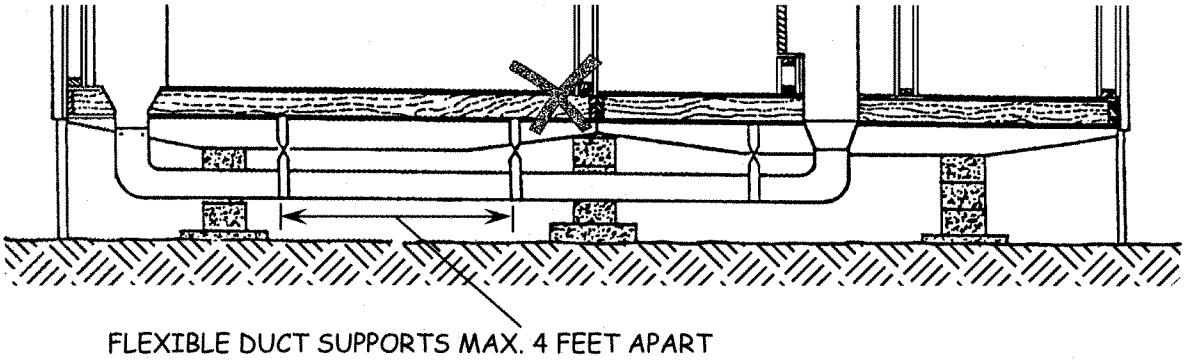

DUCT REPAIR AND SEALING

18. DUCT CLOSURE SYSTEMS

- **All Closure Systems**
  - Sealants shall be applied per manufacturer's instructions.
  - A complete, durable seal shall be achieved.
  - Pressure sensitive tapes shall be marked, and mastic containers shall be labeled, in conformance with:
    - UL 181B for flexible nonmetallic and metallic ducts.
    - UL 181A or 181B for rigid metal ducts and components.
      - *Exception:* Butyl tape without UL 181 markings may be used to seal rigid metal-to-metal connections.
- **Gap Size and Sealing Materials**
  - Sealing materials shall be selected in conformance with Table 17-3.
  - Flexible duct connections with gaps wider than 1/4" shall be replaced with properly-sized duct and/or fitting.
  - Rigid metal duct gaps 1" or wider shall be repaired per Item 26.

TABLE 17-3: GAP SIZE AND APPROVED SEALING MATERIALS

GAP SIZE	FLEXIBLE METALLIC & NONMETALLIC DUCTS		RIGID METAL DUCT	
	Sealing with MASTIC	Sealing with TAPE	Sealing with MASTIC	Sealing with TAPE
≤ 1/4"	Mastic	Tape	Mastic	Tape
> 1/4" - < 1"	Repair Required*	Repair Required*	Mastic & Mesh	Mastic over Tape
1" or more	Repair Required*	Repair Required*	Metal Patch or Sleeve & Mastic	Metal Patch or Sleeve & Tape

***Duct and/or fitting must be replaced with proper size.**

18. DUCT CLOSURE SYSTEMS (continued)

- **Externally-Applied Closure Systems**
  - Sealing materials shall:
    - Be centered over the joint or gap, and
    - Extend at least 1" onto each of the two joined/sealed surfaces.
- **Internally-Placed Mastic Sealant (Core-to-Fitting Joints)**
  - Mastic may be applied either:
    - Inside the duct core, <u>or</u>
    - Onto the rigid component over which the core is attached.
  - Mastic coating shall be at least 1/8" thick and 2" wide.
- **Sealing with Mastic and with Pressure Sensitive Tape**
  - Mastic and Fiberglass Mesh Tape
    - Mastic and mesh shall be installed as prescribed in Item 19.
  - Pressure Sensitive Tapes
    - Tape shall be installed as prescribed in Item 20.

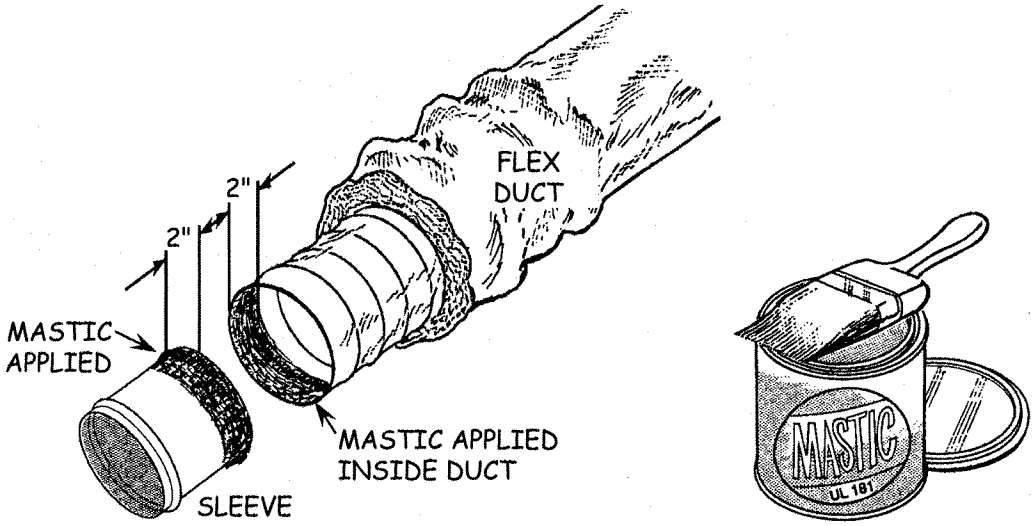

19. SEALING WITH MASTIC

- **Mastic shall be applied as prescribed by manufacturer, including:**
  - Surface preparation/cleaning.
  - Temperature and moisture limitations.
  - Thickness and set-up time.
- **Rigid Metal Ducts and Components**
  - Mastic by itself may be used to seal gaps up to 1/4".
  - Mastic shall be reinforced with fiberglass mesh tape when used to seal gaps larger than 1/4".
  - Gaps 1" or wider shall be repaired and sealed with sheet metal, screws, and sealant (tape, mastic, elastomeric caulk).
- **Flexible Metallic and Nonmetallic Ducts**
  - Mastic used to seal core-to-fitting connections may be:
    - Externally applied over the duct core and rigid fitting, <u>or</u>
    - Internally placed between the core and the fitting.
  - Externally-Applied Mastic
    - Mastic shall be reinforced with fiberglass mesh tape when mastic is used to seal the jacket (vapor barrier).
    - When a gap greater than 1/4" exists between the duct core and the fitting (starting collar, coupling, elbow, wye, etc.), duct and/or fitting must be replaced with the proper size (see item 18).

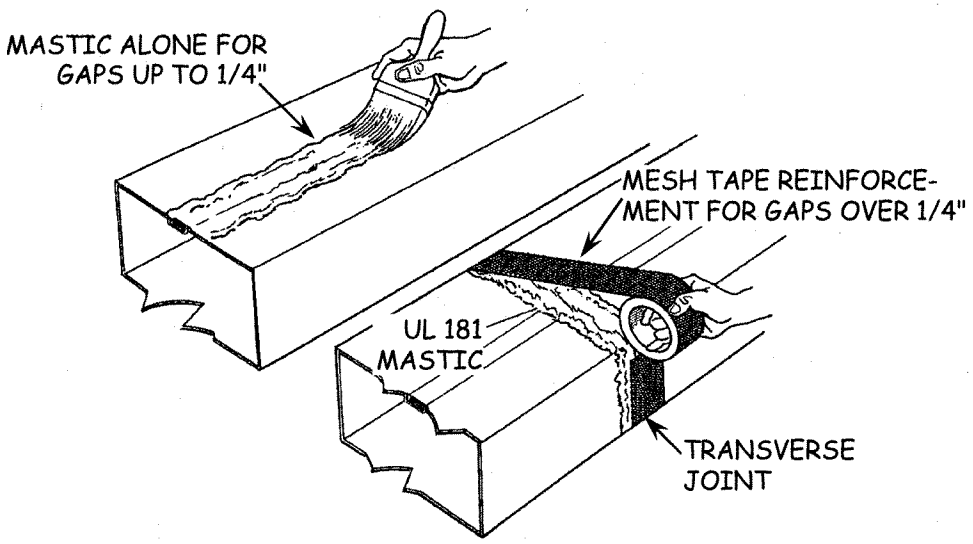

19. SEALING WITH MASTIC (continued)

- **Reinforcement of Mastic with Fiberglass Mesh Tape**
  - Mesh fabric shall be imbedded between two layers of duct mastic to form a mastic closure system.
    - The first layer of mastic shall:
      - Be centered over the joint or gap to be sealed.
      - Extend at least 1" onto each of the joined surfaces.
      - Extend beyond the width of the mesh.
    - The mesh fabric shall be:
      - Embedded in the mastic.
      - Applied at least one layer thick over the entire joint or gap.
      - Wrapped around the entire circumference on transverse joints (e.g., where two sections of duct are joined together).
    - A second layer of mastic shall be installed over the mesh, filling the scrim pattern completely and covering the mesh.

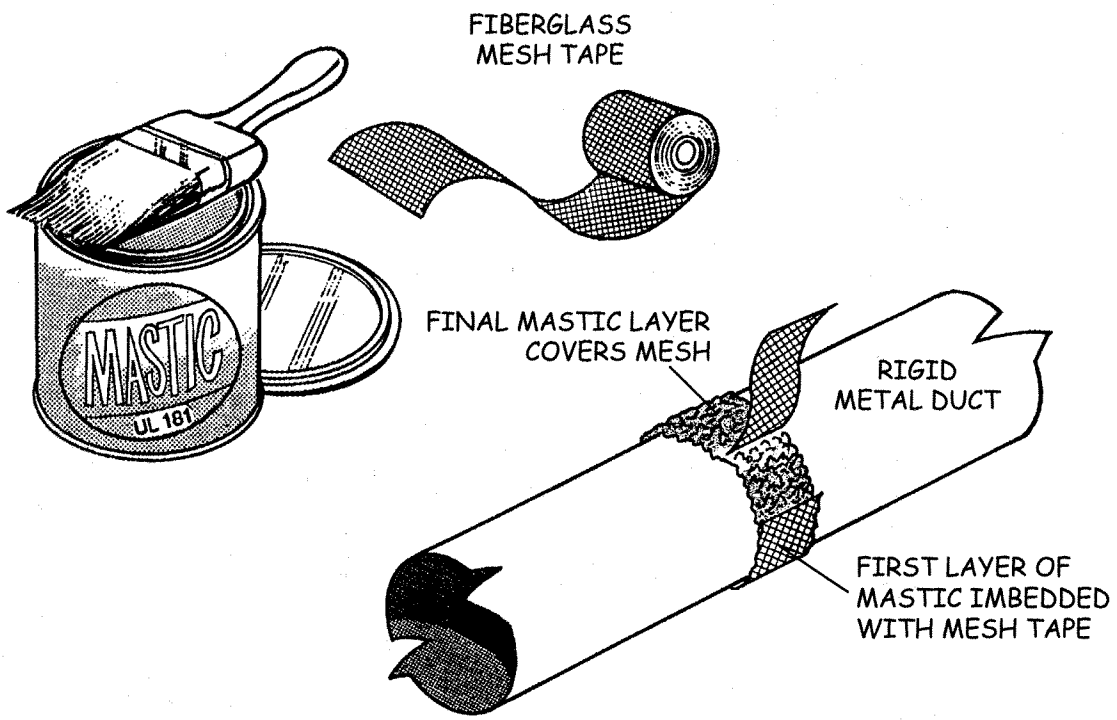

20. SEALING WITH PRESSURE SENSITIVE TAPE

- **All Pressure Sensitive Tapes**
  - Tapes shall be installed as prescribed by manufacturer, including:
    - Surface preparation/cleaning.
    - Application of pressure/rubbing.
    - Temperature and moisture limitations.
  - Successive wraps of tape shall be staggered and should overlap by 50 to 75% of the tape width.
  - At least 3 wraps of tape shall be applied when sealing:
    - Transverse joints at splices and connections in round or rectangular metal ducts.
    - Flexible duct core-to-fitting attachments (with a drawband also installed to secure the core).
    - Jacket (vapor barrier) splices on flexible ducts.
  - When gaps over 1/4" up to <1" wide are sealed with tape:
    - Tape shall be applied as prescribed above and then covered with duct mastic.
    - The mastic shall be applied at least 1/8" thick over the installed tape to provide additional strength and durability.
    - Mastic shall extend beyond the width of the tape.
  - Gaps 1" or wider shall be repaired and sealed per Item 19.

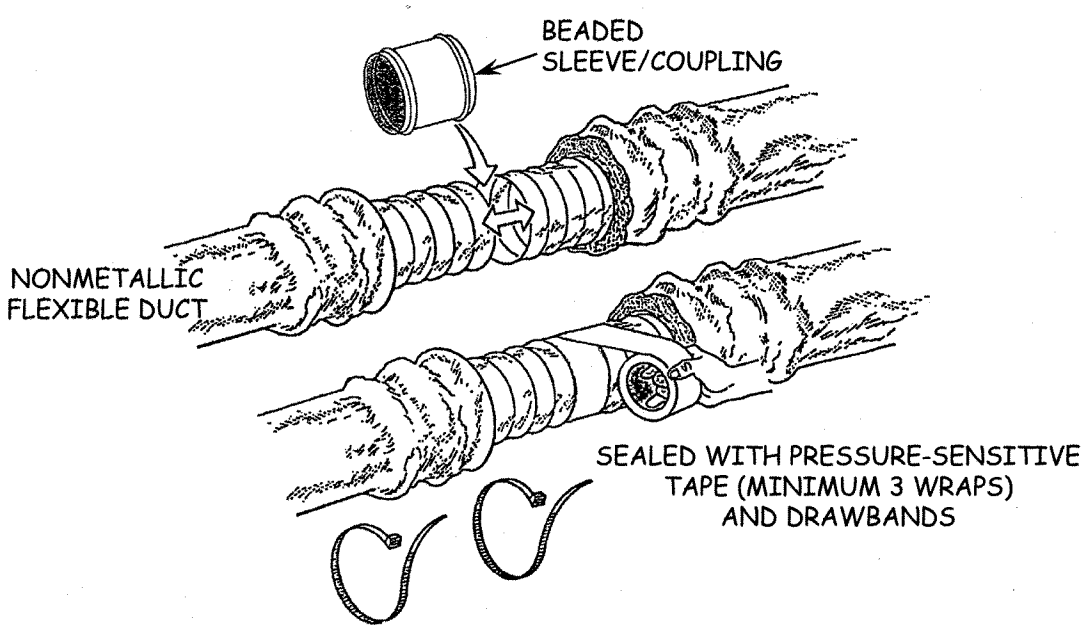

20. SEALING WITH PRESSURE SENSITIVE TAPE (continued)

- **Tapes for Rigid Metal Connections**
  - Metallic pressure sensitive tapes shall be used.
- **Tapes for High Temperature Applications**
  - Metallic pressure sensitive tape with a service temperature rating of at least 265°F shall be used when sealing:
    - Within 1" of a double-wall gas flue/vent pipe.
    - Within 6" of a single-wall gas flue/vent pipe.

21. SEALING REFRIGERANT LINES

- **Sealant**
  - Cork tape shall be used for sealing gaps where refrigerant lines penetrate the coil box/plenum.

22. SEALING REMOVABLE SERVICE PANELS

- **Sealant**
  - UL 181A or 181B metallic pressure sensitive tape with non-butyl (e.g., acrylic) adhesive shall be used to seal service panels, filter access covers, etc.

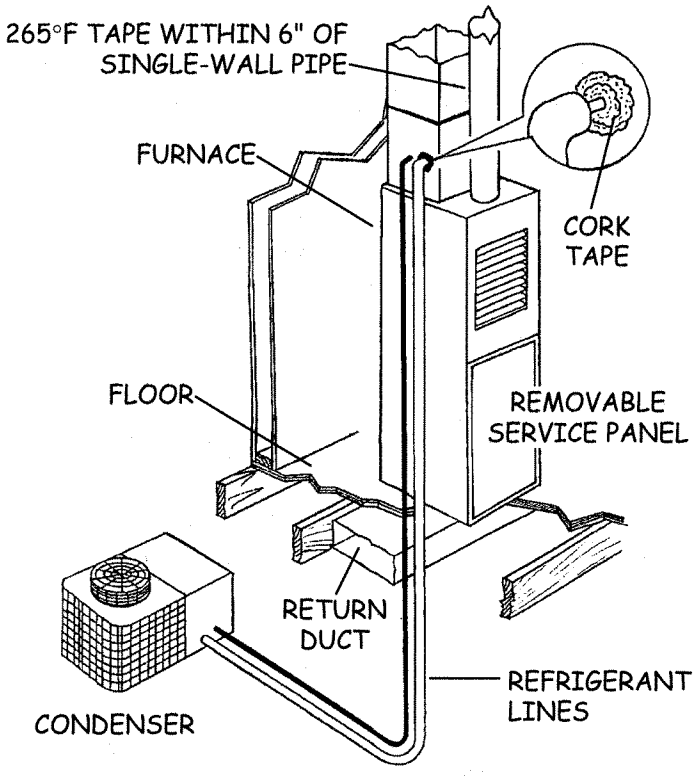

23. REPAIRING AND SEALING FLEXIBLE NONMETALLIC DUCTS

- **Beaded Fittings—Mastic Sealants**
  - A uniform coat of mastic is applied to the outside of the fitting.
  - At least 2" of duct core is pulled onto the fitting, with at least 1" extending past the bead.
  - A drawband (or metal clamp) is installed behind the bead.
  - Mastic is applied externally as needed to ensure a complete seal.
- **Beaded Fittings—Pressure Sensitive Tapes**
  - At least 2" of duct core is pulled onto the fitting, with at least 1" extending past the bead. (Fitting must provide additional 1" surface beyond duct core for application of tape.)
  - A drawband (or metal clamp) is installed behind the bead.
  - Connection is sealed with at least 3 staggered wraps of tape applied uniformly over both the core and the fitting.
- **Non-Beaded Preexisting Fittings—All Sealants**
  - The duct core is secured to the fitting with internally-placed mastic and a drawband, or
  - The duct core's wire coil is secured to the fitting with evenly-spaced #8 sheet metal screws that capture the wire.
    - Screws must penetrate "181B-FX" pressure sensitive tape applied over the duct core to protect it from tearing.
    - 3 screws for diameters up to 12"; 5 screws for diameters over 12".
  - The connection is sealed with duct mastic or 3 staggered wraps of pressure sensitive tape.
- **Core Repairs**
  - Holes/damage in the duct core shall be repaired by removal of the damaged section and insertion of a sleeve/coupling.

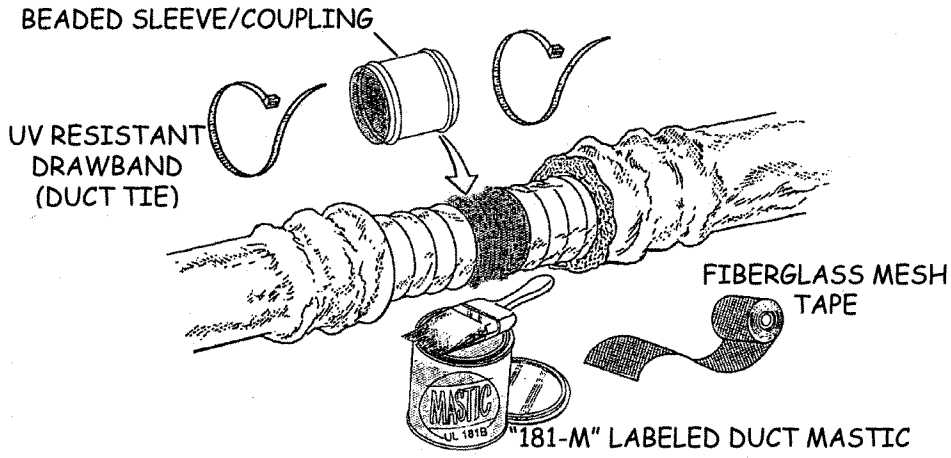

24. REPAIRING AND SEALING FLEXIBLE METALLIC DUCTS

- **Factory-installed Sleeve Present**
  - Joint shall be secured and sealed, like rigid metal ducts, per Item 24.
- **Factory-installed Sleeve Not Present**
  - The end of the core shall be trimmed squarely, then secured and sealed as described below.
  - Sealing with Mastic
    - A uniform coat of mastic is applied to outside of the fitting.
    - At least 1" of duct core is pulled over fitting and secured with screws.
    - Mastic is applied externally as needed to ensure a complete seal.
  - Sealing with Pressure Sensitive Tape
    - At least 1" of duct core is pulled over fitting and secured with screws.
    - Fitting must provide additional 1" surface beyond duct core.
    - Connection is sealed with at least 3 staggered wraps of tape applied uniformly over both the core and the fitting.
  - Installation of Screws
    - The core is secured to the fitting with #8 sheet metal screws positioned at least 1/2" from the end of the core.
    - Screws are equally spaced.
      - 3 screws for duct diameters under 12".
      - 5 screws for diameters 12" and over.
- **Core Repairs**
  - Holes/damage in the duct core shall be repaired by removal of the damaged section and insertion of a sleeve/coupling.

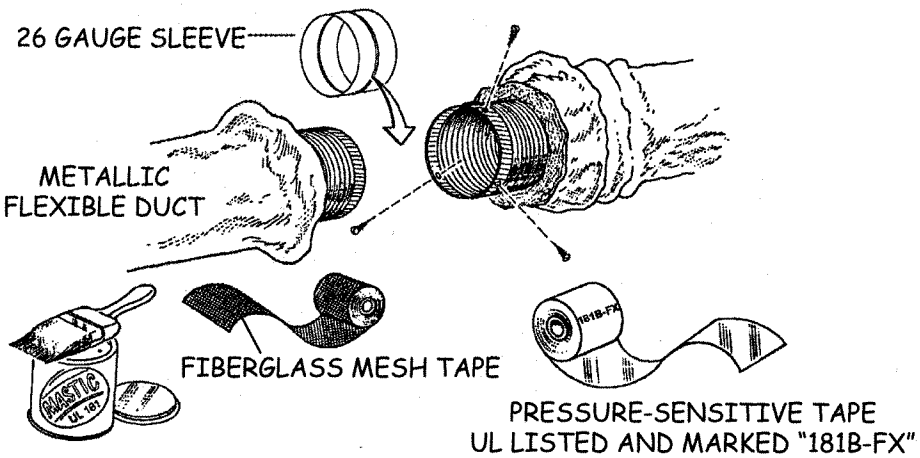

25. FLEXIBLE DUCT INSULATION AND JACKET

- **Insulation shall completely cover the duct core and fitting.**
- **Jacket (Vapor Barrier)**
  - The jacket shall be pulled back over the insulation.
    - The jackets shall overlap at least 2" at splices.
    - Jackets shall be secured/sealed with a drawband and/or 3 staggered wraps of pressure sensitive tape.
- **Jacket Repairs**
  - Rips and holes in the vapor barrier shall be repaired with pressure sensitive tape or with mastic and mesh tape.
  - Ducts with *Air-Permeable* Core:
    - The jackets shall be overlapped at least 2" at splices.
    - Jacket ends at splices and connections shall be secured and sealed with:
      - 3 staggered wraps of minimum 2" pressure sensitive tape, <u>or</u>
      - Mastic applied between the jackets and secured with a drawband.
    - Breaches in the outer vapor barrier shall be sealed with pressure sensitive tape, or mastic and mesh tape.

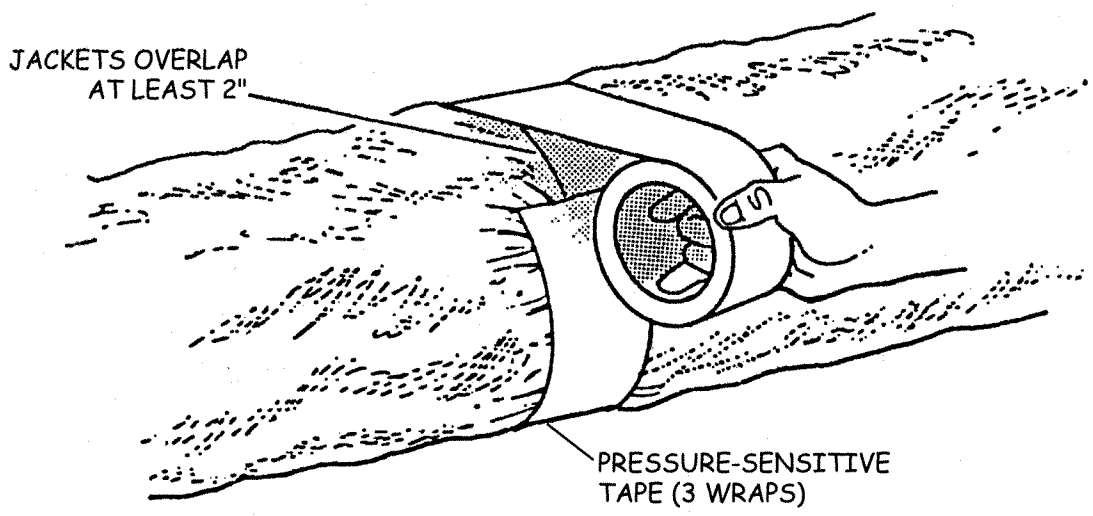

26. REPAIRING AND SEALING RIGID METAL DUCTS

- **Rigid Metal Connection Contact Lap**
  - Crimp joints shall overlap at least 1-1/2" (e.g., connection of duct to fitting, or two sections of duct).
- **Mechanical Fasteners**
  - Rigid metal duct connections shall be secured with equally-spaced #8 sheet metal screws.
  - Round Ducts
    - 3 screws on diameters up to 14".
    - 4 screws on diameters 15" to 19".
    - 5 screws on diameters 20" to 24".
  - Rectangular Ducts
    - At least 1 screw per side.
  - Lapped Seams (Field Fabricated Metal Plenums, etc.)
    - Overlapped surfaces shall be:
      - In substantial contact with each other along the entire seam.
      - Securely fastened together (e.g., with #8 sheet metal screws at intervals of 12" or less).

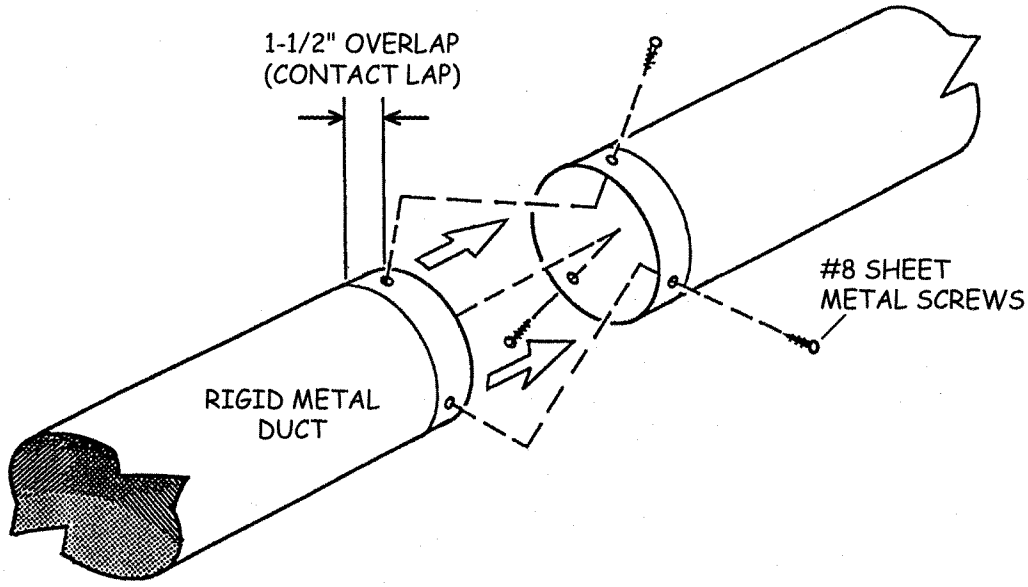

26. REPAIRING AND SEALING RIGID METAL DUCTS (continued)

- **Gaps 1/4" or smaller may be sealed with:**
  - Duct mastic, or
  - Metallic pressure sensitive tape.
- **Gaps over 1/4" up to <1" wide shall be sealed with:**
  - Duct mastic with embedded fiberglass mesh, or
  - Metallic pressure sensitive tape covered with mastic.
- **Gaps 1" or wider shall be:**
  - Repaired with a sleeve or a sheet metal patch (per Item 27), and
  - Sealed with mastic or tape.
- **All Connections**
  - Mastic and fiberglass mesh shall be installed per Item 19.
  - Metallic pressure sensitive tapes shall be installed per Item 20.

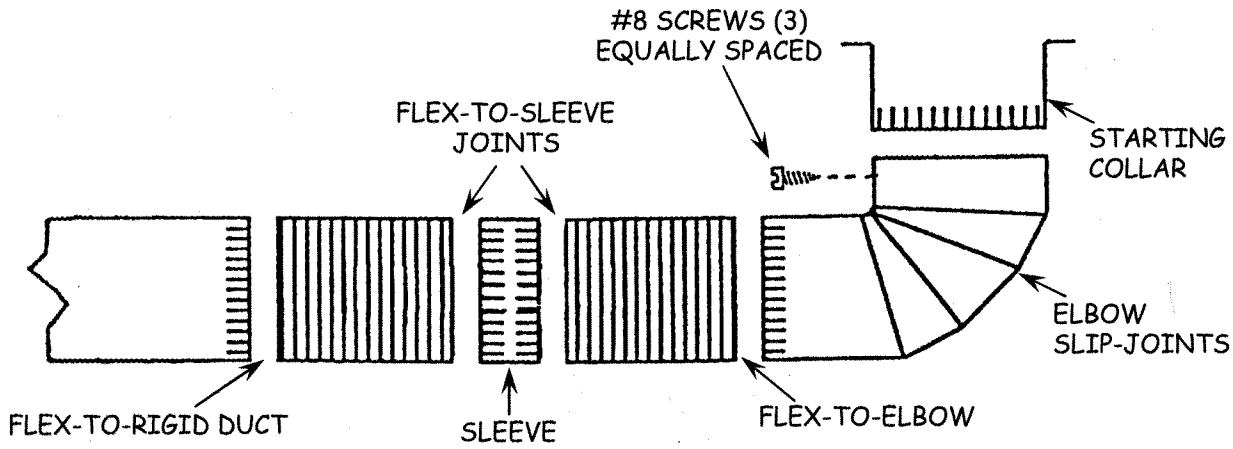

- TAPE OR MASTIC ON GAPS UP TO 1/4"
- MASTIC & MESH, OR METALLIC TAPE COVERED BY MASTIC, ON GAPS OVER 1/4"

27. SHEET METAL PATCHES FOR RIGID METAL DUCTS

- **Material**
  - Patch material shall match the existing duct material (i.e., galvanized patch for galvanized duct, or aluminum patch for aluminum duct).
  - Gauge of the patch shall equal or exceed gauge of the existing duct.
- **Installation**
  - Patch material shall:
    - Extend at least 1" beyond each edge of the gap, and
    - Overlap itself by at least 1".
  - The patch shall be wrapped tightly around the duct and secured with #8 sheet metal screws.
    - Where the patch overlaps itself, at least 1 screw shall be installed on each side of the gap.
    - At least 2 more screws shall be evenly-spaced around the duct on each side of the gap.
- **Sealing**
  - All patch edges/gaps shall be sealed per Item 26.

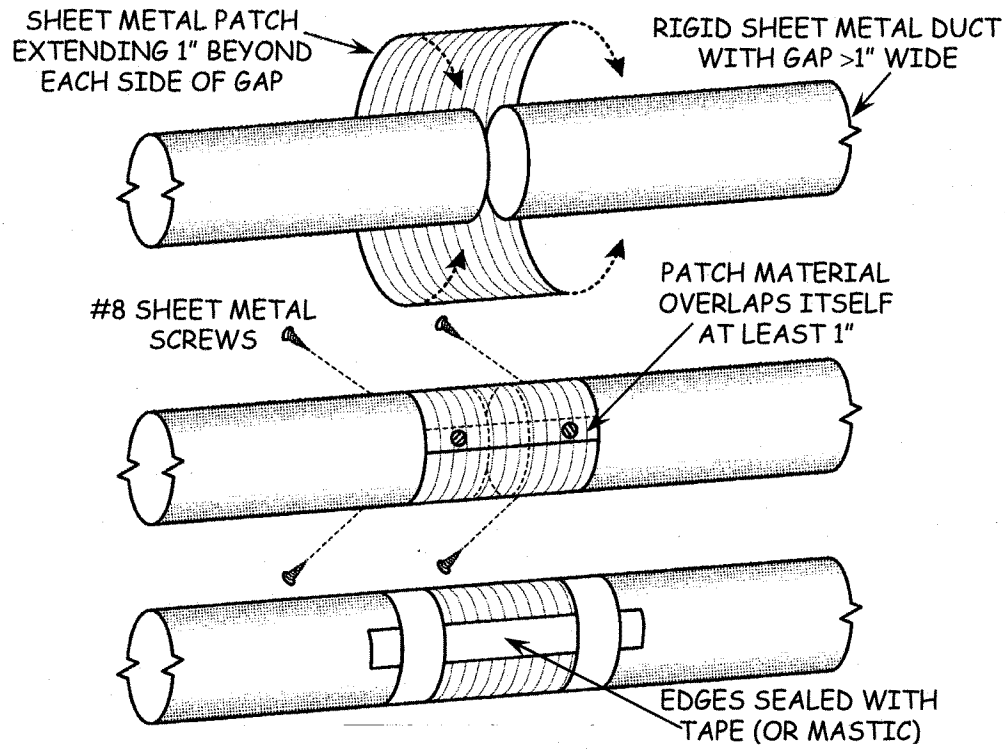

28. REGISTER BOOT/RISER REPAIR AND SEALING

- **Attachment**
  - Duct boots and risers that are loose or detached from the structure be reattached and mechanically secured (e.g., with screws, staples, or nails).
- **Boot/riser termination shall be then be sealed to the floor.**
  - Gaps up to 1/4" wide may be sealed with:
    - Elastomeric caulk (e.g., polyurethane or silicone), <u>or</u>
    - Duct mastic applied at least 1/8" thick.
  - Gaps over 1/4" up to <1" wide:
    - Gaps shall be sealed when possible with butyl tape, or with duct mastic reinforced with mesh tape.
    - Elastomeric caulk and pressure sensitive metallic tape may be used together where a thinner repair is required.
  - Gaps 1" or wider shall be:
    - Patched with sheet metal,
    - Mechanically secured as feasible, and
    - Sealed with tape, mastic, or caulk.

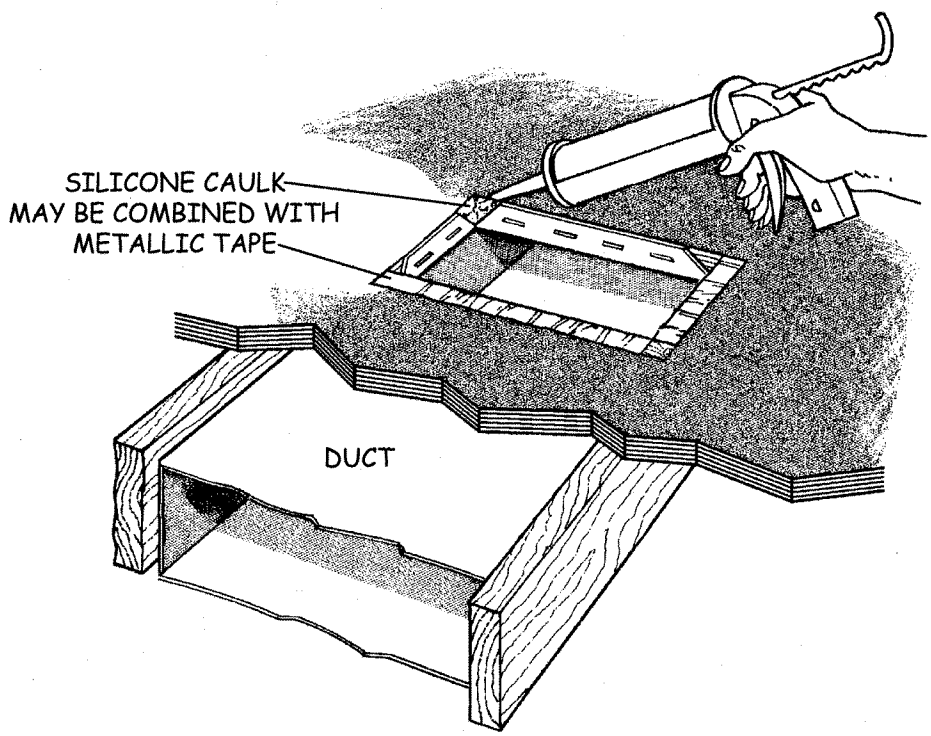

28. REGISTER BOOT/RISER REPAIR AND SEALING (continued)

- **Risers**
  - Risers that are loose or are disconnected from the trunk shall be reattached, secured, and sealed (e.g., with butyl tape).
- **Metal Overlaps/Tabs**
  - Metal overlaps/tabs at joint between the riser and trunk duct shall be repaired and permanently sealed (e.g., with butyl tape).
- **Preparation of Joint**
  - Metal overlaps/tabs shall be bent as needed to achieve the best possible metal-to-metal contact.
  - Dust and dirt shall be removed to the extent feasible from surfaces to which sealant will be applied (e.g., with vacuum cleaner hose/nozzle, with a brush, or with a damp rag).

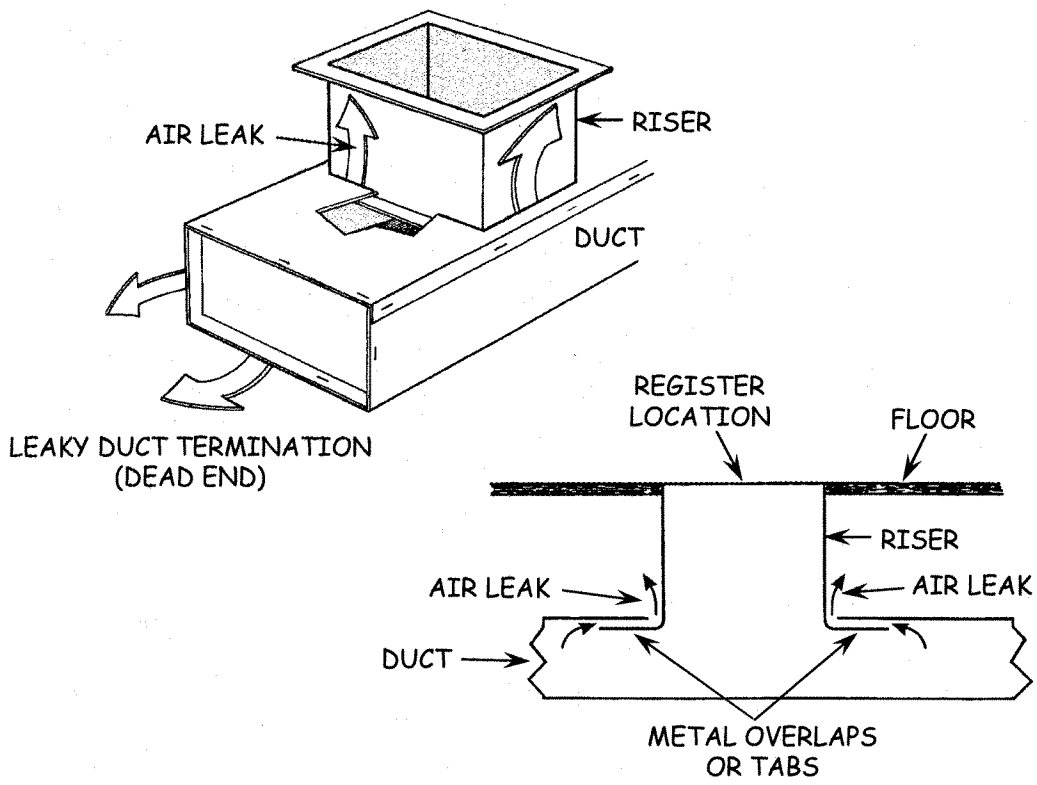

28. REGISTER BOOT/RISER REPAIR AND SEALING (continued)

- **Application of Sealant**
  - Joint overlaps/tabs shall be sealed with:
    - Butyl tape (3" width recommended), <u>or</u>
    - Duct mastic and embedded fiberglass mesh tape.
  - Sealant shall cover all overlaps/tab and extend approximately 1" beyond the ends of the overlaps/tabs.
  - Pre-existing metallic tape:
    - If loose, shall be removed to the extent feasible.
    - If not loose, shall be covered with new sealant to achieve a complete, permanent seal.

29. SEALING OTHER LEAKS WITHIN REACH

- **Reachable Leaks**
  - Other obvious leaks that can be reached through the register opening shall be sealed utilizing materials and methods prescribed in Items 26 and 27 above.
- **Such leaks may include:**
  - Duct joints/splices and other loose metal overlaps.
  - Duct terminations (dead ends).
  - Leaks in the duct connector underneath the furnace (accessed through removable bottom panel on front of unit).

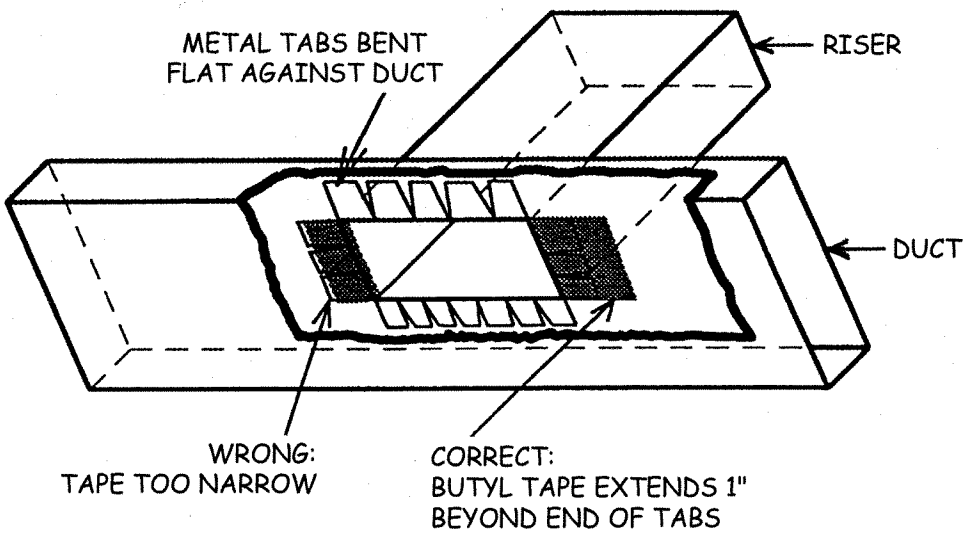

30. REPAIRING LEAKY DUCT TERMINATIONS

- **A duct termination (dead end) that is very leaky or open shall be:**
  - Repaired and sealed, or
  - Securely blocked (e.g., with a 1-piece or 2-piece sheet metal dam, or a fiberglass duct board dam) and permanently sealed.
- **Dam Installation**
  - Dams shall be:
    - Placed as far from the register opening as feasible.
    - Attached securely (mechanically when possible).
  - Dams may be attached/sealed with:
    - Butyl tape, or
    - Mastic and mesh tape.

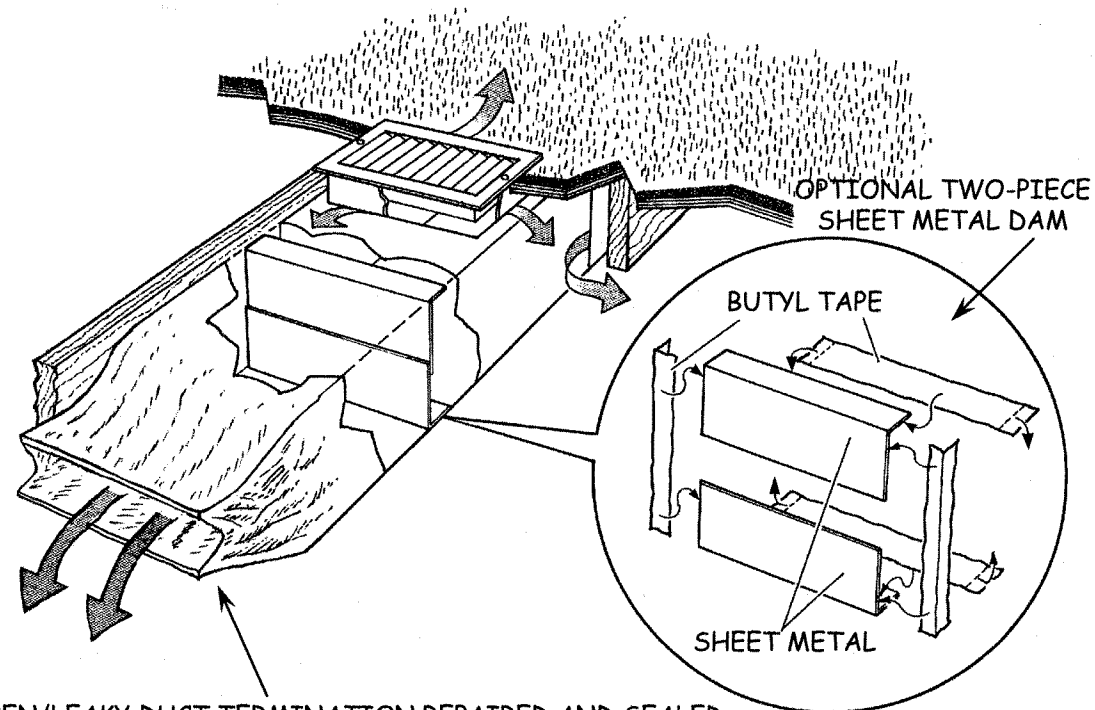

OPEN/LEAKY DUCT TERMINATION REPAIRED AND SEALED
OR BLOCKED WITH A DAM MADE OF SHEET METAL
OR FIBERGLASS DUCT BOARD

31. DUCTED RETURNS

- **Existing Ducted Returns**
  - All accessible components shall be inspected for decay, damage, and leaks, and shall be repaired as needed.
  - Rodent barrier (bellyboard) sections shall be removed for access as needed.
  - Accessible leaks shall be repaired.
  - Access holes made in the rodent barrier shall be repaired as prescribed in Item 35.

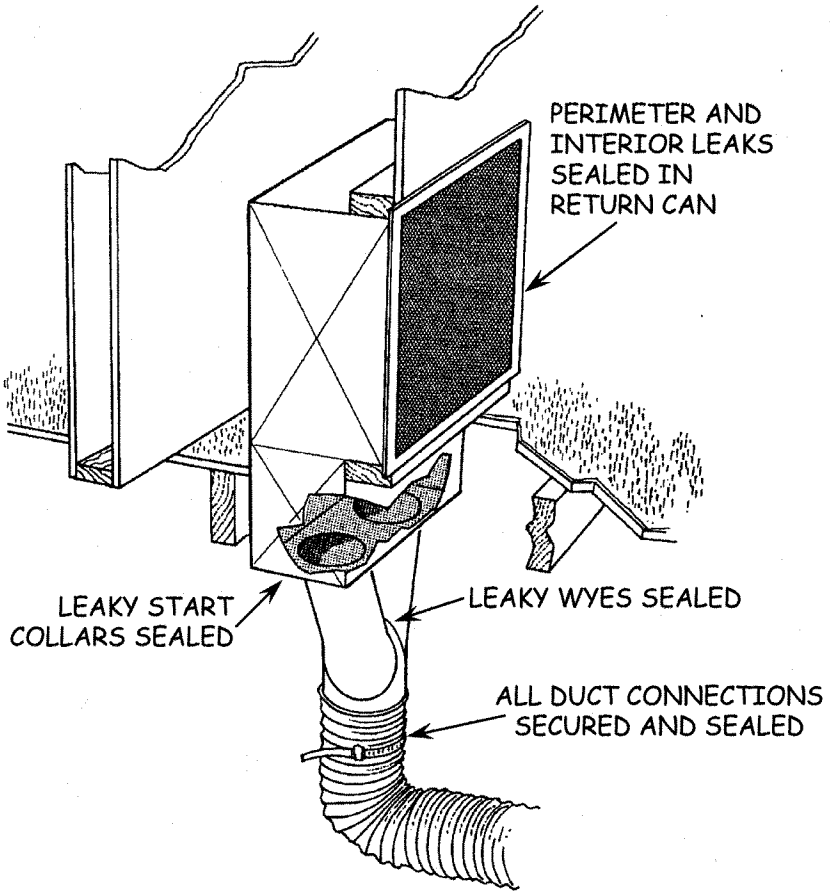

32. CROSSOVER DUCTS

- **Double-Wide Units**
  - Disconnections shall be reconnected, mechanically secured, and sealed.
  - Other major leaks that are repairable shall be repaired and sealed.
  - Disconnected and damaged duct components that cannot be feasibly repaired shall be replaced.
- **Duct Installation**
  - Ducts shall be installed, secured, supported, and sealed as prescribed in this section.
  - Flexible nonmetallic and flexible metallic ducts shall be sealed with UL 181B listed sealants.
    - Mastics: labeling shall include the designation "181B-M".
    - Pressure sensitive tapes: markings shall include the designation "181B-FX".
  - Ducts shall be installed above the ground in accordance with Item 17.

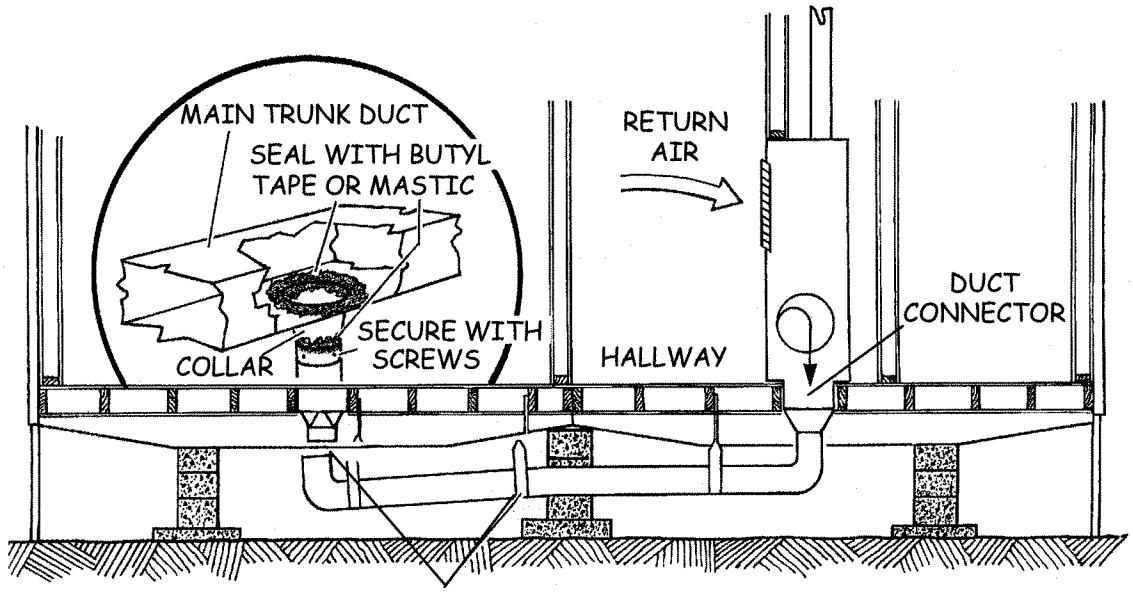

DISCONNECTED/DAMAGED CROSSOVER DUCT REPAIRED/REPLACED, LOOSE CONNECTION TO TRUNK REPAIRED AND SEALED

33. NEW CENTRAL RETURN

- **Upflow Furnace with Belly Cavity Return**
  - When installation of a new ducted return is prescribed in the program P&P, it shall be installed, supported, and sealed as prescribed in this section.
  - The system shall:
    - Be properly sized by a qualified HVAC technician.
    - Provide a balanced air flow throughout the mobile home.
  - When a new central return is installed:
    - The existing belly cavity return shall be abandoned.
    - The abandoned register openings shall be blocked off and permanently sealed.

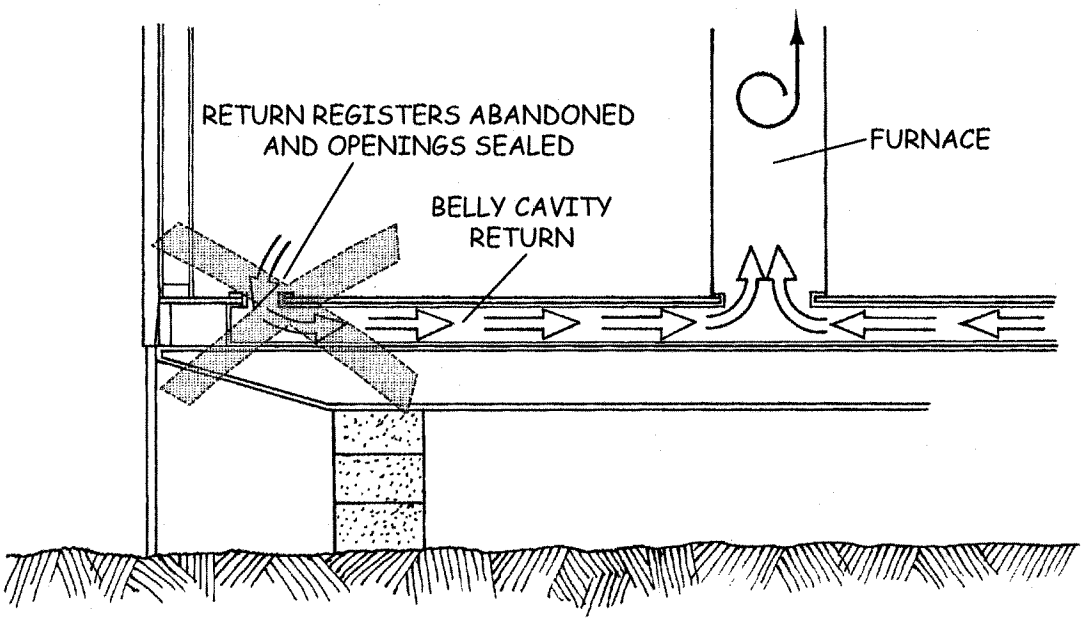

BELLY-CAVITY RETURN ABANDONED
WHEN A DUCTED CENTRAL RETURN IS INSTALLED

33. NEW CENTRAL RETURN (continued)

- **Upflow Furnace with Belly Cavity Return (continued)**
  - The return grille shall be:
    - Sized to provide a minimum of 2 sq. in. of NFVA for each 1,000 Btu/hr furnace capacity.
    - Installed in the outside wall of a closet when possible, or in the floor when necessary.
    - Located in a hallway or other open area.
    - Centrally located within the mobile home.
  - Proper air flow shall be provided for each room containing a supply register utilizing one of the following methods:
    - An uncloseable grille may be installed in the door or wall which provides a NFVA equal to at least 1 sq. in. for every 5 sq. ft. of total living area in the room.
    - 2" to 2-1/2" may be removed from the door bottom; however, no more than half the NFVA so created shall be counted as return air area.
  - System balance shall be checked and modifications shall be made as needed to provide proper airflow and room pressures.

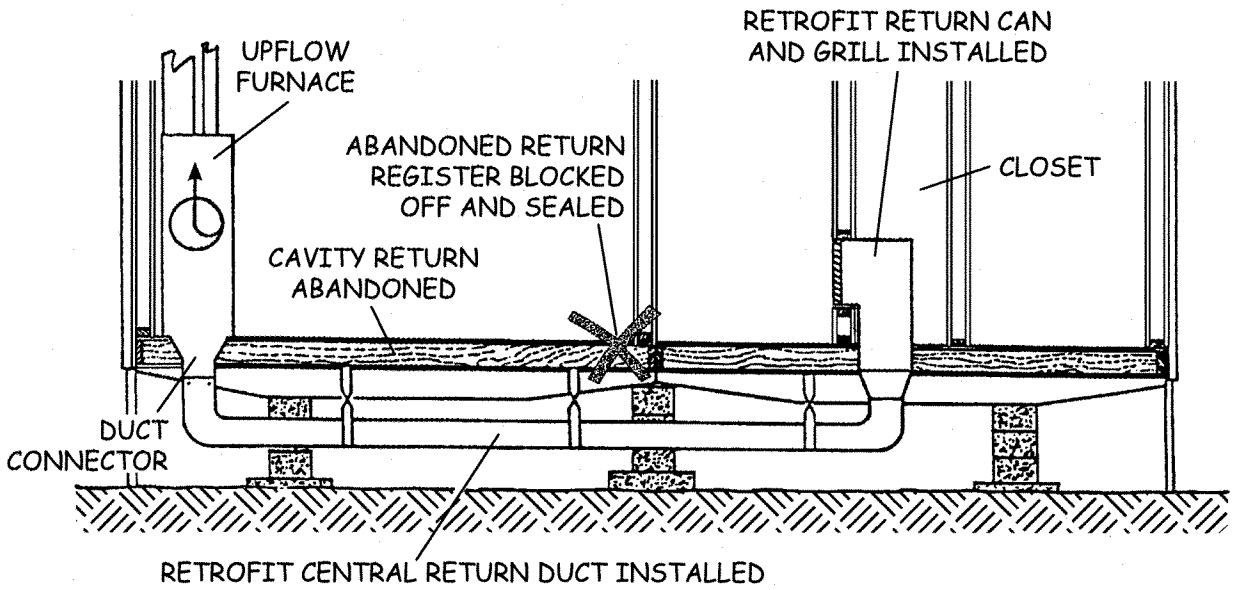

34. REGISTER GRILLES

- **Repair and Replacement**
  - Dampers shall function properly.
  - Dampers which will not open or stay open shall be removed if register replacement is not feasible.
  - Damaged registers which do not allow proper airflow shall be repaired or replaced, in accordance with the program P&P.
- **Removal and Reinstallation**
  - Boot sealing shall <u>not</u> cause any register to be difficult to remove or reinstall.

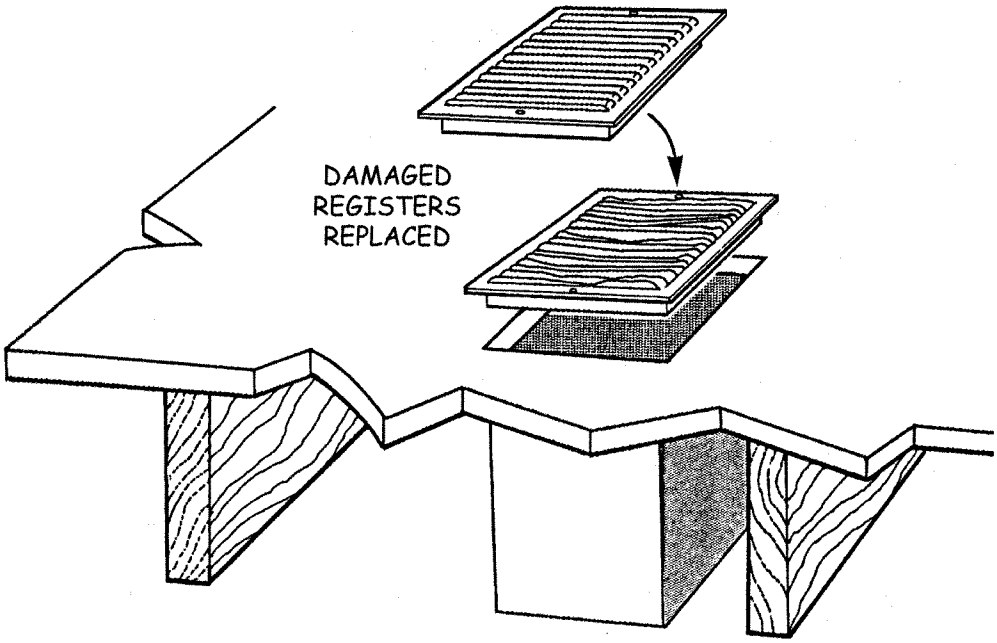

35. RODENT BARRIER (BELLYBOARD) REPAIR

- **Access Holes**
  - Holes in the bellyboard created to access ducts from under the mobile home shall be repaired.
- **Rigid or Flexible Rodent Barrier**
  - All holes shall be repaired with material equivalent or superior to the existing bellyboard.
  - All patches shall be securely and permanently attached and create a complete and permanent seal.
- **Patches in *Flexible* Rodent Barrier**
  - All patches shall be secured and sealed by means of self-adhesive backing, or caulk/adhesive sealant.
  - Patches shall be mechanically secured as needed to ensure permanence, by such means as one or more of the following:
    - Outward clinch ("stitch") staples, or equivalent, positioned to permanently and securely attach the patch directly to the existing bellyboard.
    - Fasteners penetrating the wooden joists a minimum of 1/2" and spaced a maximum of 4" OC.
    - Wooden strips attached permanently secured (e.g. with screws into floor joists, or wedged above adjacent girders).

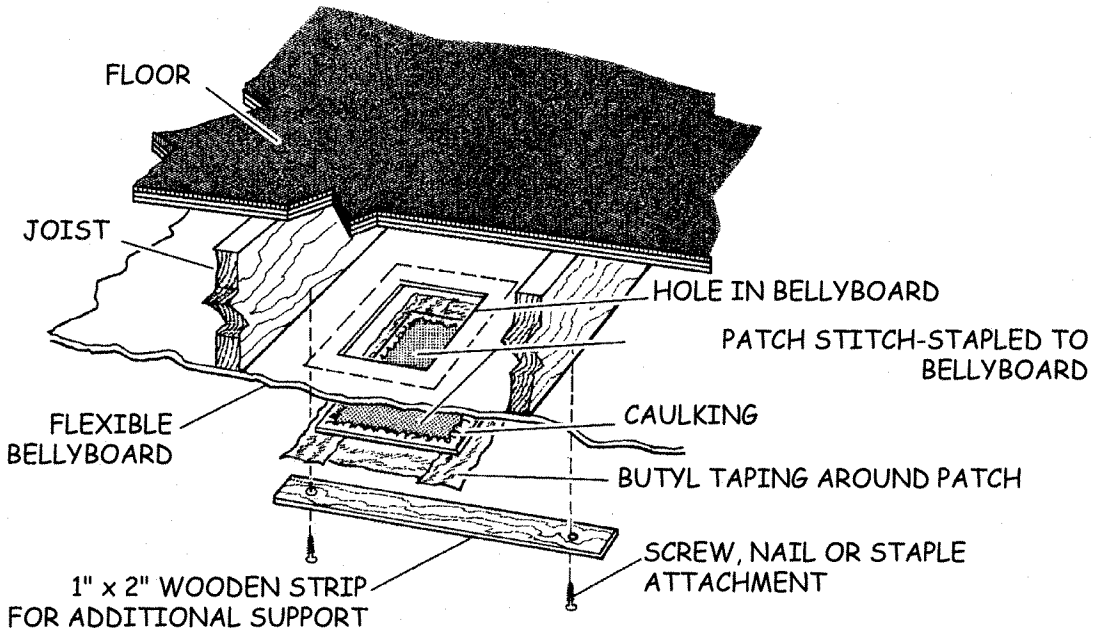

35. RODENT BARRIER (BELLYBOARD) REPAIR (continued)

- **Patches in *Flexible* Rodent Barrier (continued)**
  - Tape recommended by barrier manufacturer, butyl tape, or other compatible sealant shall be placed around the perimeter of the flexible patch, as needed, to ensure a complete and permanent seal.
- **Patches in *Rigid* Rodent Barrier**
  - Patches shall be sealed with suitable caulk/adhesive sealant and secured mechanically.
  - Approved mechanical attachments include:
    - Fasteners penetrating the wooden joists a minimum of 3/4" and spaced a maximum of 6" OC.
    - Wooden strip supports spanning beyond the patch and secured mechanically into the framework above.
    - Wedging the patching material between the existing bellyboard and the metal framing of the undercarriage.
    - Fasteners which penetrate only the existing bellyboard, for small patches in high density material.
    - A combination of methods which will provide a stable, permanent repair.

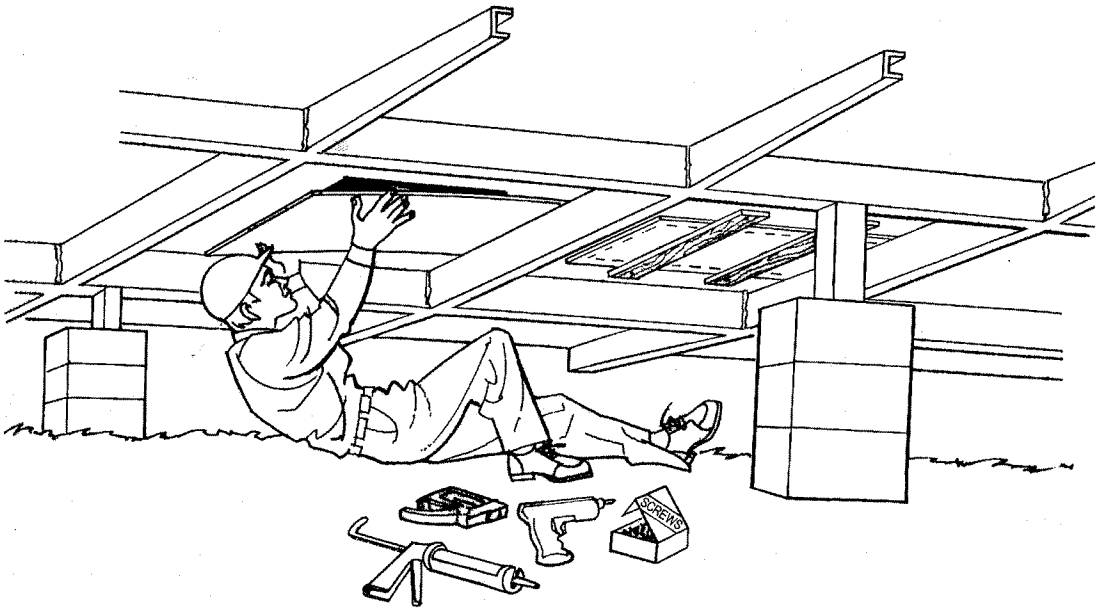

36. LEAD-SAFE WEATHERIZATION

- Lead-safe practices shall be employed when working with pre-1979 painted materials per state codes T8 Section 1532.1 and T17 Section 36000, et seq.

37. POST-INSTALLATION REQUIREMENTS

- Paint dust and chips, scraps, and other debris resulting from duct repair and sealing activities shall be cleaned up and removed from the premises—utilizing lead-safe practices when applicable.
- Furniture and other household items moved for duct repair and sealing work shall be returned to their original positions.

CALIFORNIA DEPARTMENT OF HEALTH SERVICES Childhood Lead Poison Prevention Program Lead-Related Construction Information Hot-Line 1-800-597-LEAD (1-800-597-5323) www.childlead.com	
NATIONAL LEAD INFORMATION CENTER **1-800-424-LEAD**	
EPA United States Environmental Protection Agency US EPA Region IX 75 Hawthorne St. San Francisco, CA 94105 Region IX Contact: Don Lanier (415) 744-1123	U.S. Department of Housing and Urban Development Office of Lead Hazard Control 451 7th Street, S.W., Room B-133 Washington, DC 20410 PH: 202-755-1785 FAX: 202-755-1000
www.epa.gov/lead/index.html	www.hud.gov/lea/leahome.html

SEE SEPARATE "NONFEASIBILITY CRITERIA" WORD DOCUMENT FOR THE NONFEASIBILITY PAGE TO THIS SECTION

CENTRAL HIGH EFFICIENCY AIR CONDITIONER REPLACEMENT STANDARDS

1. APPROVED MATERIALS

- **Installed within a manufactured home:**
  - Materials shall be in compliance with California Department of Housing and Community Development (HCD) regulations and HUD MHCSS: Code of Federal Regulations, Chapter XX, Part 3280 (also incorporated into the California Code of Regulations as Title 25, Division 1, Chapter 3, Article 2, Subchapter 3).
- **Installed outside a manufactured home:**
  - Materials shall be in compliance with the authority having jurisdiction: HCD or the local building department.
- **Package Units (Dual Packs)**
  - Minimum SEER of 13 and EER of 11.5.
- **Split Systems**
  - Minimum SEER of 13 and EER of 11.5 with a Thermostatic Expansion Valve (TXV).
  - The EER shall be determined by the coil match as listed in the current ARI Directory.

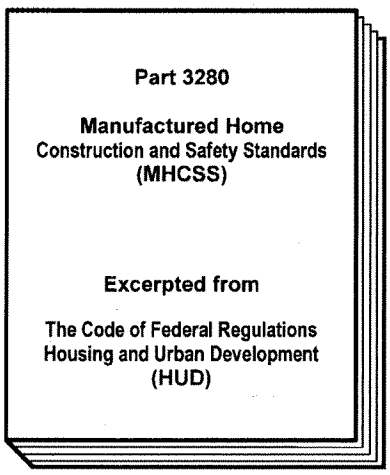

LISTED

MATERIALS INSTALLED
MUST COMPY WITH
HUD MHCSS

1. **APPROVED MATERIALS (continued)**
   - **Programmable Wall Thermostat**
     - ENERGY STAR® qualified.
     - System powered, not battery powered, on 24 volt systems.
     - Digital with anti-short-cycle feature.
     - Minimum setback capability of 10°F.
     - At least two setback periods per 24 hour day, with change cycle increments being no greater than 30 minutes.
     - Manual override and standard alkaline battery backup or other program saving backup system.
     - Positive on/off switch that is easily accessible.
     - Compatible with the HVAC equipment.
   - **Standard Wall Thermostat**
     - Alternative when customer refuses programmable thermostat.
     - Digital with built in anti-short-cycle feature.
     - Conforms with manufacturer's instructions.
     - Compatible with the HVAC equipment.
     - Includes a positive on/off switch.

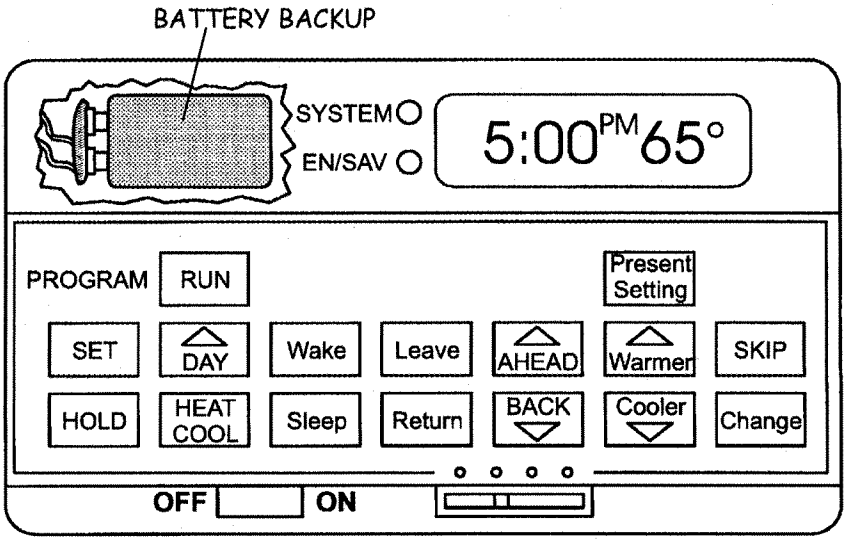

DIGITAL PROGRAMMABLE THERMOSTAT
WITH ON/OFF SWITCH

2. WARRANTY

- **All Installations**
  - Parts and labor shall be covered by a minimum one (1) year written warranty.
  - Compressor warranty shall extend to five (5) years.
  - All written warranty information and manufacturer's operating and maintenance instructions shall be supplied to the customer.

3. GENERAL REQUIREMENTS

- **Permit**
  - A permit shall be obtained from and finalized by:
    - HCD for installations inside the mobile home.
    - HCD, or as applicable, the local building department for installations outside the mobile home.
- **Standards and Specifications**
  - Installation shall be in compliance with manufacturer's instructions and specifications, and as applicable, with requirements of HCD and/or the local building department.
- **Air Filters**
  - All air filters shall be installed and clean.
  - Unframed washable filters shall be properly supported to prevent being drawn into the air handler, as prescribed in Section 16.

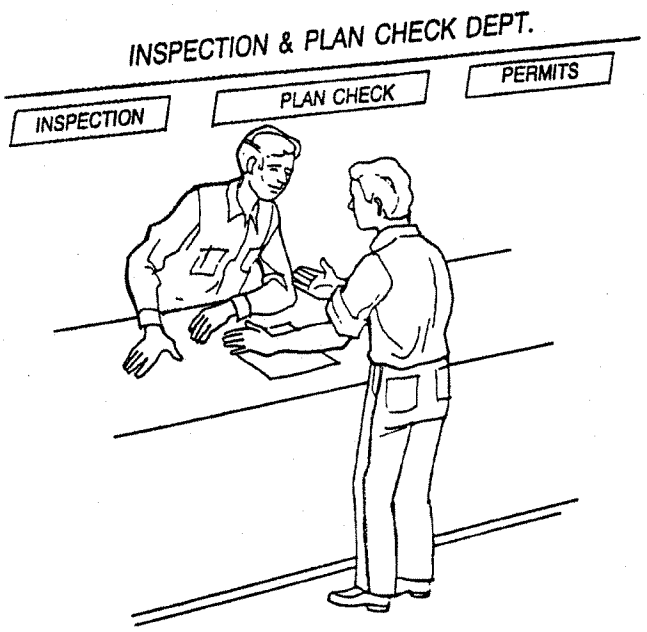

4. SIZING CRITERIA

- **System Size**
  - Unit shall be sized in accordance with Title 24, HCD requirements, or local code, whichever is most stringent.
  - The tonnage of the new system should be equal to or smaller than the existing system.
- **Refrigerant Lines**
  - Shall be properly sized per manufacturer's specifications.
  - Shall provide the rated EER for the combination condenser and evaporator coil match.

5. EVAPORATOR (INDOOR) COIL AND CONDENSER (OUTDOOR) COIL

- **Split Systems**
  - An evaporator coil shall be installed which is verified to be a rated match with the condenser coil, as listed in current ARI Directory.
  - The coil label shall be visible.
  - Condenser unit and evaporator coil shall be verified to function properly.
  - An access panel shall be provided for cleaning.
- **Evaporator Coil Replacement**
  - Prior to charging, vacuum shall be drawn on the refrigerant lines to test for leaks and remove water vapor.
  - Depth of vacuum and length of time shall be as specified by the manufacturer.

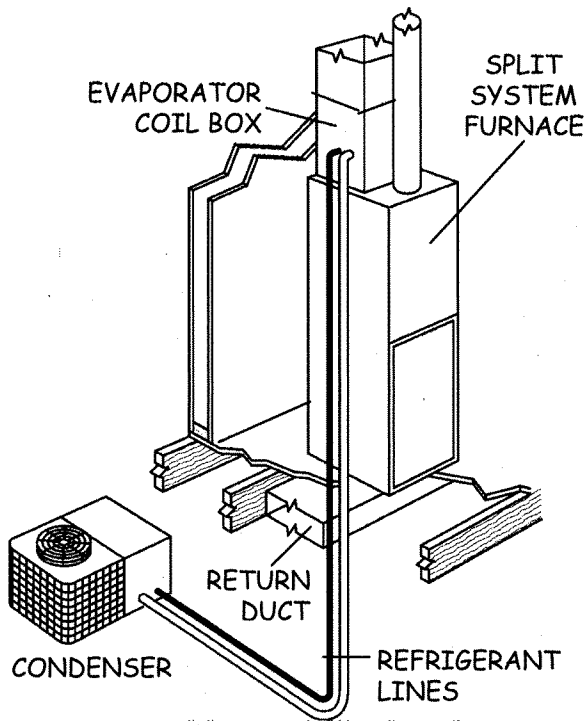

6. OPERATIONAL REQUIREMENTS

- **Air Flow**
  - Air flow through the indoor coil shall be adequate to meet manufacturer's specifications.
- **Programmable Thermostat Control**
  - A new programmable thermostat shall be installed in accordance with Section 16.
  - Thermostat shall be tested and verified to operate properly per manufacturer's instructions.
- **Refrigerant System Charging**
  - Refrigerant system shall be properly charged using methods specified by the manufacturer.
  - Refrigerant recovery shall be performed in accordance with Federal law.
    - A recovery device shall be used.
    - Ventilation to the atmosphere is not allowed.
  - Technicians performing evacuation and charging must have EPA-approved certification as a Type II or Universal technician.

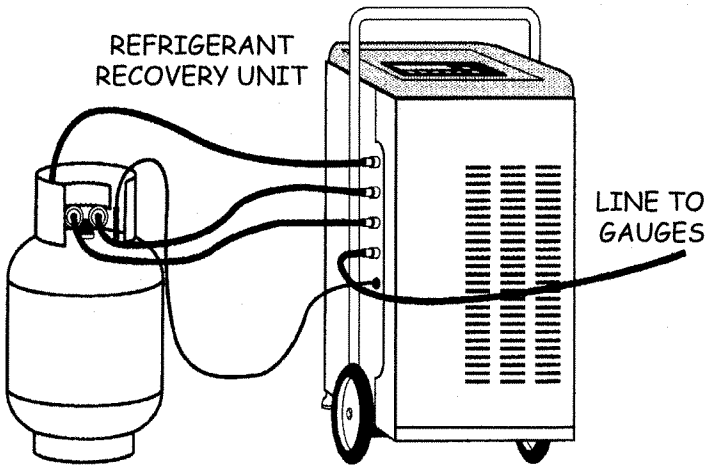

7. AIR DISTRIBUTION SYSTEM

- **Existing Duct System**
  - System shall be examined for leaks and disconnections and repaired as needed in accordance with the program Policy and Procedures.
  - Testing shall be performed in accordance with WIS Section 11, Duct Testing Standards, and duct repairs and sealing shall be made in accordance with WIS Section 17, Duct Sealing Standards.
- **Return System**
  - Belly-Cavity and Roof-Cavity Returns
    - In accordance with the program Policy and Procedures:
      - Existing belly-cavity return shall be abandoned, and a new ducted central return shall be installed.
      - Existing leaky roof-cavity return shall be repaired as applicable, and replaced with a new central return when repair is needed but not feasible.
  - New central return shall be designed and installed in conformance with WIS Section 17 and HCD requirements.
- **Cabinet and Plenum**
  - Components shall be mechanically attached and sealed around the perimeter (cabinet-to-duct connector, cabinet-to-plenum) using materials and methods prescribed in WIS Section 17.
  - Plumbing and wiring penetrations into the evaporator coil box and return air chamber shall be sealed with cork tape.
- **New Ductwork**
  - Components shall be installed in conformance with manufacturer's instructions.

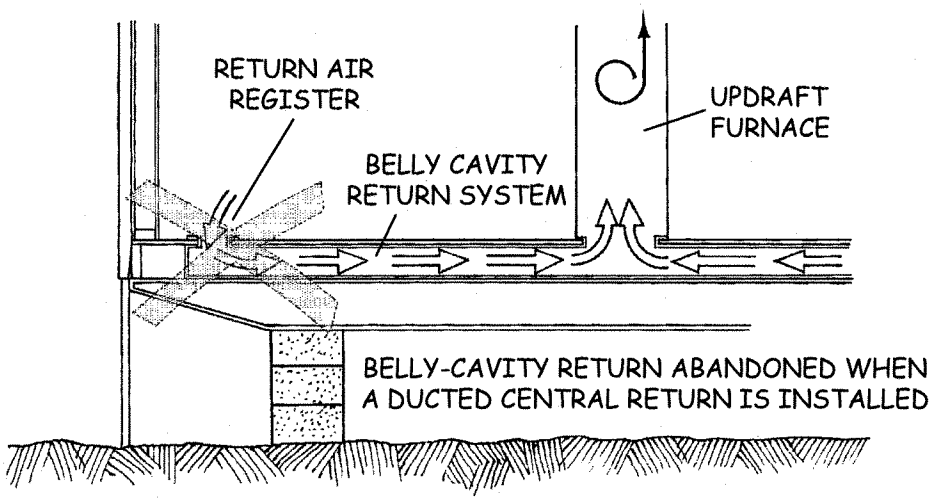

8. SELF-CONTAINED AIR CONDITIONERS

- **Installation of a self-contained air conditioner sharing a common supply duct system with the furnace shall comply with the following requirements:**
  - Automatic Dampers
    - Furnace shall have an automatic damper installed to prevent cold air from entering the furnace when the HVAC system is in cooling mode.
    - Air conditioner shall have an automatic damper installed to prevent hot air from entering the air conditioning unit when the HVAC system is in heating mode.
  - Function Control
    - Controls shall prevent the air conditioner and furnace from coming on at the same time.

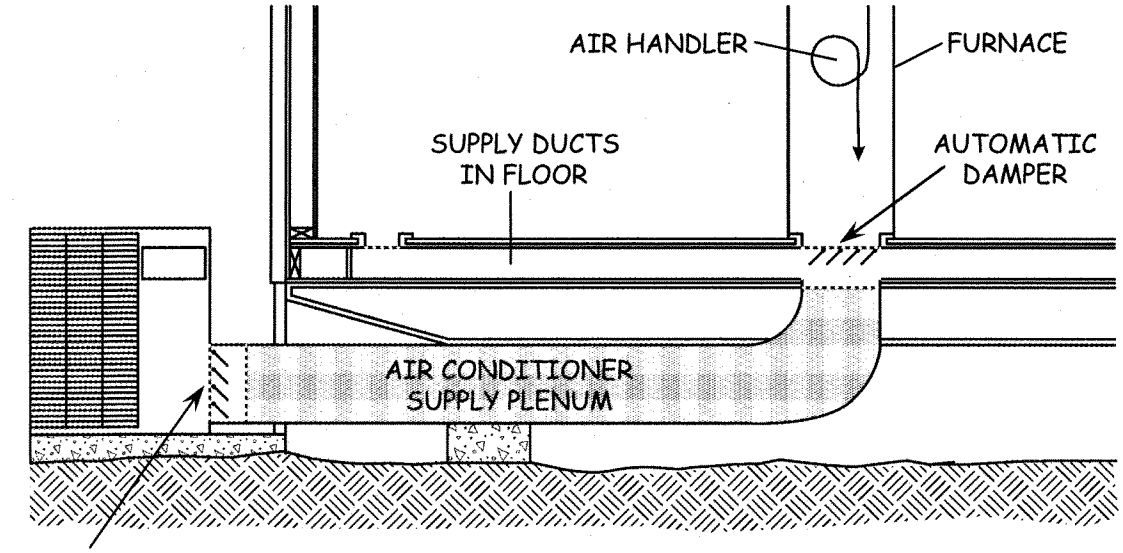

SELF-CONTAINED AIR CONDITIONER
WITH SIDE-BY-SIDE SUPPLY & RETURN PLENUMS

9. ELECTRICAL WIRING, GROUNDING, AND ACCESSIBILITY

- **Electrical wiring, grounding, and unit accessibility shall be in conformance with:**
  - Manufacturer's instructions,
  - HUD MHCSS, Section 3280, Subpart I, and/or as applicable
  - Requirements of the local building department.

10. UNIT DISCONNECTING MEANS (SERVICE DISCONNECT)

- **Outdoor Installations (Split System Condenser or Self-Contained Air Conditioner)**
  - A disconnecting means which is capable of disconnecting the air-conditioning equipment from the circuit feeder shall be installed in conformance with NEC Article 440, Part B, Disconnecting Means.
- **Location**
  - The service disconnect:
    - Shall be located within sight from and readily accessible from the air-conditioning equipment or as required by the local jurisdiction.
    - May be installed on or within the air-conditioning equipment.
- **Rating**
  - The rating of the installed fuses or circuit breakers shall <u>not</u> exceed:
    - The overcurrent rating of the installed air-conditioning equipment.
    - The rating of the box in which they are located.

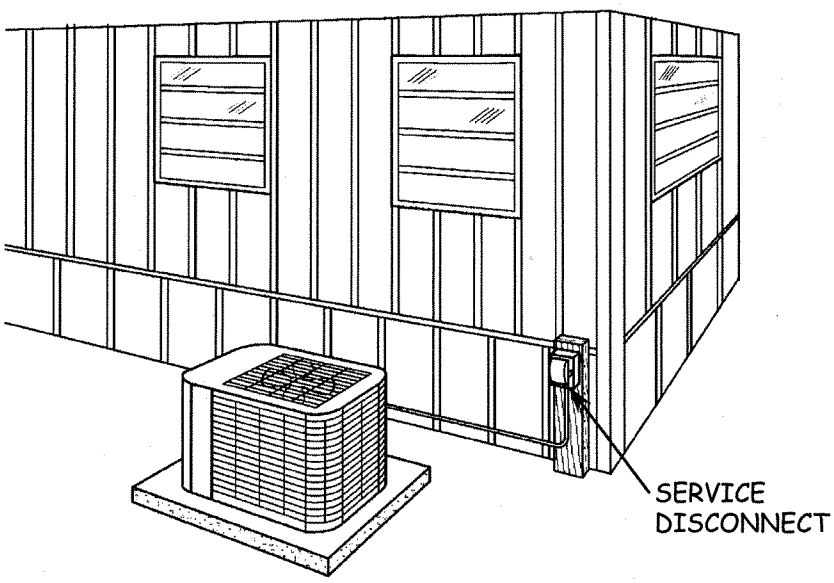

SPLIT SYSTEM REPLACEMENT CONDENSER UNIT

11. BRANCH-CIRCUIT PROTECTION

- **General Requirements**
  - Air-conditioning equipment shall be provided with:
    - Overcurrent protection per NEC Article 240.
    - Disconnecting means per NEC Article 440, Part B.
    - Branch-circuit short-circuit and ground-fault protection per NEC Article 440, Part C.
- **Protection Device Type**
  - The overcurrent protection device shall be the type specified on the air-conditioning equipment nameplate (see Table 21-1).
  - When nameplate specifies an HACR circuit breaker, the installed circuit breaker shall be listed and labeled HACR type (suitable for use with heating, air-conditioning and refrigeration equipment).
- **Protection Device Rating**
  - The branch-circuit protection device shall not exceed the maxi-mum amperage rating specified on the nameplate of the air-conditioning unit.

TABLE 18-1: OVERCURRENT PROTECTION SELECTION GUIDE

HEAT PUMP UNIT NAMEPLATE MARKED:	OVERCURRENT PROTECTION DEVICE* MUST BE:
"Maximum Fuse Size _X_ Amps"	An _X_ Amp Fuse
"Maximum Fuse or HACR Circuit Breaker _X_ Amps"	An _X_ Amp Fuse or HACR-Type Circuit Breaker
"Maximum Fuse, HACR Circuit Breaker, or Circuit Breaker _X_ Amps"	An _X_ Amp Fuse, HACR-Type Circuit Breaker, or Standard Circuit Breaker
"Maximum Overcurrent Protection Device _X_ Amps"	An _X_ Amp Fuse, HACR-Type Circuit Breaker, or Standard Circuit Breaker

***Amperage rating of the device must not exceed that specified on the nameplate.**

12. BRANCH CIRCUIT CONDUCTORS

- **Ampacity and Rating of Conductors**
  - Minimum wire size shall, as applicable, be:
    - Selected from NEC Tables 310-16 through 310-19, or
    - Calculated in accordance with NEC Section 310-15.
- **Voltage Drop and Wire Length**
  - Circuits shall be installed in conformance with NEC Section 210, Branch Circuits and Section 215, Feeders.
  - The voltage drop over the branch-circuit conductor should not exceed 2%. (See NEC Section 210-19(a) (Fine Print Note No. 4).)
  - In 240v circuits, the maximum conductor length should not exceed the values given in the Table 18-2.

TABLE 18-2: MAXIMUM LENGTH OF CIRCUIT (IN FEET)

WIRE SIZE	AMPACITY OF CIRCUIT			
AWG	15	20	30	40
12	160'	120'	–	–
10	250'	190'	130'	–
8	300'	225'	150'	115'

Notes:

- **The table is based on a 4.6v drop (230v X 2% = 4.6v).**
- **The table applies to non-plated (uncoated) solid wire copper conductors at 75°C (167°F) ambient temperature.**
- **For alternate conditions or conductors, use applicable CEC Tables (e.g., see Article 210, "Branch Circuits"; Article 215, "Feeders"; and Chapter 9, Table 8, "Conductor Properties").**

13. MOUNTING OF OUTDOOR EQUIPMENT

- **Ground Mount**
  - Air-conditioning equipment shall be installed in conformance with CMC Section 1106.0.
  - The unit shall rest on concrete or other approved base extending at least 3" above the adjoining ground level.
- **Protection**
  - Units subject to mechanical damage shall be protected in conformance with CMC Section 308.
  - Unit shall be attached to base with seismic straps, when required by applicable code.
- **Overhead Clearance**
  - Overhead clearance shall be provided in conformance with manufacturer's specifications and local code.

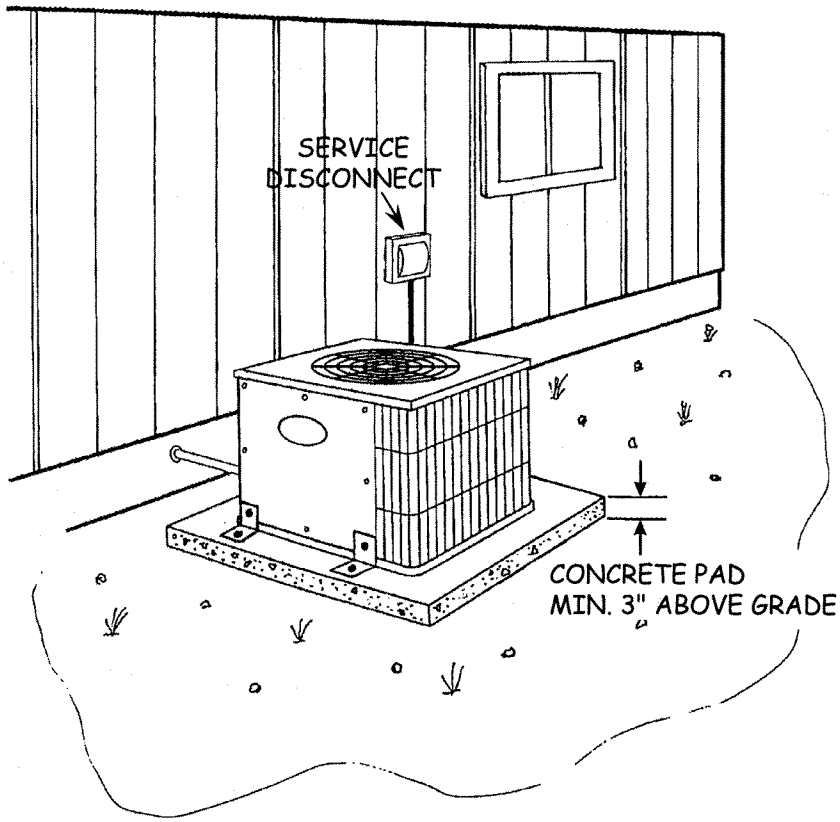

14. FUEL-GAS PIPING

- **All Installations**
  - Gas lines, fittings and valves shall be free of leaks.
  - New lines shall be pressure-tested.

15. COMBUSTION APPLIANCE REQUIREMENTS

- **Flue and Vent Systems**
  - New flue/vent system shall be selected, installed and secured in conformance with listing specifications, manufacturer's instructions, and HCD requirements.
- **Combustion Air**
  - Combustion air for installed units, and all other appliances sharing the same space/enclosure, shall be supplied in conformance with manufacturer's instructions and HCD requirements.
  - Combustion air vents shall be free of obstructions that interfere with proper venting.

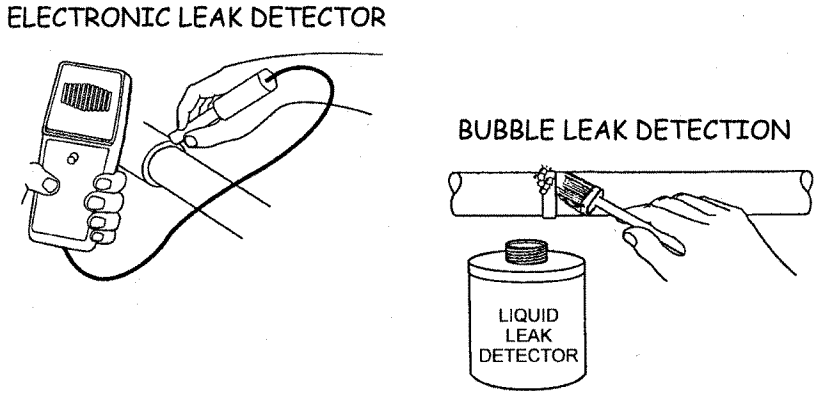

METHODS FOR FINDING LEAKS IN GAS LINES, FITTINGS, AND VALVES

16. THERMOSTAT INSTALLATION

- **Location and Mounting**
  - New thermostat shall be installed at existing location unless affected by drafts, heat from direct sun, or adjacent appliances.
  - Thermostat installed in a new location:
    - Shall be mounted with the top of thermostat 60" above the floor when occupants are not handicapped.
    - May me installed as low as 48" above the floor when an occupant uses a wheelchair.
  - Thermostat shall be located away from direct sunlight, doors, windows, return/supply air, appliances, and sources of electrical interference.
  - Mounting bracket shall be securely attached to wall with screws for wood, or appropriate anchors for drywall and plaster.
  - Any holes or damage to wall from installation or removal of thermostat shall be repaired in a workmanlike manner.
- **Wiring**
  - All wiring shall be a minimum of 18 gauge and conform to manufacturer's specifications and HCD requirements.
  - Exposed wiring shall be enclosed in a raceway.
- **Programming and Operation**
  - Thermostat shall be cycled to insure proper operation of all functions.
  - Setbacks shall be programmed in accordance with customer's wishes.

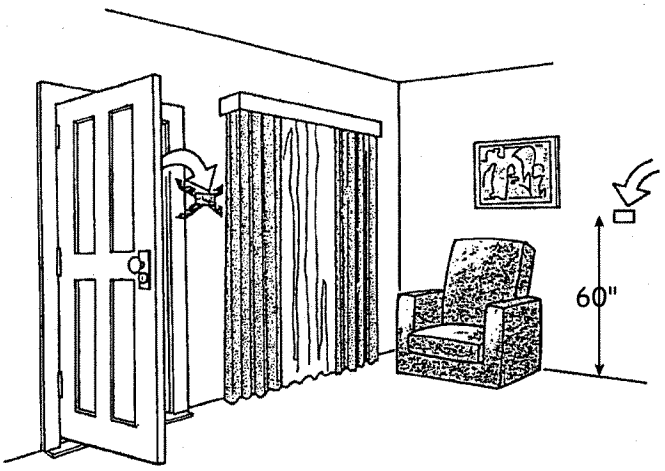

16. THERMOSTAT INSTALLATION (continued)

- **Instructions and Warranty**
  - Customer shall be provided with:
    - A demonstration with verbal instructions for operating the thermostat and installing batteries.
    - The manufacturer's written instructions and warranty.

17. POST-INSTALLATION REQUIREMENTS

- **Appliance Operation**
  - The installed unit shall be tested for proper operation.
  - Proper operation shall be explained and demonstrated to the customer, including:
    - Operation of all user-accessible controls.
    - Filter replacement.
    - Routine maintenance recommended by manufacturer.
  - Manufacturer's written instructions and warranty documents shall be supplied to the customer.

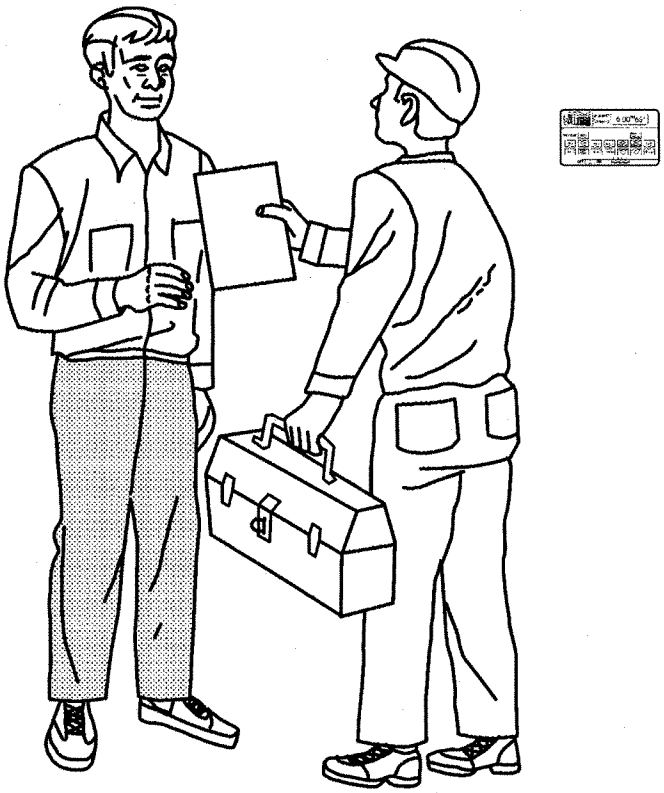

INSTRUCTIONS AND WARRANTY
PROVIDED TO CUSTOMER

17. POST-INSTALLATION REQUIREMENTS (continued)

- **Cleanup and Disposal**
  - Paint dust and chips, scraps, and other debris resulting from weatherization activities shall be cleaned up and removed from the premises—utilizing lead-safe practices when applicable.
  - Furniture and other household items moved for weatherization work shall be returned to their original positions.
  - All packing materials and installation debris shall be cleaned up and removed from the premises.
  - All replaced equipment and parts shall be removed from the premises and properly disposed of unless specified otherwise in the home improvement contract.
  - Refrigerant shall be recovered and all hazardous waste materials shall be disposed of in conformance with federal, state and local codes.

EPA

STRATOSPHERIC OZONE INFORMATION

HOT LINE

800-296-1996

INFORMATION ABOUT HANDLING REFRIGERANT AND OTHER HAZARDOUS MATERIALS IS AVAILABLE FROM EPA'S STRATOSPHERIC OONE INFORMATION HOT LINE

18. LEAD-SAFE WEATHERIZATION

- **Lead-safe practices shall be employed when working with pre-1979 painted materials per state codes T8 Section 1532.1 and T17 Section 36000, et seq.**

CALIFORNIA DEPARTMENT OF HEALTH SERVICES Childhood Lead Poison Prevention Program Lead-Related Construction Information Hot-Line 1-800-597-LEAD (1-800-597-5323) www.childlead.com	
NATIONAL LEAD INFORMATION CENTER **1-800-424-LEAD**	
EPA United States Environmental Protection Agency US EPA Region IX 75 Hawthorne St. San Francisco, CA 94105 Region IX Contact: Don Lanier (415) 744-1123	U.S. Department of Housing and Urban Development Office of Lead Hazard Control 451 7th Street, S.W., Room B-133 Washington, DC 20410 PH: 202-755-1785 FAX: 202-755-1000
www.epa.gov/lead/index.html	www.hud.gov/lea/leahome.html

SEE SEPARATE "NONFEASIBILITY CRITERIA" WORD DOCUMENT FOR THE NONFEASIBILITY PAGE TO THIS SECTION

APPENDIX -A-

COMBUSTION AND VENTILATION (CVA) AIR REQUIREMENTS FOR GAS FURNACES/HEATERS AND WATER HEATERS

APPENDIX -A-

COMBUSTION AND VENTILATION AIR (CVA) REQUIREMENTS FOR NATURAL GAS FURNACES/HEATERS & WATER HEATERS

1.0 PURPOSE

This appendix is based on Chapter 7 of the 2001 California Mechanical Code (CMC) and Chapter 3 of the 2003 International Fuel Gas Code (IFGC). It is a quick reference to determine room volume or vent size requirements for open combustion *furnaces and water heaters*. This appendix does not apply to direct vent appliances and other closed combustion units drawing air from outdoors, nor to listed cooking appliances, refrigerators, and domestic clothes dryers. *This is only a guide. Each installer is responsible for meeting all requirements of the local jurisdiction.*

2.0 DEFINITIONS (ALSO SEE CMC CHAPTER 2)

Confined Space: A room or space having a volume of *less* than 50 cubic feet per 1,000 Btu/hr of the aggregate input rating of all fuel-burning open combustion furnaces/heaters and water heaters installed in that space.

Unconfined Space: A room or space having a volume of at least 50 cubic feet per 1,000 Btu/hr of the aggregate input rating of all fuel-burning open combustion furnaces/heaters and water heaters installed in that space. Adjacent rooms communicating directly with the space and not separated by doors are considered part of the unconfined space. Applies to homes of ordinary tightness.

Homes of Ordinary Tightness: Homes not of unusually tight construction.

Homes of Unusually Tight Construction: Homes with the following construction features: (a) walls and ceilings exposed to the outside atmosphere have a continuous water vapor retarder rated 1 perm or less, with all openings sealed; (b) weatherstripping on openable windows and doors; and (c) caulking or sealants are applied to areas such as joints around window and door frames, between sole plates and floors, between wall-ceiling joints, between wall panels, and at plumbing/wiring penetrations & other openings. Combustion air must be obtained from outdoors.

NFVA: Net Free Venting Area. This is the area of the vent opening *minus* the blocking effect of the screen and/or louvers present in the vent (see "Louvers, Grilles, and Screens" below).

3.0 CALIFORNIA MECHANICAL CODE (CMC) CRITERIA

Some code requirements for combustion air are addressed in this section and in footnotes on page A-3. Formulas used to calculate room volume and vent size are shown in Section 4.0.

Louvers, Grilles, and Screens. (CMC 702.3 & 2003 IFGC 304.10) Combustion air openings to *outdoors* must be covered with 1/4-inch mesh (except ducts that terminate in an attic, which are not screened on either end). The blocking affect of louvers, grilles, and screens must be deducted from the area of a vent opening to determine the "net free" venting area (NFVA) of the vent. When NFVA is not labeled on the vent, it may be estimated using the following table. Multiply the area of the *opening* by the applicable "reduction factor" from the table. Example: If a vent with 1/4" screen and metal louvers has a 100 sq. in. opening, then [(100 sq. in.) x (0.75) = 75 sq. in. NFVA].

SUGGESTED SCREEN AND LOUVER REDUCTION FACTORS FOR COMBUSTION AIR VENTS

1/4" Screen (Hardware Cloth)	1/4" Screen with Metal Louvers	1/4" Screen with Wood Louvers	Insect Screen (Mesh under 1/4")	Insect Screen w/ Metal Louvers	Insect Screen w/ Wood Louvers
0.90 (90%)	**0.75** (75%)	**0.25** (25%)	**0.50** (50%)	**0.50** (50%)	**0.25** (25%)

Prohibited Sources. (CMC 703.3) Vent openings and ducts cannot connect an appliance enclosure with a space in which the operation of a fan may adversely affect the flow of combustion air.

Combustion-Air Ducts. (CMC Section 704) Ducts must be galvanized steel or equivalent corrosion-resistant material approved for the use. A duct must have the same cross-sectional area as the free area of the opening to which it connects.

4.0 USING THE CVA REQUIREMENTS MATRIX (PAGE A-3)

Column [A] in the CVA Requirements matrix lists several Btu/hour Input Rating totals. Columns [B] through [F] list corresponding room volumes (cu. ft.) and vent and duct sizes (sq. in. of NFVA). For Btu/hr totals not shown, the required room volume or vent/duct NFVA can be calculated using the applicable formula from the table below. (Note: "KBtu" = 1,000 Btu/hr Input.)

Column	Application	CVA Requirement [Formula in Brackets]
[B]	All air from **indoors**, based on room volume [1]	**50 cu. ft. of room volume per 1,000 Btu/hr input. [NFVA = KBtu x 50] or [Btu / 2, and drop last zero]**
[C]	All air from **indoors**, with 1 upper vent (within 12" of the ceiling) and 1 lower vent (within 12" of the floor) venting to another room/space	When volume of the room/space containing an appliance is inadequate, an upper and a lower vent may be installed into an adjacent space with sufficient volume. Each vent must provide **1 sq. in NFVA per 1,000 Btu/hr input**, with a *minimum* size of 100 sq. in. **[NFVA = 100 + KBtu over 100]**
[D]	All air from **outdoors**, using 1 upper vent or duct [2]	1 upper opening (or vertical or horizontal duct) may be used to provide the combustion air (lower vent not required). The vent/duct must provide **1 sq. in NFVA per 3,000 Btu/hr input. [NFVA = KBtu / 3]**
[E]	All air from **outdoors**, using 1 upper vent or vertical duct and 1 lower vent or vertical duct [3]	Each opening and *vertical* duct must provide **1 sq. in NFVA per 4,000 Btu/hr input. [NFVA = KBtu / 4]**
[F]	All air from **outdoors**, using 1 upper horizontal duct and 1 lower horizontal duct [3]	Each *horizontal* duct must provide **1 sq. in NFVA per 2,000 Btu/hr input. [NFVA = KBtu / 2]**

[1] When total indoor volume is inadequate, supplementary air may be obtained from *outdoors* through a duct or opening with NFVA of 1 sq. in. per 5,000 Btu/hr input (per CMC Table 7-1). (Also see 2003 IFGC 304.7.)

[2] See footnote 1 on page A-3 regarding criteria for using just *one upper* combustion air vent or duct.

[3] See footnote 5 on page A-3 about acceptable locations for upper and lower vents and ducts to outdoors.

The following table shows **cross-sectional area of a duct** when the diameter or circumference is known. [Duct area equals πr^2, or 3.1415 x the radius squared (radius is half the diameter). When circumference is known, divide it by 3.1415 to determine the diameter, then calculate the area.] Example: A duct's diameter is 6" (or circumference is 18.8"). Go to 6" in the top row, and find the area (28.3 sq. in.) directly below. Or go to 18.8" in the bottom row, and find 28.3 directly above.

Duct Diameter (in.)	3"	4"	5"	6"	7"	8"	9"	10"
Duct Area (sq. in.)	**7.1**	**12.6**	**19.6**	**28.3**	**38.5**	**50.3**	**63.6**	**78.5**
Duct Circumference (in.)	9.4"	12.6"	15.7"	18.8"	22.0"	25.1"	28.3"	31.4"

CVA REQUIREMENTS FOR GAS FURNACES/HEATERS AND WATER HEATERS

OPEN COMBUSTION FURNACE AND/OR WATER HEATER IN A ROOM/SPACE	HOMES OF **ORDINARY TIGHTNESS***, WITH APPLIANCES LOCATED IN A CONFINED SPACE*, AND ALL COMBUSTION AIR OBTAINED FROM INDOORS		HOMES OF **UNUSUALLY TIGHT CONSTRUCTION***, OR OF **INADEQUATE VOLUME**, WITH ALL COMBUSTION AIR OBTAINED FROM OUTDOORS		
			[D] 1 Upper Opening (or 1 Vertical or Horizontal Duct) [1,2,3] [E] 1 Upper Opening or **Vertical** Duct and 1 Lower Opening or Vertical Duct [2,3,4]		TWO **HORIZONTAL** DUCTS [2,3]
TOTAL INPUT	MIN. ROOM VOLUME	MIN. NFVA* PER VENT	MIN. NFVA* FOR **1** VENT/**VERTICAL** DUCT	MIN. NFVA* FOR EACH OF **2** VENTS/**VERTICAL** DUCTS	REQUIRED NFVA* PER DUCT FOR **2** DUCTS
[A] BTU/HR	**[B] CU. FT.**	**[C] SQ. IN.**	**[D] SQ. IN.**	**[E] SQ. IN.**	**[F] SQ. IN.**
20,000	1,000	100	6.7**	5.0**	10.0
25,000	1,250	100	8.3**	6.3**	12.5
30,000	1,500	100	10.0	7.5**	15.0
35,000	1,750	100	11.7	8.8**	17.5
40,000	2,000	100	13.3	10.0	20.0
45,000	2,250	100	15.0	11.3	22.5
50,000	2,500	100	16.7	12.5	25.0
55,000	2,750	100	18.3	13.8	27.5
60,000	3,000	100	20.0	15.0	30.0
65,000	3,250	100	21.7	16.3	32.5
70,000	3,500	100	23.3	17.5	35.0
75,000	3,750	100	25.0	18.8	37.5
80,000	4,000	100	26.7	20.0	40.0
85,000	4,250	100	28.3	21.3	42.5
90,000	4,500	100	30.0	22.5	45.0
95,000	4,750	100	31.7	23.8	47.5
100,000	5,000	100	33.3	25.0	50.0
105,000	5,250	105	35.0	26.3	52.5
110,000	5,500	110	36.7	27.5	55.0
115,000	5,750	115	38.3	28.8	57.5
120,000	6,000	120	40.0	30.0	60.0
125,000	6,250	125	41.7	31.3	62.5
130,000	6,500	130	43.3	32.5	65.0
135,000	6,750	135	45.0	33.8	67.5
140,000	7,000	140	46.7	35.0	70.0
145,000	7,250	145	48.3	36.3	72.5
150,000	7,500	150	50.0	37.5	75.0
155,000	7,750	155	51.7	38.8	77.5
160,000	8,000	160	53.3	40.0	80.0

[1]Just one opening (or one vertical or horizontal duct) in or within 12" of the ceiling is allowed when the appliance has clearances of 1" on sides and back and 6" in front. Vent/duct NFVA must equal the sum of the vent connector areas.

[2]Combustion air must be obtained air from outdoors or from spaces freely communicating with outdoors.

[3]Upper vent/duct shall be installed in the ceiling or within 12" of the ceiling, and lower vent/duct shall be in the floor or within 12" of the floor. However, a pre-existing upper vent is acceptable at any location higher than the draft hood.

[4]Crawl space must have free flow of air and unobstructed openings to outdoors (should be screened with 1/4" mesh) on opposite sides which, on each side, provide 1.5 sq. ft. NFVA per 25 liner feet of mobile home length.

*See definitions on page A-1. **The minimum cross-sectional dimension of **ducts** is 3". Minimum **rectangular duct** is 3"x3" (**9.0 sq. in.**); minimum **round duct** is 3" diameter (πr^2 = 3.1415 x 1.5" x 1.5" = **7.07 sq. in.**).

APPENDIX -B-

METHODS FOR ESTIMATING AND MEASURING AIRFLOW

CONTENTS

PART I: SUGGESTED METHODS FOR ESTIMATING AIRFLOW

1. Air Conditioning Capacity (Tons)
   - The Preston Guide or Carrier Blue Book
   - Model Number Nomenclature
2. Heating System Capacity (kBtuh)
   - Btu Output of Gas Furnace
   - Wattage of Electric Furnace

PART II: APPROVED METHODS FOR MEASURING AIRFLOW

1. Flow Grid Measurement
2. Plenum Pressure Matching Measurement (Duct Tester Used as a Powered Capture Hood)
3. Using A Flow Capture Hood

METHODS FOR ESTIMATING AND MEASURING AIRFLOW

PART I – METHODS FOR *ESTIMATING* AIRFLOW

1. METHODS

- **The following methods are outlined in this Appendix:**
  - Air Conditioning Capacity (Tons)
    - The Preston Guide or Carrier Blue Book
    - Model Number Nomenclature
  - Heating System Capacity (kBtuh Output)
    - Btuh Output of Gas Furnace
    - Wattage of Electric Furnace
- **Air Conditioner or Heat Pump**
  - AC/HP unit capacity may be determined by the following methods using information obtained from the condenser nameplate:
    - The Preston Guide or Carrier Blue Book
    - Model Number Nomenclature
- **Gas or Electric Furnace**
  - Furnace capacity may be determined by using the unit's Btuh Output.
    - Gas: Directly from the nameplate
    - Electric: Wattage converted to Btuh Output

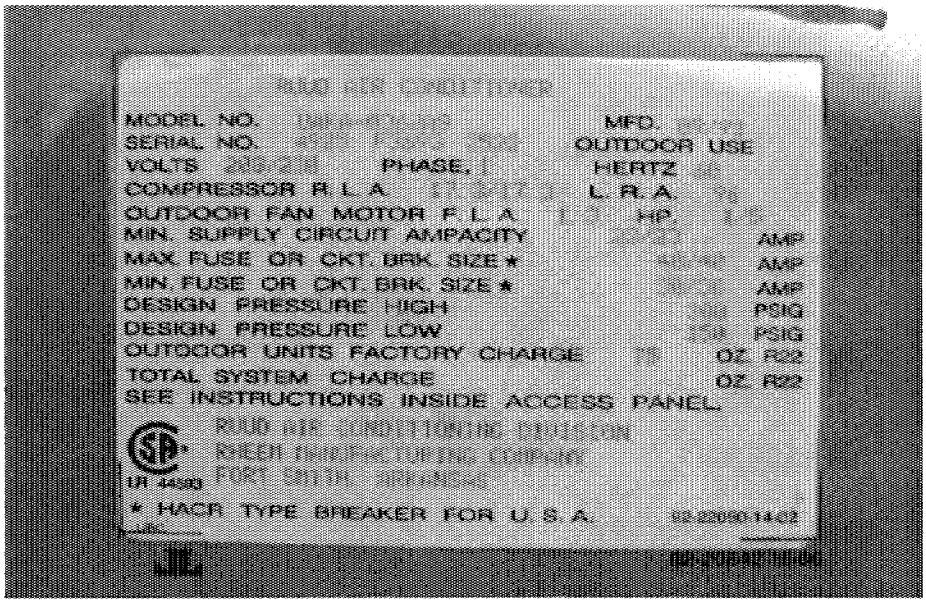

EXAMPLE OF A CONDENSER NAMEPLATE

2. AIR CONDITIONER AND HEAT PUMP UNITS

- **<u>Method A</u>—Preston Guide or Carrier Bluebook**
  - **Step A-1:** Determine the model number and date of manufacture from the condenser nameplate.

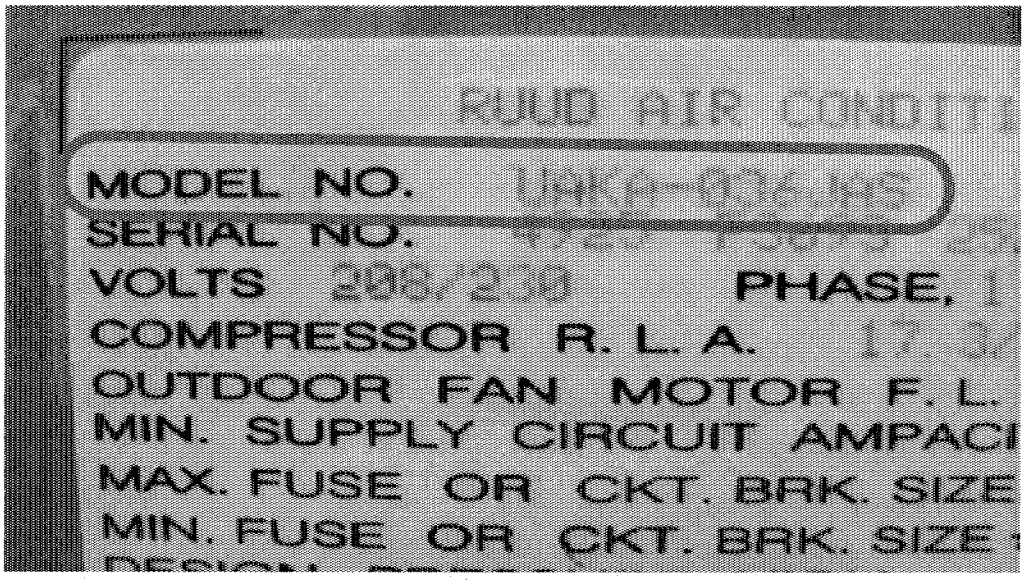

NAMEPLATE SHOWS MODEL NUMBER TO BE "UAKA-036JAS"

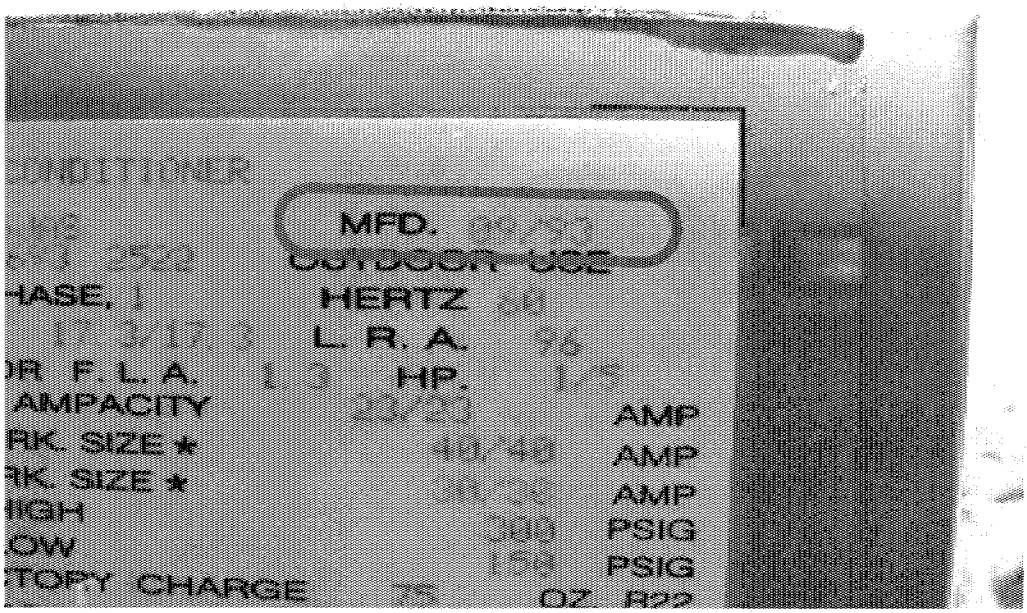

NAMEPLATE SHOWS DATE OF MANUFACTURE TO BE "09/93"

2. AIR CONDITIONER AND HEAT PUMP UNITS (continued)

- **Method A—Preston Guide or Carrier Bluebook (continued)**
  - **Step A-2:** Check the Preston Guide (or Carrier Bluebook) to determine cooling capacity of the unit, based on model number and date of manufacture.
    - Find model number UAKA-036JA manufactured in 1993.
    - Find cooling capacity, which in this example is 34,400 Btu.

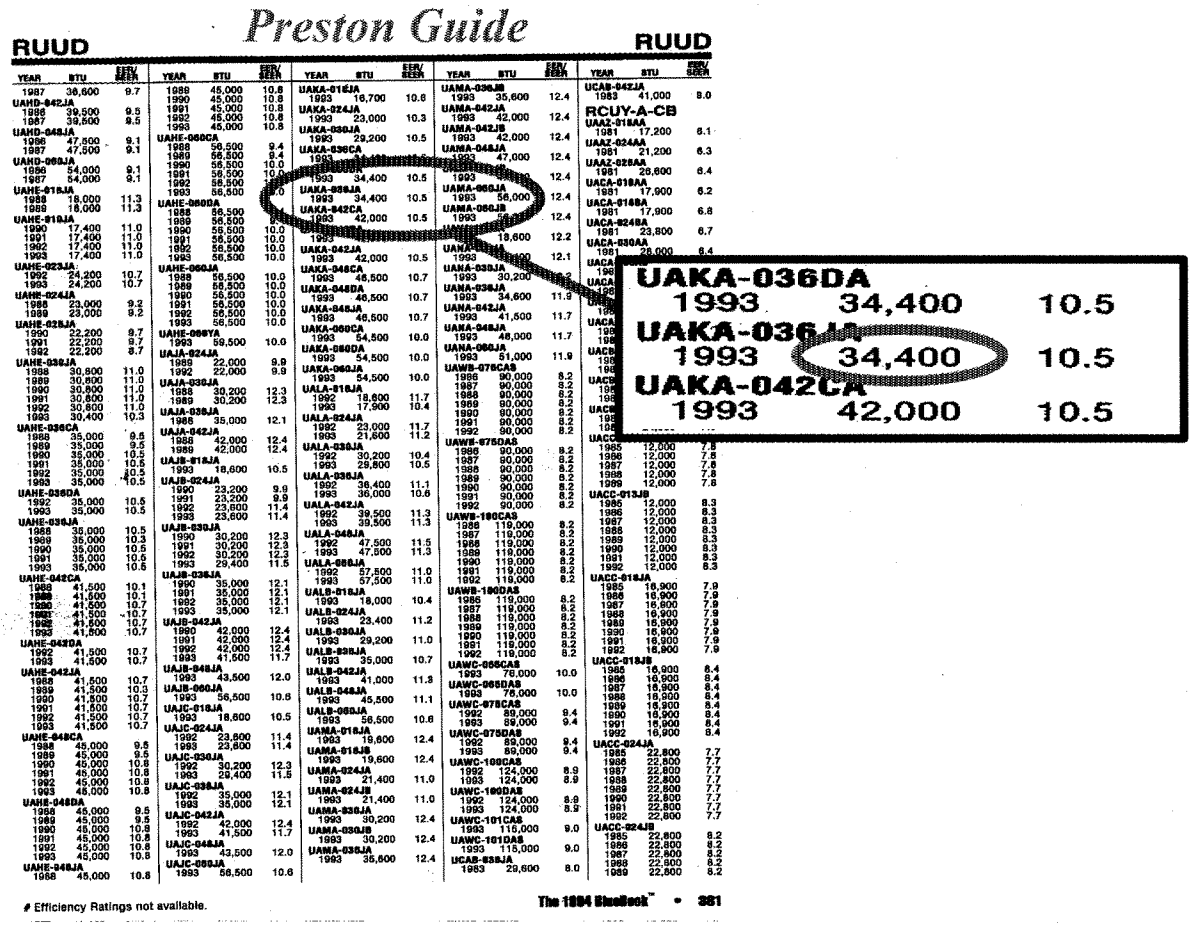

Preston Guide

RUUD

YEAR	BTU	EER/SEER
1987	36,600	9.7
UAHD-042JA		
1986	39,500	9.5
1987	39,500	9.5
UAHD-048JA		
1986	47,500	9.1
1987	47,500	9.1
UAHD-060JA		
1986	54,000	9.1
1987	54,000	9.1
UAHE-018JA		
1988	18,000	11.3
1989	18,000	11.3
UAHE-019JA		
1990	17,400	11.0
1991	17,400	11.0
1992	17,400	11.0
1993	17,400	11.0
UAHE-023JA		
1992	24,200	10.7
1993	24,200	10.7
UAHE-024JA		
1988	23,000	9.2
1989	23,000	9.2
UAHE-025JA		
1990	22,200	9.7
1991	22,200	9.7
1992	22,200	9.7
UAHE-030JA		
1988	30,800	11.0
1989	30,800	11.0
1990	30,800	11.0
1991	30,800	11.0
1992	30,800	11.0
1993	30,400	10.3
UAHE-036CA		
1988	35,000	9.5
1989	35,000	9.5
1990	35,000	10.5
1991	35,000	10.5
1992	35,000	10.5
1993	35,000	10.5
UAHE-036DA		
1992	35,000	10.5
1993	35,000	10.5
UAHE-036JA		
1988	35,000	10.5
1989	35,000	10.3
1990	35,000	10.5
1991	35,000	10.5
1993	35,000	10.5
UAHE-042CA		
1988	41,500	10.1
1989	41,500	10.1
1990	41,500	10.7
1991	41,500	10.7
1992	41,500	10.7
1993	41,500	10.7
UAHE-042DA		
1992	41,500	10.7
1993	41,500	10.7
UAHE-042JA		
1988	41,500	10.7
1989	41,500	10.3
1990	41,500	10.7
1991	41,500	10.7
1992	41,500	10.7
1993	41,500	10.7
UAHE-048CA		
1988	45,000	9.5
1989	45,000	9.5
1990	45,000	10.8
1991	45,000	10.8
1992	45,000	10.8
1993	45,000	10.8
UAHE-048DA		
1988	45,000	9.5
1989	45,000	9.5
1990	45,000	10.8
1991	45,000	10.8
1992	45,000	10.8
1993	45,000	10.8
UAHE-048JA		
1988	45,000	10.8
1988	45,000	10.8
1990	45,000	10.8
1991	45,000	10.8
1992	45,000	10.8
1993	45,000	10.8
UAHE-060CA		
1988	56,500	9.4
1989	56,500	9.4
1990	56,500	10.0
1991	56,500	10.0
1992	56,500	10.0
1993	56,500	10.0
UAHE-060DA		
1988	56,500	9.4
1989	56,500	9.4
1990	56,500	10.0
1991	56,500	10.0
1992	56,500	10.0
1993	56,500	10.0
UAHE-060JA		
1988	56,500	10.0
1989	56,500	10.0
1990	56,500	10.0
1991	56,500	10.0
1992	56,500	10.0
1993	56,500	10.0
UAHE-060YA		
1993	59,500	10.0
UAJA-024JA		
1989	22,000	9.9
1992	22,000	9.9
UAJA-030JA		
1988	30,200	12.3
1989	30,200	12.3
UAJA-036JA		
1988	35,000	12.1
UAJA-042JA		
1988	42,000	12.4
1989	42,000	12.4
UAJB-018JA		
1993	18,600	10.5
UAJB-024JA		
1990	23,200	9.9
1991	23,200	9.9
1992	23,600	11.4
1993	23,600	11.4
UAJB-030JA		
1990	30,200	12.3
1991	30,200	12.3
1992	30,200	12.3
1993	29,400	11.5
UAJB-036JA		
1990	35,000	12.1
1991	35,000	12.1
1992	35,000	12.1
1993	35,000	12.1
UAJB-042JA		
1990	42,000	12.4
1991	42,000	12.4
1992	42,000	12.4
1993	41,500	11.7
UAJB-048JA		
1993	43,500	12.0
UAJB-060JA		
1993	56,500	10.6
UAJC-018JA		
1993	18,600	10.5
UAJC-024JA		
1992	23,600	11.4
1993	23,600	11.4
UAJC-030JA		
1992	30,200	12.3
1993	29,400	11.5
UAJC-036JA		
1992	35,000	12.1
1993	35,000	12.1
UAJC-042JA		
1992	42,000	12.4
1993	41,500	11.7
UAJC-048JA		
1993	43,500	12.0
UAJC-060JA		
1993	56,500	10.6
UAKA-018JA		
1993	18,700	10.6
UAKA-024JA		
1993	23,000	10.3
UAKA-030JA		
1993	29,200	10.5
UAKA-036CA		
1993	[illegible]	[illegible]
UAKA-036DA		
1993	34,400	10.5
UAKA-036JA		
1993	34,400	10.5
UAKA-042CA		
1993	42,000	10.5
UAKA-042DA		
1993	[illegible]	[illegible]
UAKA-042JA		
1993	42,000	10.5
UAKA-048CA		
1993	46,500	10.7
UAKA-048DA		
1993	46,500	10.7
UAKA-048JA		
1993	46,500	10.7
UAKA-060CA		
1993	54,500	10.0
UAKA-060DA		
1993	54,500	10.0
UAKA-060JA		
1993	54,500	10.0
UALA-018JA		
1992	18,600	11.7
1993	17,900	10.4
UALA-024JA		
1992	23,000	11.7
1993	21,600	11.2
UALA-030JA		
1992	30,200	10.4
1993	29,800	10.5
UALA-036JA		
1992	36,400	11.1
1993	36,000	10.6
UALA-042JA		
1992	39,500	11.3
1993	39,500	11.3
UALA-048JA		
1992	47,500	11.5
1993	47,500	11.3
UALA-060JA		
1992	57,500	11.0
1993	57,500	11.0
UALB-018JA		
1993	18,000	10.4
UALB-024JA		
1993	23,400	11.2
UALB-030JA		
1993	29,200	11.0
UALB-036JA		
1993	35,000	10.7
UALB-042JA		
1993	41,000	11.3
UALB-048JA		
1993	45,500	11.1
UALB-060JA		
1993	56,500	10.6
UAMA-018JA		
1993	19,600	12.4
UAMA-018JB		
1993	19,600	12.4
UAMA-024JA		
1993	21,400	11.0
UAMA-024JB		
1993	21,400	11.0
UAMA-030JA		
1993	30,200	12.4
UAMA-030JB		
1993	30,200	12.4
UAMA-036JA		
1993	35,600	12.4
UAMA-036JB		
1993	35,600	12.4
UAMA-042JA		
1993	42,000	12.4
UAMA-042JB		
1993	42,000	12.4
UAMA-048JA		
1993	47,000	12.4
UAMA-048JB		
1993	[illegible]	12.4
UAMA-060JA		
1993	56,000	12.4
UAMA-060JB		
1993	[illegible]	12.4
UAMA-[illegible]	18,600	12.2
UAMA-[illegible]	[illegible]	12.1
UAMA-030JA		
1993	30,200	[illegible]
UAMA-036JA		
1993	34,600	11.9
UAMA-042JA		
1993	41,500	11.7
UAMA-048JA		
1993	46,000	11.7
UAMA-060JA		
1993	51,000	11.9
UAWB-075CAS		
1986	90,000	8.2
1987	90,000	8.2
1988	90,000	8.2
1989	90,000	8.2
1990	90,000	8.2
1991	90,000	8.2
1992	90,000	8.2
UAWB-075DAS		
1986	90,000	8.2
1987	90,000	8.2
1988	90,000	8.2
1989	90,000	8.2
1990	90,000	8.2
1991	90,000	8.2
1992	90,000	8.2
UAWB-100CAS		
1986	119,000	8.2
1987	119,000	8.2
1988	119,000	8.2
1989	119,000	8.2
1990	119,000	8.2
1991	119,000	8.2
1992	119,000	8.2
UAWB-100DAS		
1986	119,000	8.2
1987	119,000	8.2
1988	119,000	8.2
1989	119,000	8.2
1990	119,000	8.2
1991	119,000	8.2
1992	119,000	8.2
UAWC-055CAS		
1993	76,000	10.0
UAWC-055DAS		
1993	76,000	10.0
UAWC-075CAS		
1992	89,000	9.4
1993	89,000	9.4
UAWC-075DAS		
1992	89,000	9.4
1993	89,000	9.4
UAWC-100CAS		
1992	124,000	8.9
1993	124,000	8.9
UAWC-100DAS		
1992	124,000	8.9
1993	124,000	8.9
UAWC-101CAS		
1993	116,000	9.0
UAWC-101DAS		
1993	116,000	9.0
UCAB-035JA		
1993	29,600	8.0
UCAB-042JA		
1993	41,000	9.0
RCUY-A-CB		
UAAZ-018AA		
1981	17,200	6.1
UAAZ-024AA		
1981	21,200	6.3
UAAZ-025AA		
1981	26,600	6.4
UACA-018AA		
1981	17,900	6.2
UACA-018BA		
1981	17,900	6.8
UACA-024BA		
1981	23,800	6.7
UACA-030AA		
1981	28,000	6.4
UACA[illegible]		
198[illegible]		
UACA[illegible]		
198[illegible]		
UACA[illegible]		
198[illegible]		
198[illegible]		
198[illegible]		
UACB[illegible]		
198[illegible]		
UACB[illegible]		
198[illegible]		
198[illegible]		
UACC[illegible]		
1985	12,000	7.8
1986	12,000	7.8
1987	12,000	7.8
1988	12,000	7.8
1989	12,000	7.8
UACC-013JB		
1985	12,000	8.3
1986	12,000	8.3
1987	12,000	8.3
1988	12,000	8.3
1989	12,000	8.3
1990	12,000	8.3
1991	12,000	8.3
1992	12,000	8.3
UACC-018JA		
1985	16,900	7.9
1986	16,900	7.9
1987	16,900	7.9
1988	16,900	7.9
1989	16,900	7.9
1990	16,900	7.9
1991	16,900	7.9
1992	16,900	7.9
UACC-018JB		
1985	16,900	8.4
1986	16,900	8.4
1987	16,900	8.4
1988	16,900	8.4
1989	16,900	8.4
1990	16,900	8.4
1991	16,900	8.4
1992	16,900	8.4
UACC-024JA		
1985	22,800	7.7
1986	22,800	7.7
1987	22,800	7.7
1988	22,800	7.7
1989	22,800	7.7
1990	22,800	7.7
1991	22,800	7.7
1992	22,800	7.7
UACC-024JB		
1985	22,800	8.2
1986	22,800	8.2
1987	22,800	8.2
1988	22,800	8.2
1989	22,800	8.2

UAKA-036DA 1993 34,400 10.5
UAKA-036JA 1993 34,400 10.5
UAKA-042CA 1993 42,000 10.5

Efficiency Ratings not available.

The 1994 Bluebook™ • 381

DATA FROM THE PRESTON GUIDE SHOWS UNITS COOLING CAPACITY TO BE 34,000 BTU

2. AIR CONDITIONER AND HEAT PUMP UNITS (continued)

- **Method A—Preston Guide or Carrier Bluebook (continued)**
  - **Step A-3:** Calculate cooling capacity in tons based on KBtu.
    - Per the Preston Guide, unit cooling capacity = 34,400 Btu
    - Divide Unit Capacity by 12,000 Btu/ton to convert Btu to tons: [34,400 Btu ÷ 12,000 Btu/ton = 2.87 tons]
    - Establish tons of cooling capacity:
      - Round up to 3 tons, or
      - Find "Nominal Tons" using the chart in Figure B-1.
- **Method B—Model Number Nomenclature**
  - This method may be used when KBtu can be determined from the model number.
  - **Step B-1:** Locate model number on the condenser name plate.
    - Refer to the nameplate pictured on page B-2 and B3.
    - In this example, the model number is "UAKA-0**36**JAS".
  - **Step B-2:** Establish cooling capacity in Btu.
    - **36** is the capacity of the unit, and
    - That is equivalent to 36,000 Btu.
  - **Step B-3:** Divide unit capacity in Btu by 12,000 Btu/ton to determine cooling capacity in tons:
    - [36,000 Btu ÷ 12,000 Btu/ton = 3 tons]
    - Cooling capacity is 3 tons.

FIGURE B-1: NOMINAL TONS BASED ON UNIT CAPACITY IN BTU

UNIT CAPACITY (BTU)	CALCULATED TONS	NOMINAL TONS
14,000 – 21,999	1.17 – 1.82	1.5
22,000 – 26,999	1.83 – 2.24	2.0
27,000 – 32,999	2.25 – 2.74	2.5
33,000 – 38,999	2.75 – 3.24	3.0
39,000 – 44,999	3.25 – 3.74	3.5
45,000 – 53,999	3.75 – 4.49	4.0
54,000 – 62,999	4.50 – 5.24	5.0

3. FURNACES

- **System G: Determining Estimated Airflow for Gas Furnaces**
  - **Step G-1:** Determine Btuh output from unit name plate.
    - Locate Btuh output on the nameplate (see picture below).
      - Output is 80,000 Btuh in this example.
    - If only Input is listed, Output = Input x (% efficiency).
      - Example: (100 kBtuh Input) x (0.80 AFUE) = 80 kBtuh.
  - **Step G-2:** Convert Btuh output to estimated airflow in cfm.
    - Assume 21.7 cfm per kBtuh.
    - Use the following equation to determine estimated airflow: [Output kBtuh x 21.7 cfm/kBtuh = cfm system airflow]
    - Example: [80 (kBtuh) x 21.7 (cfm/KBtu) = 1,736 cfm system airflow]

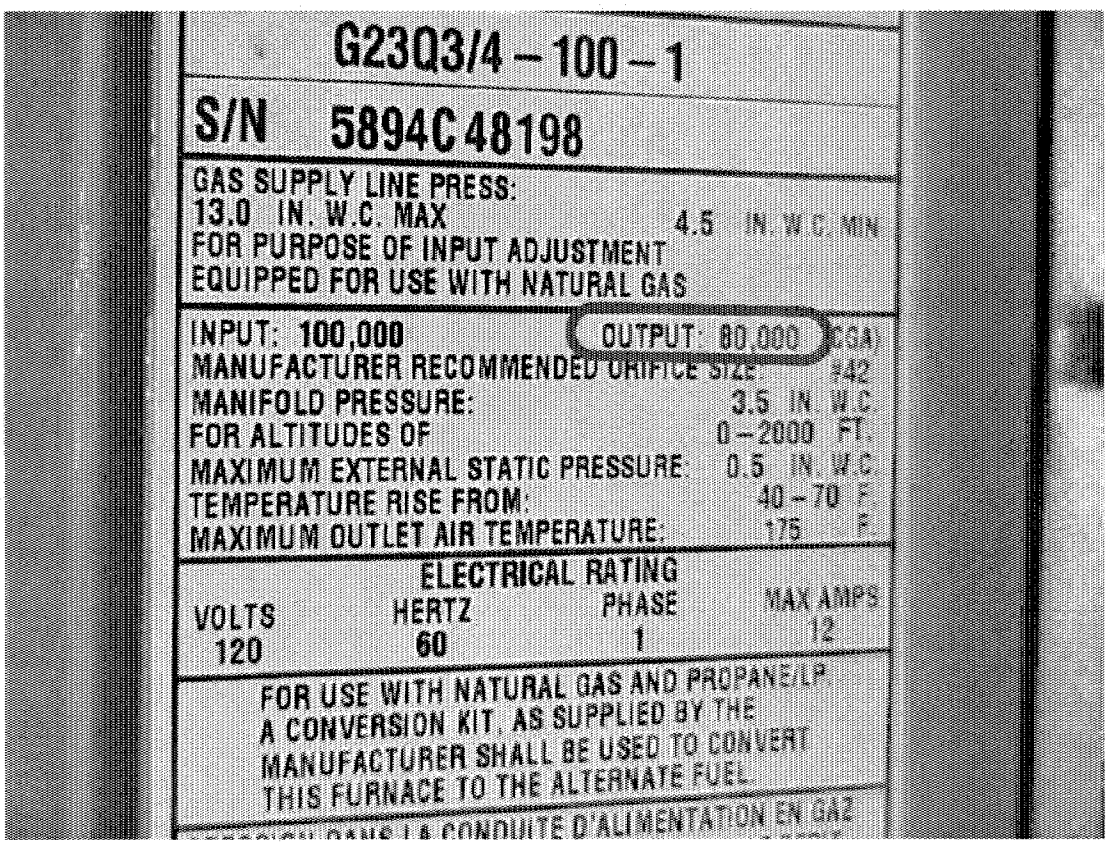

EXAMPLE OF A GAS FURNACE NAMEPLATE SHOWING HEATING CAPACITY (OUTPUT) OF 80,000 BTUH

3. **FURNACES (continued)**
   - **System E: Determining Estimated Airflow for Electric Furnaces**
     - **Step E-1:** Determine wattage from unit name plate.
       - Locate heating capacity (in kilowatts) on the nameplate (see graphic below).
       - Heating Capacity (output) is 20 kilowatts in this example

       - **Step E-2:** Convert kilowatts to kBtuh output to estimated airflow in cfm, assuming 3.413 kBtuh per kilowatt and 95% efficiency.
       - Use the following formula to convert wattage to kBtuh output:
         - [(watts x 3.413 x 0.95) ÷ 1,000 = kBtuh output] or
         - [(kilowatts x 3.242) = kBtuh output]
         - In this example:
           [20 (kW) x 3.242 = 64.84 kBtuh output].
     - **Step E-3:** Convert kBtuh output to estimated airflow in cfm.
       - Assume 21.7 cfm per kBtuh.*
       - Use the following equation to determine estimated airflow:
         [kBtuh x 21.7 cfm/kBtuh = cfm system airflow]
       - Example:
         [64.84 (kBtuh) x 21.7 (cfm/KBtu) = 1407 cfm system airflow]

ELECTRIC FURNACE
SIMULATED NAMEPLATE

MANUFACTURED BY XYZ FURNACE CORP.

MODEL # 000000000 SERIAL # 00000000

HEATING CAPACITY: 20 KILOWATTS

EXAMPLE OF AN ELECTRIC FURNACE NAMEPLATE
SHOWING HEATING CAPACITY OF 20 KILOWATTS

*May be used until CEC determines cfm/kBtuh default for electric furnaces.

PART II – METHODS FOR *MEASURING* AIRFLOW

Methods for measuring HVAC system airflow (fan flow) presented in this appendix are methods approved by the California Energy Commission and described in Appendix RE-2005 of the Title 24 "Residential Alternative Calculation Method (ACM) Approval Manual for the 2005 Building Energy Efficiency Standards for Residential and Nonresidential Buildings" — Publication 400-03-003F, available online at: http://www.energy.ca.gov/title24/2005standards/index.html

1. FLOW GRID MEASUREMENT

- **Overview**
  - This method uses a "metering plate" containing "pressure sensing grids", which are directed toward the air handler.
  - The metering plate temporarily replaces the filter in a typical air handler system during the air flow measurement procedure.
    - If the filter location is directly adjacent to the air handler, the metering plate will measure the total air handler flow.
    - If the filter is located remotely at a single central return, the metering plate will measure the air flow through the central return. Airflow measurement through the central return will be very close to the total air handler air flow only if the return duct is very tight.

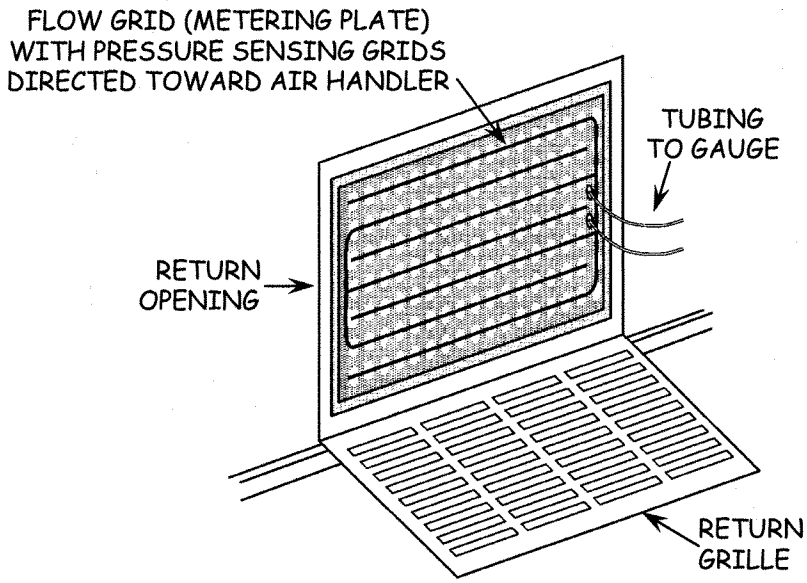

1. FLOW GRID MEASUREMENT (continued)

- **Protocol**
  - Equipment used for measurements shall meet the requirements specified in ACM Residential Manual Appendix RE-2005, §RE.3.1.3, "Flow Grid Measurement."
  - The following general guidelines are for reference only; measurement shall be:
    - Performed in accordance with test equipment manufacturer's instructions, and
    - In harmony with ACM Residential Manual Appendix RE-2005, §RE.4.1.3, "Diagnostic Fan Flow Using Flow Grid Measurement".
- **General Guidelines**
  - **Step 1:** System operating pressure shall be measured with the air handler operating at maximum speed used in the system.
    - Using a digital pressure gauge, pressure difference in Pa shall be measured between the supply plenum and the conditioned space (**P**sp) using a static pressure probe pointing into the air stream.
    - Probe may be placed in the nearest supply duct when access to the supply plenum is unavailable.
    - Probe shall be adjusted to achieve the highest pressure and then secured in place during the fan flow test.

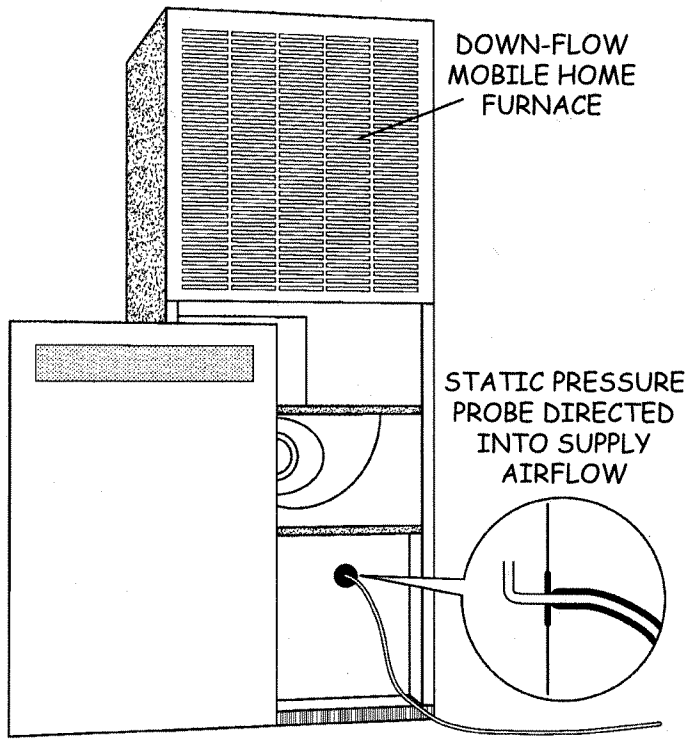

1. **FLOW GRID MEASUREMENT (continued)**
   - **General Guidelines (continued)**
     - **Step 2:** With the air handler off, the flow grid measurement sensor (metering plate) shall be installed, with the pressure sensing grids directed toward the air handler, and with no obstructions within 6" upstream or 2" downstream of the metering plates, in the best available location (filter slot or filter grille) where all system airflow passes through the flow grid.

(A) When Using DG-700 Fully-Automated Digital Gauge

- **Step A-3:** Air handler shall be operated again at the same speed as used in Step 1, and time averaging shall be lengthened as needed to maximize accuracy when readings are fluctuating.
- **Step A-4:** Measured system airflow (**Q**ah) shall be obtained from the digital pressure gauge and recorded.
- **Step A-5:** When the flow grid is installed in a remote filter grille, manufacturer's correction factor shall be used to increase accuracy.

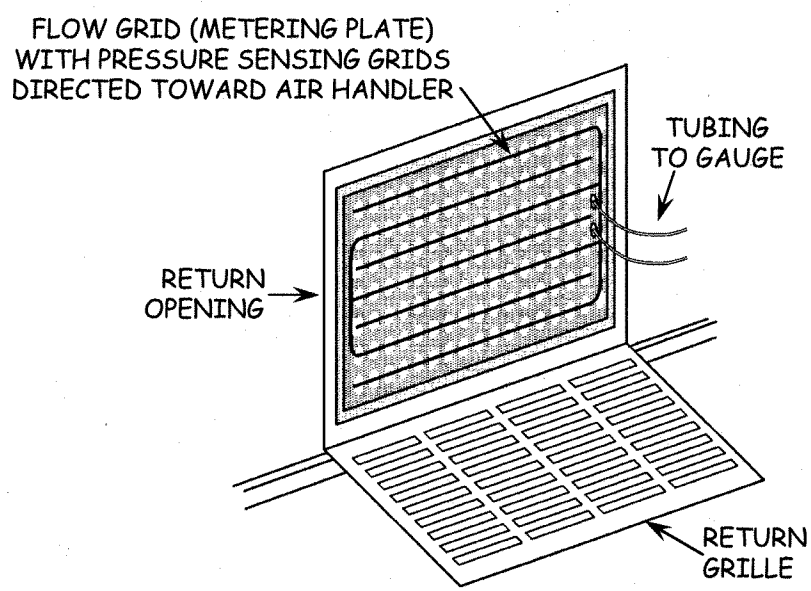

1. FLOW GRID MEASUREMENT (continued)

- **General Guidelines (continued)**

(B) When Using DG-3 Digital Gauge

- **Step B-3:** With air handler operating again at the same speed as in Step 1, measurements shall be made with the flow grid in place:
  - System operating pressure re-measured (**P**test).
  - Airflow through the flow grid measured (**Q**grid).
- **Step B-4:** System Airflow (**Q**ah) shall be calculated by:
  - Multiplying **Q**grid by equipment manufacturer's Flow Resistance Correction Factors (sample shown below), or
  - Applying the following equation to readings obtained in Steps 1 and B-3:

  System Airflow (Air Handler Flow) = **Q**ah = **Q**grid x (**P**sp/**P**test)$^{0.5}$
- **Step B-5:** When the flow grid is installed in a remote filter grille, manufacturer's correction factor shall be used to increase accuracy.

All Gauges

- **Step 6:** Adjusted Airflow shall be calculated (to correct for differences in system operating pressures measured in Steps 1 and 3) using manufacturer's flow resistance correction procedure.

Appendix B **Flow Resistance Correction Factors**

Table B.1 Flow Resistance Correction Factors (using Pascals)

TrueFlow System Operating Pressure in Pascals (TFSOP)	Normal System Operating Pressure in Pascals (NSOP)																				
	10	12	14	16	18	20	22	24	26	28	30	32	34	36	38	40	42	44	46	48	50
10	1.00	1.10	1.18	1.26	1.34	1.41	1.48	1.55	1.61	1.67	1.73	1.79	1.84	1.90	1.95	2.00	2.05	2.10	2.14	2.19	2.24
12	0.91	1.00	1.08	1.15	1.22	1.29	1.35	1.41	1.47	1.53	1.58	1.63	1.68	1.73	1.78	1.83	1.87	1.91	1.96	2.00	2.04
14	0.85	0.93	1.00	1.07	1.13	1.20	1.25	1.31	1.36	1.41	1.46	1.51	1.56	1.60	1.65	1.69	1.73	1.77	1.81	1.85	1.89
16	0.79	0.87	0.94	1.00	1.06	1.12	1.17	1.22	1.27	1.32	1.37	1.41	1.46	1.50	1.54	1.58	1.62	1.66	1.70	1.73	1.77
18	0.75	0.82	0.88	0.94	1.00	1.05	1.11	1.15	1.20	1.25	1.29	1.33	1.37	1.41	1.45	1.49	1.53	1.56	1.60	1.63	1.67
20	0.71	0.77	0.84	0.89	0.95	1.00	1.05	1.10	1.14	1.18	1.22	1.26	1.30	1.34	1.38	1.41	1.45	1.48	1.52	1.55	1.58
22	0.67	0.74	0.80	0.85	0.90	0.95	1.00	1.04	1.09	1.13	1.17	1.21	1.24	1.28	1.31	1.35	1.38	1.41	1.45	1.48	1.51
24	0.65	0.71	0.76	0.82	0.87	0.91	0.96	1.00	1.04	1.08	1.12	1.15	1.19	1.22	1.26	1.29	1.32	1.35	1.38	1.41	1.44
26	0.62	0.68	0.73	0.78	0.83	0.88	0.92	0.96	1.00	1.04	1.07	1.11	1.14	1.18	1.21	1.24	1.27	1.30	1.33	1.36	1.39
28	0.60	0.65	0.71	0.76	0.80	0.85	0.89	0.93	0.96	1.00	1.04	1.07	1.10	1.13	1.16	1.20	1.22	1.25	1.28	1.31	1.34
30	0.58	0.63	0.68	0.73	0.77	0.82	0.86	0.89	0.93	0.97	1.00	1.03	1.06	1.10	1.13	1.15	1.18	1.21	1.24	1.26	1.29
32	0.56	0.61	0.66	0.71	0.75	0.79	0.83	0.87	0.90	0.94	0.97	1.00	1.03	1.06	1.09	1.12	1.15	1.17	1.20	1.22	1.25
34	0.54	0.59	0.64	0.69	0.73	0.77	0.80	0.84	0.87	0.91	0.94	0.97	1.00	1.03	1.06	1.08	1.11	1.14	1.16	1.19	1.21
36	0.53	0.58	0.62	0.67	0.71	0.75	0.78	0.82	0.85	0.88	0.91	0.94	0.97	1.00	1.03	1.05	1.08	1.11	1.13	1.15	1.18
38	0.51	0.56	0.61	0.65	0.69	0.73	0.76	0.79	0.83	0.86	0.89	0.92	0.95	0.97	1.00	1.03	1.05	1.08	1.10	1.12	1.15
40	0.50	0.55	0.59	0.63	0.67	0.71	0.74	0.77	0.81	0.84	0.87	0.89	0.92	0.95	0.97	1.00	1.02	1.05	1.07	1.10	1.12
42	0.49	0.53	0.58	0.62	0.65	0.69	0.72	0.76	0.79	0.82	[illegible]	[illegible]	0.90	0.93	0.95	0.98	1.00	1.02	1.05	1.07	1.09
44	0.48	[illegible]	0.56	0.60	0.64	0.67	0.71	0.74	[illegible]	[illegible]	[illegible]	[illegible]	0.88	0.90	0.93	0.95	0.98	1.00	1.02	1.04	1.07
46	[illegible]	[illegible]	[illegible]	0.59	0.63	0.66	0.69	[illegible]	[illegible]	[illegible]	[illegible]	[illegible]	[illegible]	0.88	0.91	0.93	0.96	[illegible]	1.00	1.02	[illegible]
[illegible]	[illegible]	[illegible]	[illegible]	[illegible]	0.61	0.65	[illegible]	[illegible]	[illegible]	[illegible]	[illegible]	[illegible]	[illegible]	0.87	0.89	0.91	[illegible]	[illegible]	[illegible]	1.00	[illegible]
[illegible]	[illegible]	[illegible]	[illegible]	[illegible]	[illegible]	[illegible]	[illegible]	[illegible]	[illegible]	[illegible]	[illegible]	[illegible]	[illegible]	[illegible]	0.87	[illegible]	[illegible]	[illegible]	[illegible]	[illegible]	[illegible]

EXAMPLE OF FLOW RESISTANCE CORRECTION FACTORS
USED TO CALCULATE ADJUSTED AIRFLOW

2. PLENUM PRESSURE MATCHING MEASUREMENT

- **Overview**
  - This procedure is also known as "Duct Tester Used as a Powered Capture Hood."
  - The duct tester is used to pressurize the system to equal the pressure created by the air handler, so that airflow through the duct tester represents system airflow (fan flow).
- **Protocol**
  - Equipment used for measurements shall meet the requirements specified in ACM Residential Manual Appendix RE-2005, §RE.3.1.1, "Plenum Pressure Matching Measurement."
  - The following general guidelines are for reference only; measurement shall be:
    - Performed in accordance with test equipment manufacturer's instructions, and
    - In harmony with ACM Residential Manual Appendix RE-2005, §RE.4.1.2, "Diagnostic Fan Flow Using Plenum Pressure Matching".

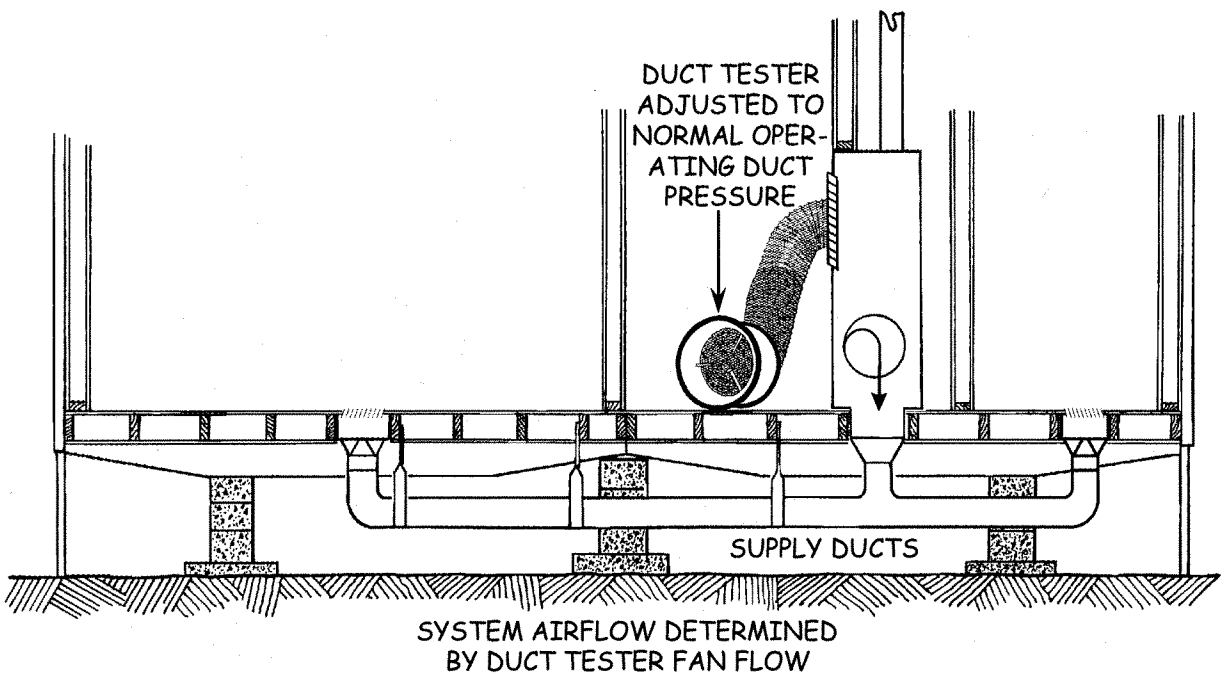

2. PLENUM PRESSURE MATCHING MEASUREMENT (continued)

- **General Guidelines**
  - **Step 1:** Supply plenum pressure test set-up:
    - Air handler shall be off.
    - Doors, windows, etc. shall be open to prevent pressure changes in the space containing the handler (e.g., outside door/window for air handler in conditioned space; or access doors, vents, etc. for air handler in garage, attic, etc.).
    - All supply and return registers shall be open, and filter(s) clean.
    - Static pressure probe, directed into the airflow, shall be inserted into the supply plenum or in a supply trunk nearby. It shall be adjusted (rotated) to achieve the highest pressure and securely attached.
    - Tubing from the probe shall be attached to **Channel A Input** tap of the digital pressure gauge, and the **Reference** tap shall be open to the conditioned space.
  - **Step 2:** With the air handler fan operating at the maximum speed used in the system (e.g., cooling speed when air conditioning is present), the pressure difference in Pa between the supply plenum and the conditioned space (**P**sp) shall be measured. **P**sp, the normal operating duct pressure, is the target pressure to be maintained during the system airflow (fan flow) tests.

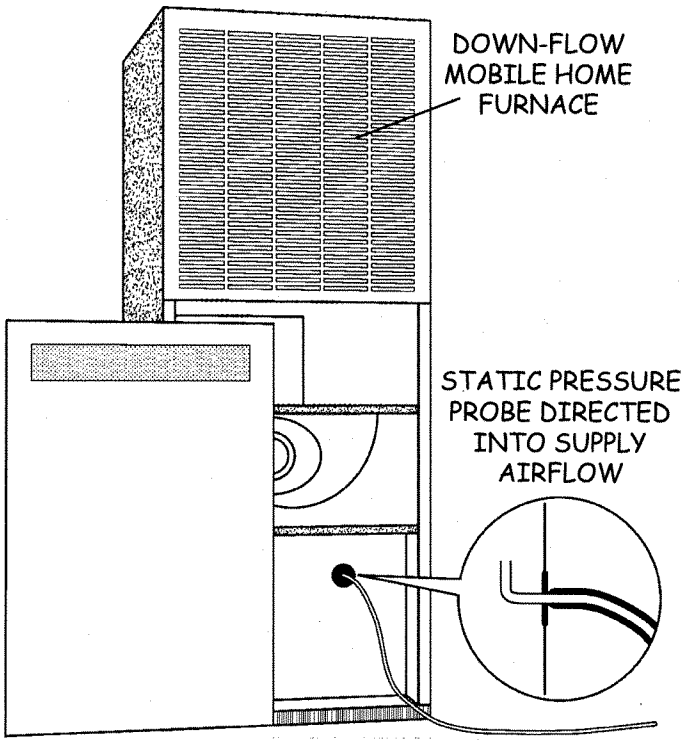

2. PLENUM PRESSURE MATCHING MEASUREMENT (continued)

- **General Guidelines for Down-Flow FAU with Central Return***
  - **Step 3:** Duct Tester set-up at air handler access:
    - The Duct Tester shall be installed on, or in place of, the louvered air handler cover panel.
    - Tubing shall connect the Duct Tester to the **Channel B Input** tap on the digital pressure gauge, and the **Reference** tap shall be open to space where the Duct Tester is located.
  - **Step 4:** With the air handler operating,
    - Duct Tester shall be turned on and adjusted until the duct pressure on **Channel A** equals the normal operating duct pressure (**P**sp) measured in Step 2.
    - Airflow through the Duct Tester shall be determined (calculated or measured using the digital gauge fan flow feature), which is the estimated cfm system airflow through the air handler (**Q**ah).
  - **Step 5:** Correction shall be made when Duct Tester cannot adequately pressurize the system to equal the normal operating duct pressure (Psp) recorded in Step 2:
    - With the Duct Tester producing the maximum attainable duct pressure on **Channel A** (**P**max), the airflow through the Duct Tester (**Q**max) shall be determined.
    - System airflow at normal operating duct pressure (**P**sp) shall be estimated using the following equation:
    - System (Air Handler) Airflow = **Q**ah = **Q**max x (**P**sp/**P**max)$^{0.5}$

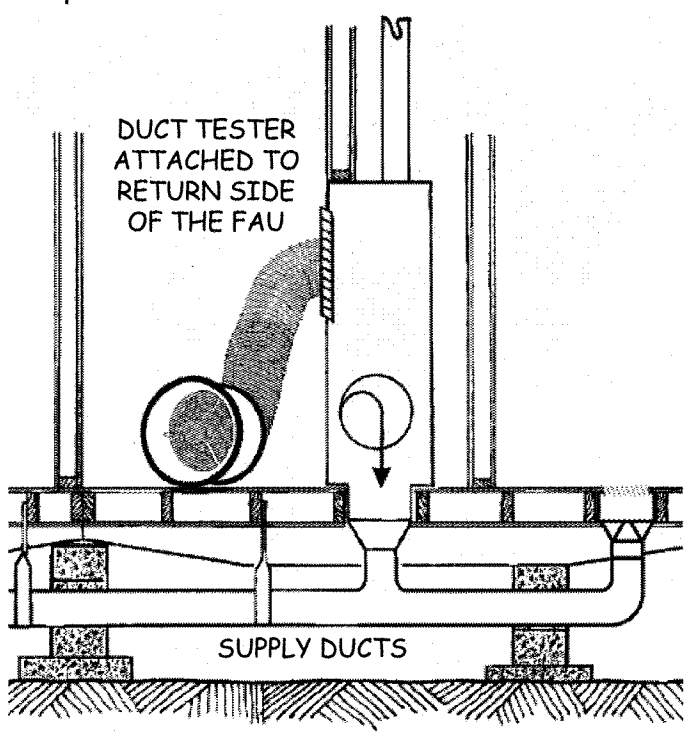

*For Up-flow furnaces, use procedures in Conventional Home Appendix D.

3. USING A FLOW CAPTURE HOOD

- **Overview**
  - The procedure utilizes a "capture flow hood" to directly measure airflow through the return or supply system.
  - The flow hood covers the entire register/grille and captures the airflow going into it.
- **Protocol**
  - Equipment used for measurements shall meet the requirements specified in ACM Residential Manual Appendix RE-2005, §RE.3.1.2, "Flow Capture Hood Measurement."
  - The following general guidelines are for reference only; measurement shall be:
    - Performed in accordance with test equipment manufacturer's instructions, and
    - In harmony with ACM Residential Manual Appendix RE-2005, §RE.4.1.1, "Diagnostic Fan Flow Using Flow Capture Hood."
- **General Guidelines**
  - **Step 1:** Fan switch shall be set to "On" position with system air handler operating on maximum speed for the unit. To get highest speed in systems without a fan "On" switch, unit must be run in:
    - Cooling mode for heating and air conditioning systems.
    - Heating mode for heating-only systems.
  - **Step 2:** System airflow (fan flow) shall be measured at the return grille(s) with a calibrated Flow Capture Hood. When multiple return grilles are present, airflow at each shall be measured.
  - **Step 3:** The Total System Airflow in cfm (**Q**ah) shall be the sum of the measured return flows.

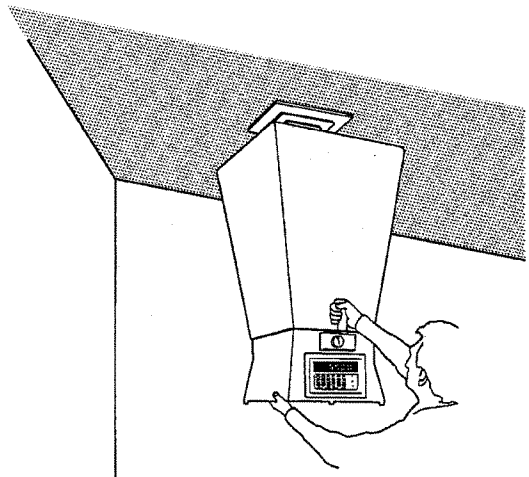

MEASURING AIRFLOW WITH A FLOW CAPTURE HOOD

Minutes from LIEE Standardization Team Meeting

Pacific Energy Center
851 Howard Street
San Francisco, CA

May 10, 2005
9:30 am – 3:00 pm

Present in Person
Kathy Wickware, Sem,pra
Craig Allen, So Cal Gas
Diane Calden, PG&E
Frances Thompson, PG&E
Josie Webb, CPUC
Gregg Lawless, Sempra
Mauricio Blanco, SCE
Roberto del Real, SCE
Ron Garcia, Reliable Energy
Brad Souza, itron
Andre Grieco, RHA
Richard Villasenor, TELACU
Tristen Sotomayer, Maravilla
Manny Gonzalez, Maravilla
Jack Parkhill, SCE
Gilbert Escamilla, ORA
Bill Holloway, PG&E
Jim O'Bannon, RHA
Fred Sebold, Itron

Present by Phone
Richard Shaw
Jim Hodges
Alex Sotomayer
Don Wood
Jay thomas

1. Overview of Meeting

A brief round of introductions took place as there were several members of the public in attendance.

2. Regulatory Update

There was no Regulatory Update for this meeting.

3. Title 24 Duct Testing and Sealing Requirements

This topic was the primary focus of the meeting and took most of the day to discuss. The purpose of this discussion was not to make a final resolution for adjusting the P&P manual, but rather to bring the issues in front of the Standardization Team for input. Jim O'Bannon from RHA gave a presentation that described in detail the

impacts on the LIEE Program of the 2005 Title-24 building standards as they pertain to duct testing and sealing. Key points in that discussion were:

- Under the 2005 Title-24 standards, any alteration to the HVAC system in climate zones 2 & 9-16 generally requires duct testing and sealing; however, the CEC does provide for some exceptions and alternatives to this requirement. Exceptions and alternatives were presented.
- It was pointed out that 1 in 7 homes must be verified by a Home Energy Rating System (HERS) Rater.
- The nature of the contractual relationships was discussed with regard to bringing in an independent 3rd party HERS Rater.
- It was noted that the new Title 24 requirement may require a pre-inspection depending on the compliance approach taken. One approach is to test for total leakage after sealing. Another approach is to test for a change in leakage due to sealing. There was some discussion regarding who would be responsible for the pre-inspection.
- Costs associated with compliance were briefly discussed. More research is needed to clearly understand the costs associated with the various methods of duct testing and sealing.
- The effect of Title 24 duct testing and duct sealing requirements on the standards for the duct testing and duct sealing measure in LIEE were discussed

The action item resulting from this discussion was that RHA will prepare a flowchart that clearly shows, by climate zone, the steps a contractor must follow to comply with Title-24 standards.

4. Modifications to P&P Manual

Two of the Team's recommended changes to the P&P Manual were discussed: treatment of furnace repair and replacement as a Minor Home Repair (MHR) and the 80-20 rule for multi-family dwellings and mobile home parks.

Furnace Repair and Replacement. The Team pointed out that the treatment of furnace repair and replacement as a MHR was based on two factors. First, furnace repair and replacement has always been treated differently from other measures. It has never been required to be cost-effective (unlike other measures), and it has been subject to spending caps, like MHRs. Second, Natural Gas Appliance Testing (NGAT) protocols call for water heaters and furnaces to be repaired or replaced if they fail the NGAT, and consistency would require that water heater and furnace replacement be treated the same way. Since water heater repair or replacement is not included under the LIEE Program except as a result of an NGAT fail, consistency would entail treating both as a MHR.

At least some members of the public took issue with the Team's position. There was considerable public opinion that furnace replacement should be included as a stand-alone measure. Several comments were made, including the following:

- Furnaces are a major appliance, not a minor home repair. There are now many customers who do not need infiltration reduction, but who need a furnace replacement.
- Excluding furnace repair or replacement could cause some homes to fail to meet the minimum number of measures to be installed. In response to this point, the Team argued that it would be very unlikely that a home would fail to meet this minimum as a result of this exclusion. One person suggested that the list of measures and the 3 measure minimum should be reexamined for applicability.
- The 10-year participation rule was questioned due to other items failing within the 10-year period. A member of the Team suggested that there are still plenty of unserved customers and revisiting the 10-year rule was not yet warranted.

No action was taken on the treatment of furnace repairs and replacements as a MHR. This issue will be revisited in a future meeting.

Elimination of 80-20 Rule for Measures Other than Ceiling Insulation. The Team explained its position on this recommendation. The assumption underlying the 8020 rule was that even if a household did not meet income eligibility guidelines, it was likely that the measures would stay with the dwelling and ultimately benefit a future tenant who would satisfy the guidelines. However, increasingly, measures offered under the program tend to be portable, and may be taken when the tenant moves to a new home. Given the importance of focusing Program services, it makes sense to enforce income eligibility on households in all dwelling units.

At least some members of the public disagreed with this position. They noted that the incremental cost of weatherizing an additional unit is low, given the administrative costs of traveling to and serving the building. Contractors should take advantage of the opportunity to save energy and implement low-cost weatherization measures if the opportunity in dwelling units, even if they do not meet income guidelines. It was noted that the weight of this argument depends upon the time taken to serve all units. If the contractor serves all dwelling units in a short amount of time, then the advantages of treating all units may be substantial; however, if the installation process takes a long period of time, the advantage may lessen considerably.

A quick poll of the members of the Team indicated that the Team would be willing to modify its recommendation to allow for weatherization of non-income-qualified dwelling units (subject to the 80-20 rule), but that non-weatherization measures, like

refrigerators, CFLs, evaporative coolers, etc., would be provided only to income-eligible households.

Other policies and procedures covered by the Team's recent recommendations were not discussed. They will be discussed at a later meeting.

5. Modifications to WIS Manual

Several possible modifications to the WIS Manual were discussed.

- ***Duct Sealing.*** A question was raised on whether or not this measure should be reserved for "catastrophic failures" only. Also discussed were minimum requirements for duct sealing materials, the need to develop protocols for pre-sealing data collection, and the need to review Title 24 duct protocols.

- ***Central AC Replacement Standards.*** Warranties were discussed, and it was pointed out that warranties on parts are a minimum of 1 year, but typically 5 to 10 years for high efficiency equipment and compressors. Labor warranties are generally 1 year minimum. It was agreed that electrical work should follow the Electrical code.

- ***Furnace Replacements.*** The issue of efficiency levels required for new furnaces was considered. The group may consider efficiency standards by climate zone in part due to the high cost of 90% AFUE in Southern California.

- ***Duct Testing and Sealing.*** The specific types of alterations that trigger the Title 24 duct testing & sealing requirements were discussed. Jim O'Bannon will present the CEC's position on this at next meeting

6. Next Steps

Jim O'Bannon asked for guidance on what the group would like him to prepare before the next meeting. The Team instructed him to prepare the following items:

- Flow diagrams
- WIS manual modifications to furnace and central AC replacement with respect to Title-24
- WIS standards for duct testing & sealing

The next meeting was scheduled to be a 2-day meeting on June 22-23 at the Pacific Energy Center pending availability

Minutes from LIEE Standardization Team Meeting

Pacific Energy Center
851 Howard Street
San Francisco, CA

June 22, 2005
8:30 am – 4:30 pm

Present in Person

Kathy Wickware, Sempra
Bill Holloway, PG&E
Gilbert Escamilla, ORA
William Parker
John Nall, SCE
Joito Newcomb, CAPSBC
Mike Wren, Reliable Energy
Gregg Lawless, Sempra
Josie Webb, CPUC
Craig Allen, So Cal Gas
Roberto Del Real, SCE
Mauricio Blanco, SCE
Jack Parkhill, SCE
Jeff Beresini, PG&E
Mary O'Drain, PG&E
Richard Villasenor, TEACU
Monte Winegard, Winegard Energy
Andre Grieco, RHA
James O'Bannon, RHA
Arlean Novotney, SoCalForum
Guadalupe Rodriguez, VICS
Greg Redican, CAASM
John Farrow, CCES
Fred Sebold, Itron
Brad Souza, Itron

Present by Phone

Don Wood
Jim Hodges, ACCESS

1.Overview of Meeting

A brief round of introductions took place as there were several members of the public in attendance. It was pointed out that, due to the imminent implementation of the new 2005 Title-24 Standards, the primary focus of meetings will be to consider standards changes needed to comply with Title-24. It was noted that the Team intends to go back and look at filed comments regarding changes to the Policy & Procedures and WIS manuals at a later date once Title-24 related issues are resolved.

2. Regulatory Update

It was announced that the Standardization team received a budget augmentation from the CPUC. It was also noted that ACCESS filed comments regarding the Team's earlier recommendations on standards and policies. The ACCESS comments also contended that the Standardization Team was not addressing the public comments. It was pointed out that the Team had already begun to reconsider one major recommendation (regarding the 80-20 rule) as a result of public participation, and that all public comments will be addressed in the course of the development of new recommendations.

3. Approval of Minutes of May 10, 2005 Meeting

The minutes from the May 10, 2005 were approved without further modifications

4. Compliance with Title 24 Duct Testing and Sealing Requirements

a. Required Steps in Implementation of Title 24 Standards (Flow Chart)

RHA presented a flow chart that has been refined over the past month. It describes the process a contractor would take under several scenarios, including duct testing and sealing as a measure, furnace repair and replacement, and high efficiency AC replacement. The ramifications of title 24 required duct testing and sealing were explored.

b. Policy Issues associated with Title 24 Compliance and Separate Duct Testing and Sealing Measure (consideration of options for conducting pre- and post-sealing duct tests)

A matrix was presented that identifies pros and cons for six different scenarios of how the utilities could administer the program given the additional requirements for duct testing and sealing under Title 24. There were no comments from the public regarding the matrix. It was decided that issues that need to be refined include sampling levels for verifications (and associated precision estimates), costs for each verification option, and costs for various sampling levels. It was agreed that the utilities can select a starting point for verification sampling and then make changes as contractor performance dictates.

c. Modifications of WIS Section on Furnace Repair and Replacement

This item was removed from the agenda.

d. New WIS Section on High Efficiency Air Conditioners

This item was deferred to a later date.

e. Modifications to WIS Section on duct Testing and Sealing

UL 181 was followed as closely as possible in developing the standard. It is important to distinguish between test methods (duct blaster vs. blower door) as they each have their own implementation requirements and results. It was noted that economic stop criteria is an issue that needs to be discussed further.

5. Reconsideration of Policy Recommendations on 80-20 Rule

The group had previously recommended a policy change to the 80-20 rule that would have allowed treatment of only units for which occupants satisfied income eligibility guidelines. During the previous meeting the group received

suggestions for modification of this rule from the public. It was decided that the Team would modify its recommendations, allowing the provision of some program services (generally weatherization) to non-income-eligible households as long as at least 80% of the occupants of the building are income-eligible.

6. Additional Discussion of Policy Recommendations on Treatment of Furnace Repair and Replacement as a Minor Home Repair (MHR)

Several members of the public had comments and questions on the issue of treating furnace repairs and replacements (FR&Rs) as minor home repairs. At least some public participants questioned the reasons for this recommendation. The Team responded that FRR has always been treated like a MHR. It was not required to be cost effective, and it was subject to caps like other minor home repairs. Additionally, it was pointed out that treating FR&R as a minor home repair would also bring it into closer alignment with water heater repair and replacement, which is not offered as a measure.

A question was asked with respect to whether or not treating FR&R as a minor home repair would make it more difficult to satisfy the caps. The Team answered that its recommendations included increases in these caps sufficient to accommodate this treatment. Additionally, it was noted that Decision D 01-05-033 states that furnace repair and replacement is part of one comprehensive program that addresses all feasible measures.

Another question was asked concerning the impact of the Team's recommendation on "go-backs." The Team noted that statewide policy provides for a 10-year go-back rule, and that the practice of earlier go-backs in the SoCalGas service area (when the furnace program was a free-standing program) was out of compliance with that rule.

A member of the public made the point that comfort, health & safety are the major benefits of FR&R, but that these benefits are difficult to quantify. The Team responded that these factors are included in the cost effectiveness analysis based on an earlier study of non energy benefits, and that and the measure is still not cost effective in some climate zones.

7. Next Steps

It was agreed that the next meeting would be held on June 28, 2005 from 9:30 am to 3:30 pm. The agenda would include the costs of Duct Testing & Sealing, Policy & Procedure changes created by Title-24, standards for AC Replacement, duct material costs, R-values and costs of duct insulation, and other issues as needed.

Minutes from the LIEE Standardization Team Meeting
June 28, 2005
Pacific Energy Center
9:30 am - 3:30 pm

Present in Person	
Kathy Wickware, Sempra	James O'Bannon, RHA
Bill Holloway, PG&E	Arlean Novotney, SoCalForum
William Parker, CAASM	Greg Redican, CAASM
Gregg Lawless, Sempra	Fred Sebold, Itron
Josie Webb, CPUC	Brad Souza, Itron
Roberto Del Real, SCE	Ron Garcia, Reliable Energy
Mauricio Blanco, SCE	Wayne T. Rodler, Winegard Energy
Jack Parkhill, SCE	
Mary O'Drain, PG&E	
Richard Villasenor, TEACU	**Present by Phone**
Andre Grieco, RHA	Manuel Ramirez, CPUC/ED
Monte Winegard, Winegard Energy	Jim Hodges, ACCESS

1. Overview of Meeting

A brief round of introductions took place as there were several members of the public in attendance. Agenda item 8 was moved up to between items 5 and 6

2. Regulatory Update

Comments on applications are due by July 7

3. Update on WIS Sections 10 and 20 and Appendix D (RHA)

Changes to each section were reviewed and the following comments were made:.

- Section 20.9: Add R-8 for all electric homes
- Section 3 will be ready by end of this week and will be added to the agenda as an item for the next meeting. The document should be circulated in edit mode.
- Comments about Appendix D should be emailed to Jim O'Bannon by July 12.

Resolutions:
Approved Appendix D pending receipt of comments. Only add as an agenda item if substantiative comments are received.

4. Materials Cost and Availability for Duct Testing and Sealing Materials (RHA)

- **Agenda Item:** Amount of duct used in a home. Gregg Lawless will supply to Brad Souza and Fred Sebold the linear feet, and an estimate of cost differential in the previous program of R-4.2 vs. R-8.

5. Potential Costs of Duct Testing and Sealing

- The following need to be verified:
  - If a greater than or equal to 90% AFUE furnace is installed, as stated in P&P, Title-24 doesn't require duct testing & sealing.
  - If a greater than or equal to 80% AFUE packaged AC with gas heat is installed, as stated in P&P, Title-24 doesn't require duct testing & sealing.

6. Non-Feasibility Conditions for Duct Testing, Duct Sealing and New Measures (RHA)

Documents are to be reviewed and comments submitted within one week.

7. Installation Standards for AC Replacement (RHA)

- Ron Garcia suggested that An amendment is needed on Page 21-3: Change "equal or smaller" to "equal"
- Questions were raised about the creation of a "Properly sized" system and how it could be achieved. It was noted that there is a possibility that complaints could be made if no such system exists..
- ***Resolution:*** It was decided that no further action be taken, since the contractors are sufficiently qualified to carry out their duties.

8. Policies and Procedures Relating to Duct Testing and Sealing (Title 24 Compliance as well as New Measure)

- Some team members wondered whether studies relating to this are readily available. It was pointed out that utilities have hardcopy applications but it would be difficult to obtain them. Monte (from Winegard) has a copy of the 2003 values from SCG and will supply them to the team.
- The stop criteria for duct testing & sealing was discussed and is summarized as follows:
  - For meeting Title-24 one of the following conditions must be met
    - < 15% of total fan flow leakage from ducts
    - < 10% of total fan flow leakage to outside
    - 60% reduction in total leakage
  - How is % Leakage determined? RHA is using the "Subtraction Method" to determine duct leakage. Blower door is needed for leakage to outside. Ex:
    - Fan Flow = 1000 cfm
    - Initial Leakage = 30% = 300 cfm
    - Option 1: Goal of < 15% → 149 cfm for stop criteria
    - Option 3: 60% reduction → 180 cfm reduction so 120 cfm for stop criteria
    - Seal all accessible ducts & do smoke test.

- It was pointed out that contractors are faced with a logistical problem when having to test, break down equipment, request that the utility company carry out a pre-test, and then go back to carry out duct testing and sealing. Richard Villasenor questioned the necessity of carrying out pre-verification as it is an expensive measure with very tight cost-effectiveness assumptions. Ron Garcia commented that pre-inspections could indicate a lack of trust. In response, Gregg Lawless explained that due to the history of unsuccessfully offering this measure a high level of confidence in the pre- and post-sealing leakage levels is needed. However, the overall goal is to minimize inconvenience to the customer.
- **Title-24 Duct Testing & Sealing Policies**.
    - Confirmation from CEC is needed of existing CF-4R
    - Itron will check which weather station is used for each climate zone.

9. Next Steps

The next meeting was scheduled for July 26, with an additional meeting to be held on either July 25 or 27.

Among the topics to be discussed will be:

- Nonfeasibility conditions
- Duct Testing and Sealing Policy
- Workshop Planning
- Title-24 Duct Testing and Sealing, New Measures, New P&P
- Costs for duct insulation
- Ceiling Insulation WIS portion (with catastrophic duct failure)
- Revisit previous WIS & P&P changes
- Mobile homes – Duct Testing and Sealing, entire process, Furnace Repair and Replacement

LIEE
Standardization Team Meeting
Pacific Energy Center
July 25, 2005, 9:30 am – 4:00 pm
July 26, 2005, 8:30 am – 3:00 pm

MINUTES

25-Jul-05

Present in Person	Mike Wren, Reliable Energy
Kathy Wickware, Sempra	James O'Bannon, RHA
Bill Holloway, PG&E	Arleen Novotney, SoCalForum
William Parker, CAASM	Greg Redican, CAASM
Gregg Lawless, Sempra	Fred Sebold, Itron
Josie Webb, CPUC	Brad Souza, Itron
Roberto Del Real, SCE	Ron Garcia, Reliable Energy
Mauricio Blanco, SCE	Wayne T. Rodler, Winegard Energy
Jack Parkhill, SCE	Diane Calden, PG&E
Monte Winegard, Winegard Energy	John Newcomb, CAPSBC
Richard Villasenor, TELACU	Guadalupe Rodriguez
Andre Grieco, RHA	
Doug Moir, Western Appliance	
Mary O'Drain, PG&E	**Present by Phone**
Frances Thompson, PG&E	Richard Shaw
M Campbell, PG&E	Jim Hodges, ACCESS

26-Jul-05

Present in Person	Mike Wren, Reliable Energy
Kathy Wickware, Sempra	James O'Bannon, RHA
	Arleen Novotney, SoCalForum
William Parker, CAASM	Greg Redican, CAASM
Gregg Lawless, Sempra	Fred Sebold, Itron
Josie Webb, CPUC	Brad Souza, Itron
Roberto Del Real, SCE	Ron Garcia, Reliable Energy
Mauricio Blanco, SCE	John Newcomb, CAPSBC
Richard Villasenor, TELACU	
Andre Grieco, RHA	**Present by Phone**
Mary O'Drain, PG&E	Richard Shaw
Frances Thompson, PG&E	Jim Hodges, ACCESS

1. Overview of Meeting

A brief round of introductions took place as there were several members of the public in attendance. Some minor adjustments to the agenda were made.

2. Regulatory Update

There was no regulatory update for this meeting.

3. Approval of Minutes of June 22 Meeting

Minutes for the June 22 meeting were approved with two typo corrections. Minutes for the July 28 meeting will be submitted for approval at the next public meeting.

4. Acceptance of New Proposed Sections to WIS Manual for Conventional Homes (Duct Testing, Duct Sealing, Central AC Replacement, AC Tune-Ups, and Appendix D)

The following actions were take with respect to specific sections of the WIS Manuals:

Section 10: Duct Testing was approved except for the language relating to systems consisting of central AC only.

Section 20: Duct Sealing was approved pending resolution of the R-value ro be required for duct insulation. The team is to decide if this measure should require R-8 for all climate zones or vary as is in the current version of Section 20. For duct repair (p. 20-6), R-value is provided by climate zone. The team is considering making the R-value R-8 for all climate zones. The cost difference is low because the measure is limited to less than 40 feet of new duct work installed.

Section 21: Central High Efficiency Air Conditioner Replacement was approved, and it was noted that the bullet on refrigerant line sets not being replaced needs to be added to the P&P Manual.

Section 23: AC Tune-up was considered, but it was decided that there are several changes that will be made to this section, including:

- Condensate trap: remove requirement to install; change to "recommend installation to customer".
- Page 23-1: 70 degree temperature requirement is difficult to meet in PG&E service territory. Many customers won't be able to participate due to seasonality of the measure. The Team will explore several available programs to evaluate the requirements.
    - There are gauges that allow for 65 degree, 50 degree, etc. but this is difficult to do
    - Tune-up measure is a seasonal activity

- Hold off on approval of this section until issues are resolved
- Weigh-in method: More expensive but can be performed at any outdoor temperature. The cost for RHA is $275 for this test.
- A question was raised whether the Team should consider a policy change to allow go-backs.

- Page 23-3:
  Bullet 2: remove "cleaned or"
  Bullet 4: no access to coil fins: if not accessible, then say not accessible. Don't non-feas the site just skip. Change to "Accessible coil fins"
  Bullet 5: Not part of a "normal" tune up but need to make customer aware. Remove: "trap installed if not present"
  P. 23-2 is for "New" and 23-3 is for "Existing". Need to define "new". Is this really "newer"? Less than 4 years?
- Remove P. 23-2, combine necessary parts with 23-3.
- Revisit Nonfeasibility conditions to add age criteria
- P. 23-4: delete
- P. 23-5: Why "evap coil"? Why not "furnace"?
  SCE only has AC, not furnace.
  Bullet 3 sub-bullet 2: "service before proceeding"
  Pre-NGAT should identify most of these (if blower isn't operating).
  If operating but not at proper amperage, do utilities repair it?
  For SCE, or no furnace, this is a non-feas.

It was noted that a class on AC System layouts would be beneficial to the Team. It was also pointed out that the specification of stop criteria still needs to be addressed. It was agreed that RHA would investigate the costs for different services relating to AC tune-ups.

Appendix D of the Conventional WIS Manual was approved.

5. New Proposed Sections to WIS Manual for Mobile Homes

It was noted that mobile homes are not covered by Title-24; they are governed by Housing & Community Development (HCD). Related codes are primarily HUD Codes. Specific sections of the Mobile Home WIS Manual were considered, with the following results:

Section 11: Duct Testing was approved, subject to one issue on the treatment of homes with only central AC.

Section 17: Duct Sealing was approved subject to further consideration of required R-values, the issue of central AC only, and the issue of installing new central returns.

Section 18: CAC Replacement was approved subject to resolution of the issue of installing central returns.

Section 20: CAC Tune-up was not discussed. It will be considered once the section for conventional homes is finalized.

6. Title 24 Changes to WIS Sections for Conventional Homes

Language dealing with the conformance to Title 24 in several other Sections of the Conventional Home WIS Manual was considered, with the following decisions:

Changes to Section 3: Ceiling Insulation were approved subject to resolution of duct R-value and the correction of a column heading on p. 3-39.

Changes to Section 6: Water Heater Pipe Insulation were approved.

Changes to Section 12: Window Replacement were approved.

Changes to Section 18: Natural Gas Forced Air Heating were approved subject to the resolution of the AFUE for split systems and a minor edit on p. 18-17

Changes to Section 29: NGAT were approved pending resolution of an issue associated with dryers (p. 29-11). Need to make sure P&P manual is clear on what to do with a dryer venting to the inside. The issues raised include:

Why NIM a house if the dryer is vented to inside?
Furnace & water heater cycle on and off; dryer cycles off only
Dryer is portable appliance
Should we install vent for dryer? NO
Should we install infiltration msr in home with dryer vented to inside?
NO because mold, CO, IAQ, etc.

Changes to Section 19: Natural Gas Wall and Floor Furnace Heating were approved.

Changes to Section 25: Natural Gas Water Heater Replacement were approved.

7. Title-24 Changes to WIS Sections for Mobile Homes

Changes to Section 4: Window Replacement were approved, subject to the deletion of references to Title 24.

Changes to Section 16: Natural Gas Cetnral Forced Air Heating were approved, and it wasw decided to adopt an AFUE of 80% as a requirement.

Changes to Section 21: Natural Gas wWater Heater Replacment were approved.

8. Cost Effectiveness of Requiring High Efficiency Furnaces

In a previous meeting the Team responded to a public comment by requesting Itron to revisit the cost effectiveness analysis for high efficiency furnaces and determine whether the incremental increase in efficiency from standard (80% AFUE) to high (92% AFUE) was warranted. Results indicate that requiring the 92% AFUE units is generally not cost effective.

Similarly, Itron was tasked with looking at the cost effectiveness of duct testing and sealing for homes with CAC only. Results indicate that it is only cost effective in a few specific combinations of home type and climate zone. It was agreed that duct testing and sealing would not be offered for these homes, but that Program Managers have the authority to permit this service in extreme cases.

9. Cooling Requirements by Title 24 Climate Zone

Itron has contacted the CEC and is waiting for a response. This agenda item will be considered in the next public meeting.

10. Consideration of Changes to Policy & Procedures Manual

Drafts of Sections 1, 2 and 7 of the P&P Manual were reviewed for the first time, with the following results:

Section 1 was approved with the replacement of the term "final" with the word "operational" to describe Program Manager interpretation of Program policies.

Section 2 (subsections 2.1 – 2.3) was approved with a variety of editorial changes. These edits will be made and a revised version of these subsections will be considered at the next meeting.

Section 7 was approved with a number of changes. A revised version reflecting these changes will be considered at the next meeting.

In discussing Section 7, it was agreed that two measure-specific policy issues remain unresolved: the treatment of furnace repair and replacement as a minot home repair and the treatment of leaky water heaters.

Three specific questions relating to the treatment of furnace repair and replacement were raised:

- Should we install a furnace if no furnace is present?
- Should we repair or replace a furnace if the existing unit passes NGAT (say, if it is older thansome reference age)?

- Should we go back to repair or replace a furnace if it sdevelops problems after the home participates in the Program?

With respect to leaky water heaters, it was agreed that the utilities should start keeping recofrds on the incidence of this problem, and that in the interim program manager discretion will allow for replacement in extreme cases.

11. Next Steps

It was decided that the next two meetings should be in Southern California. The following dates were chosen:

August 12, 9:30 am – 4:00 pm, San Diego
August 23 – tentatively yes; location TBD

LIEE
Standardization Team Meeting
SDG&E, Century Park, Building 1
August 12, 2005, 9:30 am – 3:30 pm

MINUTES

Present in Person	James O'Bannon, RHA
Kathy Wickware, SDG&E & SCG	Fred Sebold, Itron
William Parker, CAASM	Brad Souza, Itron
Gregg Lawless, SDG&E & SCG	John Newcomb, CAPSBC
Josie Webb, CPUC	Craig Allen, SoCalGas
Roberto Del Real, SCE	Alex Sotomayor, Maravilla
Mauricio Blanco, SCE	Joy Yamagata, SDG&E
Jack Parkhill, SCE	
Monte Winegar, Winegard Energy	
Richard Villasenor, TELACU	**Present by Phone**
Yvette Vazquez, SDG&E	Arleen Novotney, SoCalForum
Yole Whiting, SDG&E	Bill Julian, CA State Senate
Mary O'Drain, PG&E	Ron Garcia, Reliable Energy
Frances Thompson, PG&E	Richard Shaw, ASSERT
Mike Wren, Reliable Energy	Jim Hodges, ACCES

1. **Overview of Meeting**

   A brief round of introductions took place as there were several members of the public in attendance. Some minor adjustments were made to the agenda.

2. **Regulatory Update**

   Jim Hodges, attending the meeting by phone, informed the group that he had provided comments on behalf of ACCES to ALJ Weissman, and that he had just received a copy of Southern California Gas Company's (SCG's) letter to ALJ Weissman in response. Mr. Hodges stated that he believes that SCG's reply letter incorrectly characterized ACCES' position. He noted that ACCES believes that SCG changed policy without going through the steps mandated by the Commission, and was simply asking if an individual utility can bypass the established five-step process for P&P changes.

   Josie Webb of the CPUC stated that since the letter was submitted to the CPUC, the issue is in its hands and should not be part of this meeting.

   Fred Sebold pointed out that the Standardization Team meeting was to discuss changes to the statewide P&P and WIS Manuals, rather than to discuss the way in which individual utilities implement the policy. He

suggested that attendees are free to suggest changes in statewide policies during the meeting.

Jim Hodges stated that SCG changed policy from 2 weeks of income documentation to 4 weeks of income documentation which goes against standardization and makes it more difficult for a SCG low income resident to participate. Mr. Hodges also stated that he is not asking for more specificity; just for clarification of ambiguity.

Gregg Lawless responded that income verification changed to 4 weeks for weekly paychecks. Other requirements are 2 bi-weekly paychecks, 2 semi-monthly paychecks, and 1 monthly paycheck. This results in approximately 28-30 days of income. CARE requires 14 days to 2 months of monthly income. This change was an effort to standardize the requirements within SCG's LIEE offerings and bring the LIEE requirements more in line with CARE.

Fred Sebold stated that the P&P Manual outlines documentation required but not how much. It was written to be more general than the implementation practices of each utility, and each utility has always had the discretion to develop its own guidlelines for implementation. Fred Sebold indicated that the disagreement over SCG's implementation of income documentation policies would not be addressed at the meeting.

On behalf of Josie Webb, Sebold announced that the Energy Divison will set up a meeting after August 22 for SCG contractors to discuss SCG policy with Commission staff.

Josie Webb announced that there are two new ORA representatives, Hazlyn Fortune and Mariana Campbell.

3. Approval of Minutes of June 28 and July 25-26 Meetings

Minutes from June 28 were approved.

Minutes from July 25-26 were approved.

Richard Shaw asked about the cost effectiveness calculations for high efficiency furnaces. The question was: On what basis was the calculation made to determine that high efficiency furnaces were not cost effective? It was pointed out that Itron used the cost effectiveness model that has been used for years by the LIEE Program using Participant Test and Utility Cost Test. This model accounts for energy impacts and non energy benefits (NEBs) derived from a TecMarket Works study. This is the same model that the Team used for assessing new and existing measures.

A copy of the model was requested and will be delivered along with the document supplied during the last meeting summarizing the results and a user's guide that Itron created.

4. Furnace Repairs and Replacements as MHRs

It was noted that there are three main issues that need to be resolved:

1. Is Furnace Repair and Replacement a Minor Home Repair?
2. How will go-backs be handled?
3. Can contractors install a furnace if one does not exist?

The public comments were consistently pushing towards replacing all furnaces under the "health and safety" criteria. This was based on the following assumptions:

A. The furnaces that are encountered are old
B. Old repaired furnaces will fail before the end of the 10 year go-back period
C. The homeowner will heat their home with another appliance (i.e. oven) if the furnace fails
D. Weatherization measures installed in the home create additional hazards should the furnace fail in the future

The Standardization Team countered with the following points:

A. If there is indeed a "health and safety" issue then the furnace would fail NGAT.
B. The LIEE Program can only serve customers based on what is present at the home at the time of service. Predicting future failures is beyond the scope of the program and should not be a criteria for furnace replacement.
C. Furnace failure is much less significant of a health and safety issue than stoves and ovens
D. Criteria for repair vs. replacement were discussed for clarification for the public
E. There are still many low income customers that have not received services. Increasing expenditures on each home will result in fewer low income customers receiving services.

During the course of the discussion, three compromises were reached. First, it was agreed that an exception to the 10-year go-back rule would be allowed in cases where the furnace had been repaired as part of the NGAT process, infiltration reduction measures had been installed, and the customer later called to report a malfunction of the furnace. It was pointed out that the process for implementing this exception would have to provide for utility to be informed of the intent to go back to the home in question.

It was also agreed conditionally that the proposed policy on furnace repair and replacement would be modified to allow the installation of a furnace if no furnace is present and another appliance (generally an oven) is used for space heating, provided that there is an existing electrical circuit or gas line to the location, and provided that the customer wants the furnace installed. The utility representatives noted that they needed to check with their respective utilities before authorizing this change.

After further discussion, the Team agreed that furnace repair and replacement would still be characterized as a minor home repair in the current round of recommendations to be filed this year, but that it would be considered as a measure in a separate proceeding, using the standard cost-effectiveness methodology and criteria. The intention to conduct this assessment will be noted in the next filing.

5. **Finalization of Sections 1 and 7 of the P&P Manual (August 8 versions)**

Section 1 was approved.

Section 7 was discussed at length. It was agreed that further changes in this section would be needed to implement the agreements reached on furnace repair and replacement. These changes will be reviewed at the next meeting.

There was considerable discussion regarding AC Tune-ups and the outdoor air temperature limits of this measure. As a result of this discussion, three options were identified:

A: Only offer to customers where appropriate (low outdoor air temperature is a nonfeasabililty criteria)
B: Return to finish the job (not treated as a go-back)
C: Remove measure from consideration

The utilities will discuss these options with their staffs, and the consultants will attempt to assess these and other options.

6. **Continuation of Review of Section 2 of the P&P Manual (August 8 version)**

Kathy Wickware explained the CARE treatment of income from rentals and self employment, and it was agreed that changes would be made to Section 2 to bring LIEE policy into alignment with the CARE policy.

Richard Shaw expressed his disagreement with the ruling of monetary gifts as income. Richard would like to have a cap of, say $1,000, for gifts to be considered income. The Team decided to maintain the inclusion of gifts as income.

Monte Winegar stated that he would like to see descriptions of documentation. Bill Parker asked if federal government block grants are acceptable forms of documentation. Response was that qualification for other programs cannot be taken as adequate evidence of qualification for the LIEE Program, except in the case where the utility has verified that the customer is CARE-eligible within the past year.

It was noted that a few additional changes to the Section on service eligibility will have to be made to reflect earlier agreements on furnace repairs and replacements.

Subject to these comments and a few other minor edits, Section 2 was approved.

7. **Review of Sections 3-6 and 8-10 of the P&P Manual (July 15 versions, distributed before last meeting)**

   Sections 3-5 were reviewed and approved with minor changes to Section 5. Sections 6, 8-10 will be reviewed in the next public meeting.

8. **Next Steps**

   The filing date for our next report is currently October 1, 2005. Due to the requirements for public meetings and the changes associated with Title-24 compliance the Team will request an extension to November 1, 2005.

   The next meeting is scheduled for August 23 at SDG&E, Century Park. Meeting time is 8:30 am to 3:00 pm.

   A 2-day meeting is scheduled for Sept. 8 & 9 at a location in Southern California to be determined.

   Workshops need to beheld in September. Proposed dates are:
   Sept 29 in Southern California
   Sept 30 in Northern California

LIEE
Standardization Team Meeting
SDG&E, Century Park, Building 1
August 23, 2005, 8:30 am – 3:30 pm

MINUTES

Attendees	
Present in Person	
Kathy Wickware, Sempra	Richard Villasenor, TELACU
Josie Webb, CPUC	Monte Winegard, Winegard Energy
Mary O'Drain, PG&E	John Morgan, CPUC
Frances Thompson, PG&E	Brad Souza, Itron
Gregg Lawless, Sempra	James O'Bannon, RHA
Craig Allen, SCG	Fred Sebold, Itron
Allan Rago, QCS	Mike Wren, Reliable Energy
Roberto Del Real, SCE	Arleen Novotney, SoCalForum
Art Cisneros, Vics	
Mauricio Blanco, SCE	***Present by Phone***
Jack Parkhill, SCE	Richard Shaw
Jay Thomas, ACH	Jim Hodges, ACCES
Joe Williams, RHA	Joseph Leonard, ED-CPUC
William Parker, CAASM	Sarv Randhawa, CPUC
John Newcomb, CAPSBC	

1. Overview of Meeting

A brief round of introductions took place as there were several members of the public in attendance. Item 6 was added to the agenda.

2. Regulatory Update

There was no regulatory update for this meeting.

3. Approval of Minutes of August 12 Meetings

Minutes for the August 12 meeting were approved.

4. Finalization of all sections of P&P Manual

The following actions were taken with respect to specific sections of the WIS Manuals:

Section 1: Introduction

No new changes

Section 2: Customer and Structural Eligibility

Several issues remain unresolved at this time. These issues were discussed and either resolved or tabled until a future meeing as described below.

- Footnote 7 on page 2-9: The issue of how to handle homes where no furnace exists will be resolved during the September 8-9 meeting.
- Table 2-3: Monte Winegar of Winegard Energy provided some examples of income documentation. This issue was placed as a new agenda item #6.
- The issue of go-backs was discussed. The general opinion of the group was that the policy for go-backs needs to be more tightly defined such that all situations have clear policies in place that accomplish the objective of the LIEE program. This issue will be an agenda item at the September 8-9 meeting. The conversation focused on two major issues. The first, expressed by Richard Villasenor and others, was that contractors should be able to go back to homes to provide measures not previously installed and to check on potentially hazardous situations relating to the operation of natural gas appliances. The other, expressed by Gregg Lawless, Mary O'Drain and Josie Webb, was the need to focus resources on treating homes not already treated through the program, rather than offering a maintenance, or subscription, service to a limited set of homes. Craig Allen stated that currently no customer is left with an unsafe condition,a d that professional HVAC contractors do the work and check entire system. He expressed a problem with the suggestion that there is a safety issue. Jim O'Bannon cited a Commission decision allowing go-backs for some rapid deployment measures. Fred Sebold suggested that the Team set aside general issue of Go-Backs for next meeting as a separate agenda item.

Section 3: Customer Outreach and Customer Relations

No new changes

Section 4: Procedures for Pre-Installation Contacts

No new changes

Section 5: Program Measures for PY 2006

Table 5-1 will be updated to reflect eligible measures by climate zone.

Section 6: Minor Home Repairs

A question was raised regarding the 20% expenditure cap for all minor home repairs as it may limit the installatin of "all feasible measures." Utilities will review the "other" cap of $750 to determine if it can be adjusted and remove the 20% cap.

Section 7: Measure Installation Policies and Procedures

Several issues relating to Section 7 were discussed:

- The footnote on P. 7-19 will be tabled until next meeting.
- Section 7.1.21 will be updated using language provided by RHA.
- Section 7.3.24, Air Conditioner Tune-ups, Other Policies: Remove specific mention of companies and reword to require a "qualified" professional/service.
- The group needs to resolve how to handle the seasonality of this measure. Jack Parkhill suggested a pilot program for SCE to assess feasibility of the measure and postpone implementation of the measure. PG&E would like to also participate in this pilot. Options for deliving the measure would be:
    1. The measure would be non-feasible when the ambient temperature is below 70 degrees
    2. Keep a list of LIEE participants that could not receive this measure due to temperature limitations and provide service at a later date
    3. Implement the weigh-in procedure
    4. Offer a pilot program as suggested by SCE

  The group decided to file an amendment to offer this measure as a pilot program in 2006, rather than offering it as a program-wide measure.

Section 8: Inspection Policies

Two issues relating to Section 8 were raised:

- Section 8.4.2: A question was raised by the public as to why a house fails when many times just a small measure fails. It was stated that it did not seem to be fair to have to revisit a home for a very small measure.
    - What is timing from install to inspection? Typically 30 days
    - What is timing from first to last measure?
    - Why is this paragraph in there? To create a tracking system to tailor inspections based on contractors overall performance.
    - It was agreed that Itron will remove the phrase "determine payments and"
- Section 8.4.7: Itron will edit this paragraph to make it more balanced. Each utility will send an email to Josie stating if this language is in current contracts.

Section 9: Contractor Eligibility

A question was raised regarding the licensing requirements. Does the program require a C-20 license or is a B license acceptable? The response is that there isn't

a requirement for general weatherization but each contractor must provide a qualified professional for the work being performed, as stated in the utility contracts with each contractor. This includes a C-10 license for electrical work and a C-20 license for HVAC work. It was agreed that the utilities would check with their legal department to determine the licensing requirement For duct testing & sealing and report back to Jim O'Bannon by August 26, 2005.

Section 10: Natural Gas Appliance Testing

Several potential NGAT failure situations were discussed.

- Public attendees would like to repair gas dryer vents. A discussion was held covering the potential problems this could cause such as breaking the gas line serving the dryer.
- Wall furnace that fails CVA. Can contractors install a direct-vent furnace? The issues are: cost and energy savings. The program would not be able to justify the cost-effectiveness of replacing a working furnace just so that weatherization measures may be installed.
- Water heater vents: Can contractors fix vents if they are simply misaligned? This varies by utility and can not be done in rentals.
- Mobile homes: These are typically pre-manufactured for a specific equipment type (i.e. evap coolers). The P&P manual says contractors can't do anything on mobile homes because of where the venting is. But on a prefabricated home the venting can't be changed. This is mainly an issue with AC and Furnaces, but also with AC and water heater.
- Whole house fan: Can electronic ignition be installed on the furnace rather than NIM the house?
- Section 10.4: It was agreed to editthe required timing for NGAT to read, "Within 5 business days".

5. Finalization of WIS Changes

Two issues were raised with respect to the WIS Manual:

Section 18: Question: There isn't a 13 seer packaged unit currently available. What do contractors do? Answer: Comply with Title-24.

Section M16: Spell out HCD as Housing and Community Development

6. Income Documentation

Monte Winegar's email listing several other income sources was discussed. The question was wheterh or not these sources should be included in the list cited in the P&P Manual. A subcommittee was formed to examine these income documentation sources. The subcommittee members are: Frances Thompson, Gregg Lawless, Josie Webb, Monte Winegar, and Richard Villasenor. The subcommittee will report to the Standardization Team at the next meeting.

7. Next Steps

The next meeting will be held Sept. 8-9, 2005 at the ERC Downey. The meeting will start at 10:00 am on day 1 and 8:30 am on day 2. Workshops need to be planned. Time permitting, this may be decided before the next meeting.

LIEE
Standardization Team Meeting
Southern California Gas Company
Energy Resource Center
September 8, 2005, 10:00 am – 4:30 pm
September 9, 8:30 am – 10:00 am

MINUTES

Attendees	
In Person Attendees	
Kathy Wickware, SDG&E/SoCalGas	Aleen Novotney, SoCalForum
Craig Allen, SoCalGas	John Newcomb, CAPSBC
Jim Lucas, SoCalGas	Gregg Lawless, SDG&E/SoCalGas
Adam Knowles, SoCalGas	Richard Shaw, ASSERT
Roberto Del Real, SCE	Arthur Cisneros, VICS
Jack Parkhill, SCE	Allan Rago, QCS
Frances Thompson, PG&E	Richard Villasenor, TELACU
Mary O'Drain, PG&E	Diane Shakoor, Community Action Agency of San Mateo Cty
Fred Sebold, Itron	Mike Wren, Reliable Energy
James O'Bannon, RHA	
Eric Quandt, The Jones Company	***Attendees by Phone***
Ron Garcia, Reliable Energy	Brad Souza, Itron
Josie Webb, CPUC/Energy Division	Jim Hodges, ACCES
Monte Winegar, Winegard Energy	Sarv Randawa, CPUC/Energy Division

1. Overview of Meeting

A brief round of introductions took place as there were several members of the public in attendance.

2. Regulatory Update

Kathy Wickware provided a regulatory update of the recent filings to the Commission. The Standardization Team requested a two-month extension of time to file the recommended changes to the LIEE Statewide Policy and Procedures (P&P) Manual and the Weatherization Installation Standards (WIS) Manual for program year 2006. The manuals will be filed no later than November 1, 2005.

On September 7, the Standardization Team amended its "Report on the Assessment of Proposed New Program Year 2006 Low Income Energy Efficiency Program Measures" (the Report) dated May 2, 2005. The Standardization Team requested to postpone the inclusion of the proposed air conditioner maintenance/tune-up (A/C

maintenance) measure in the 2006 LIEE program until recently recognized service delivery issues can be assessed.

3. Approval of Minutes of August 23 Meetings

This item was deferred to the next meeting.

4. Finalization of Changes to Policy & Procedures Manual

Most of the meeting was spent on going through the P&P Manual to make a final round of edits before the workshops scheduled for September 29 and 30. The following changes were made to the manual:

- The language relating to Table 2-3 (income documentation requirements) was changed to characterize the listed documentation as illustrative rather than exhaustive. Program Managers will work with contractors to develop a more detailed list.

- Footnote 7 of Section 2, which includes the case where no furnace is present and in which the household uses another gas appliance for heating as an NGAT fail, was accepted.

- Section 2.8 was changed to increase the number of cases in which a home may be revisited prior to the end of the 10-year window. A temporary exception was also approved for central air conditioner and window/wall air conditioner replacements in the SCE service area for a period extending through the 2008 program year.

- In discussing Section 2.9 (on the need for LIEE services), Richard Villasenor asked how these requirements are implemented in the case where different electric and gas utilities serve the home. According to the P&P, the home should be treated as if it were served by a single dual-fuel utility, but with a referral system set up to make sure all feasible measures are installed. Richard asked for an explanation of this referral system in the SCE-SoCalGas overlap area. Gregg Lawless and Roberto Del Real suggested that the policy is clear, but that the implementation process still has to be refined. They will work together to develop such a process.

- In discussing Section 5, Richard Shaw noted that the Team should look at a wide range of other possible program measures like the replacement of halogen torchieres. Fred Sebold noted that there is a new measure solicitation process in place, and that these measures could be recommended through that process.

- Minor editorial changes were made to Section 5.

- Wording relating to the characterization of the absence of a gas furnace in cases where another gas appliance is used for space heating as an NGAT fail was clarified.

- Repairing door locks/latches was dropped as a minor home repair in Table 6-7.

- A footnote was added to Table 6-9 to indicate that the cap for minor home repair costs do not include the cost of Title 24 compliance. Moreover, a reference to overall program budget limits was dropped, to reflect the fact that there are caps on specific types of minor home repairs and this overall cap is not needed.

- Other Policies and Procedures for Furnace Repair and Replacement (Section 7.3.17) were corrected to provide that a furnace may be repaired only if the cost of repairing the furnace is less than a given percentage of the cost of replacing the unit.

- Other Policies and Procedures for Water Heater Repair and Replacement (Section 7.3.18) were corrected to provide that a water heater may be repaired only if the cost of repairing it is less than 50% of the cost of replacing the unit.

- Refrigerator replacement policy (Section 7.3.19) was changed to drop the restriction on the size of a replacement unit replacing two replaced units.

- The language relating to licensing requirements for contractors (Section 9.3) was changed to take out specific references to individual licenses.

- Section 10.3.1 was changed to delete the reference to the treatment of non-operable propane appliances.

- The issue of CVA was discussed at length. Jim O'Bannon pointed out that there were two issues here: !) should we have CVA requirements and 2) what should we do to resolve CVA issues. Everyone seemed to agree that we should have CVA requirements. Richard Villasenor suggested that CVA issues should be resolved so that a hazardous condition can be mitigated and infiltration reduction measures can be installed. Ron Garcia pointed out that there is no hazardous condition in these cases unless infiltration reduction measures are installed. After discussing this at length, it was agreed that Jim O'Bannon would work on the development of a set of actions that can be taken when CVA is inadequate. Fred Sebold suggested that we would try to come back to this after the workshops, but before the filing. (Note: After further discussion, it was decided that this will be done under a new work scope, rather than being addressed in the upcoming filing.)

- The requirement that gas dryers vent to the outside was discussed, but with no resolution. This will be revisited in the next meeting.

- Under Section 10.4, the requirement for the timing of NGAT was changed, per an earlier agreement, to be "within 5 working days" from the date of installation of infiltration reduction measures.

5. Next Steps

The next steps involve two workshops: one workshop to be held in San Diego on September 29 and one workshop to be held in San Francisco on September 30. The Team also agreed to meet again on October 6. (Note: Due to a conflict with the Commission's En Banc Hearings, this date was later changed to October 11.)

Standardization Team Meeting
October 11, 2005, 8:30 am – 4:00 pm

MINUTES

Attendees	
In Person Attendees	
Kathy Wickware, SDG&E/SoCalGas	Barbara Williams, RHA
Roberto Del Real, SCE	Jeff Beresini, PG&E
Greg Redican, CAASM	Manny Nunez, Contractor's Supply
John Newcomb, CAPSBC	
Sarv Randawa, CPUC/Energy Division	
Joseph Leonard, CPUC/Energy Division	
William Parker, CAASM	
Mary O'Drain, PG&E	
Fred Sebold, Itron	
James O'Bannon, RHA	***Attendees by Phone***
Brad Souza, Itron	Kevin McKinley, SDG&E
Andre Grieco, RHA	Jack Parkhill, SCE
	Jim Hodges, ACCES
	Gregg Lawless, SDG&E/SoCalGas
	Richard Shaw, ASSERT
	Richard Villasenor, TELACU

1. Overview of Meeting

A brief round of introductions took place as there were several members of the public in attendance.

2. Regulatory Update

Kathy Wickware indicated that the Team had asked the Commission to rule on proposed new measures by October 15, 2005. If no such ruling is forthcoming, we may have to revise the Policy & Procedures (P&P) Manual and the Weatherization Installation Standards (WIS) Manual to exclude these measures. Joseph Leonard offered to try to get some clarification of the Commission's intent with respect to the proposed new measures. Kathy also indicated that the Team's budget augmentation request for Phase 5.2 of the Standardization Project was being filed on October 11.

3. Approval of Minutes of August 23 and September 8-9 Meetings

The minutes of the August 23 and September 8-9 meetings were approved.

4. Approval of Workshop Notes

Notes from the September 29 and September 30 workshops were approved.

5. Consideration of Climate in the Evaluation of Measures

The Team discussed the best means of capturing the variation in savings across climates. Jack Parkhill expressed the desire to use areas smaller than CEC Title 24 climate zones for the analysis, at least for some areas. He also expressed the desire to focus on summer cooling conditions rather than using year-around cooling degree-days. Fred Sebold suggested that consideration of summer peak conditions would be addressed better by using time-of-use avoided costs rather than single annual average avoided costs in the analysis of weather-sensitive measures. It was agreed that the Team would consider these issues as part of the AC Tune-Up pilot project, if the project is approved by the Commission. In doing so, the Team will coordinate with the measurement and verification subcommittee.

6. Finalization of Changes to Policy & Procedures Manual

Most of the meeting was spent on going through the P&P Manual to make a final round of edits before filing the proposed changes. The following changes were made to the manual:

- Language was added to Section 1 to call for consultation with contractors prior to changes in implementation of Program policies.
- Formatting changes were made in Table 2-1.
- Compact fluorescents were deleted from the list of measures that can be offered only in income-eligible dwelling units. This measure will also be provided to non-income eligible households in multi-family buildings satisfying the 80-20% rule.
- A variety of editorial changes designed to bring the P&P and WIS Manuals into consistency were made in Section 7.
- It was agreed that the consideration of elevating gas water heaters that are not 18" off the floor would be taken up in the next round of edits to the manuals.
- It was agreed that the language on p. 8-2 relating to the need for pre-authorization of furnace and water heater replacements in the SoCalGas service area would be retained.
- It was agreed that the language relating to venting of dryers (p. 10-4) would be retained, with the provision that we will write standards for venting dryers to the outside under Phase 5.2 of the Standardization Project.

7. Finalization of Changes to the WIS Manual

Jim O'Bannon indicated that there were no more changes to the WIS Manual to consider. However, there will be minor clerical edits designed to correct errors and

to ensure consistency between the P&P and the Conventional WIS and Mobile Home WIS Manuals.

8. Next Steps

The next step entails filing recommended changes in the P&P and WIS manuals. Changes will be filed around October 22 if there are no further modifications to the manuals. However, if policies relating to the proposed new measures need to be removed from the manuals, additional time will be needed. In either event, the Team will comply with the November 1 deadline for filing.

Summary of
Low Income Energy Efficiency Program
Standardization Workshop
September 29, 2005
10 am – 12 pm
San Diego Gas Electric Company
Century Park

Attendees

Present in Person	
Kathy Wickware, Sempra	Darryl Johnson, CAPSBC
Gregg Lawless, Sempra	Alex Sotomayer, Maravilla
Jack Parkhill, SCE	Brad Souza, Itron
Adam Knowles, Sempra	Andre Grieco, RHA
Dave Cantrell, Sempra	
Fred Sebold, Itron	***Present by Phone***
James O'Bannon, RHA	Mary O'Drain, PG&E
Ron Garcia, Reliable Energy	Richard Shaw, Assert
John Newcomb, CAPSBC	Jim Hodges, ACCES
Richard Villasenor, TELACU	Craig Pearson, RHA

1. Overview of Workshop

Fred Sebold pointed out that the primary purpose of the workshop was to obtain public input on proposed changes to the Low Income Energy Efficiency (LIEE) program Policies and Procedures (P&P) Manual and the Weatherization Installation Standards (WIS) Manual. Fred summarized the agenda for the workshop.

2. Introductions

Parties attending the workshop by phone or in person introduced themselves.

3. Overview of the Procedures Followed by the Team

Fred Sebold summarized the procedures followed by the Team to develop new recommendations. These procedures included two earlier workshops, two meetings with the Low Income Oversight Board (LIOB), ten public meetings, and discussions with the California Energy Commission relating to new Title 24 requirements.

4. Summary of Changes in the Policies and Procedures Manual

Fred Sebold summarized the recommended changes in the P&P Manual.

5. Summary of Changes in the WIS Manual

Jim O'Bannon summarized the recommended changes in the WIS Manual.

6. Public Input

The floor was opened for public input. A summary of that input follows.

Richard Villasenor made several points (P&P page references in parentheses):

1. While Program Managers have responsibility for the operational interpretation of policies and procedures, we need a requirement that Program Managers discuss any changes with contractors before they are made. (p. 1-1)
2. Utilities should standardize exactly the type of income documentation to be collected. (p. 2-7)
3. The utilities should run a pilot program for repairing and/or replacing furnaces in rental properties. (p. 2-16, second bullet)
4. Wording in the manual should be changed to provide that "...a home that has received infiltration-reduction measures, and has not received a furnace replacement through the program, <u>will</u> be revisited..." Also, in the same paragraph, a "hazardous condition" should be defined. (p. 2-17)
5. Clarify whether or not a furnace can be installed when one has previously been removed. (p. 6-1, 2nd paragraph)
6. On p. 7-21, confirm that the fourth bullet does not apply to water heater repairs.
7. Develop firm standards for when a furnace should be repaired or replaced. (p. 8-2, second bullet)
8. Develop a solution for dryer vent issues and vent terminations. (p. 10-6)
9. Clarify that thermostats can be replaced as part of furnace repair. (WIS Manual, p. 18-B)
10. Allow replacement of leaky gas water heater. (The Team noted that this is already allowed under recommended policy, insofar as a leaky gas water heater is considered an NGAT fail.)

Darryl Johnson of REMCO raised a question on how NGAT can be done when a home has electric space heating and uses natural gas for some other end use. The Team responded that this is not an issue when the home is served by a dual-fuel

IOU, and that in overlap areas the policy is that the gas utility would do the NGAT under a cooperative agreement with the electric utility.

Ron Garcia made the following recommendations:

1. Replace leaky water heaters, both natural gas and electric.
2. Revisit the cost-effectiveness of replacing FAU's with high efficiency units in consideration of the high cost of natural gas.
3. In evaluating furnace repairs and replacement, consider that the costs of furnace replacements may be lower in homes that have central air conditioning (with condensate lines). Richard Villasenor said he wasn't sure these existing lines could be used for the furnace. Jim O'Bannon said he would check into this.
4. Consider using smaller geographic areas than CEC climate zones when evaluating furnace replacements.

Richard Villasenor asked if contractors need to install T&P valves when doing water heater repairs. Jim O'Bannon agreed to look into this.

Richard Shaw of Assert provided prepared comments. These comments are appended. A summary of the comments follows:

1. Income qualification procedures should be simplified. A "block weatherization program" should be implemented in underserved areas where hard-to-reach customers reside. Categorical eligibility should be considered for customers already enrolled in other low-income programs.
2. Compact Fluorescents should be added to the list of measures provided to homes that are not individually income-eligible under the multi-family 80-20 rule.
3. Outreach workers should inform government programs like the IRS earned income credit and California's Health Families Program.
4. Home Energy Surveys should be included in the LIEE Program.
5. Some measures, like torchieres, should be added to LIEE Program offerings. Energy education should be treated as a measure so that savings from it can count toward 2007 and 2008 savings goals.

6. A memorandum of understanding between the California utilities and the State Department of Community Services should be developed to cover homes with combustion fuels other than natural gas.
7. Standards for water heater flue/vent pipes in conventional homes should be relaxed.

Attachment

Comments of Richard Shaw

Standards Workshop
September 29, 2005
San Diego, California

Overview

Low Income Weatherization Programs and services address three areas of concern: Equity, Saving Energy, and the Safety and Health of low-income customers. Low-income customers are often precluded from utilizing energy efficiency and related programs and services offered by Utility Companies because they lack the necessary resources. The Low Income Programs provide a means through which these customers can participate, thus, addressing Equity Issues. Saving energy is a "first order of business" or priority among Utility Companies. Low Income Programs can provided significant energy savings if designed, organized, and administered effectively and efficiently. Energy savings is enhanced by the installation of "all feasible measures" in each dwelling (*whole house approach*) and the inclusion of a full range of energy savings measures, especially those new measures with the greatest potential for energy savings. When installing measures in a customer's home, safety and health are paramount concerns.

With rising energy prices, these programs and services become even more important to low-income customers and the maintenance of energy supplies to all customers. Rising prices directly impacts the "cost effectiveness" of these programs.

Key components in effective Low Income Programs are: efficient and streamlined qualifying procedures that are inclusive rather than exclusive of low income customers; a full range of measures that can be efficiently installed by contractors with the minimum of paperwork processing and delay; effective assessment or survey instruments and procedures for identifying all feasible measures that can be installed; and, a network of professional and licensed contractors that can rapidly and effectively respond to the needs of customers.

Although Low Income Programs may never be "cost effective" since they are guided not by one, but three principles, it is incumbent upon all energy practitioners including Utility Companies and contractors to maximize energy efficiency and the energy savings of these programs while meeting the needs of low-income customers.

The design of Low Income Programs as well as policies, procedures, and installation standards should be reviewed from time to time in order to determine and implement the most effective ways and means of meeting the needs of low-income customers, saving energy, and protecting the safety and health of customers. All stakeholders should be actively involved in this continuous process in order to develop and operate the best programs with the best practices.

Comments on the 2006
Low Income Energy Efficiency Program
Statewide Policy and procedures Manual

2.2 Income Requirements

Comment:
Over the years, income qualification procedures have become more complex and income documentation requirements more exhaustive in practice. Many hard-to-reach customers or rather potential customers do not have the financial sophistication or resources to meet the requirements of the system. Some system requirements are onerous to such customers. The time required by outreach workers to work with customers in completing applications for the program, in documenting income and other program requirements, and in securing required documents and forms has increased substantially, and, therefore, outreach costs, consequentially, have also increased substantially.

Recommendation:
Other means for qualifying customers for the Low Income Energy Efficiency Program should be considered, evaluated and implemented. A "Block Weatherization Program" in "underserved areas" where substantial "heard-to-reach" customers reside should be developed and implemented.

"Categorical" or "Program" Eligibility should also be considered where a customer currently enrolled or served by a program that has income eligibility requirements could be automatically served in a Low Income Program. Eligibility would be based solely on verified documentation of the participation of that customer in a qualified program such as SSI or a LIHEAP Utility Payment Program.

2.2.6 Qualifying Multifamily Complexes Point 2

Comment:
Compact fluorescent lamps have a significant "energy savings" value. The installation of compact fluorescent bulbs are also a part of an initial home visits by outreach workers in duel-fuel or electric utility programs and services. Thus, CFLs are treated differently than other electric measures. By Point 2, compact fluorescent lamps are excluded form the 80% rule, thus, causing a "lost opportunity" for generating energy savings.

Recommendation:
Compact fluorescent lamps should be removed from Point 2 and included as a measure in the 80%/20% Rule.

4.2 Description of Program Services Last Paragraph

"The outreach worker may also describe government programs like the Internal Revenue Service's earned income tax and the State of California's Health Families Program."

Comment:
These are excellent resources for Low Income Customers.

Recommendation:
The Customer Energy Education and Resource Guided used by the Southern California Gas Company and the Southern California Edison Company should be revised to include information on these types of programs. The energy cost portions of the Guide should also be revised to reflect current cost structures.

4.5 In-Home Energy Assessments

Comment:
Home Energy Efficiency Surveys should be included in Low Income Programs.

5.3 Consideration of Changes to Measure List

Comment:
There are some measures such as the replacement of Halogen Torchieres that generate substantial "energy savings". These measures are currently known to the Utility Companies. These types of measures should be included in Low Income Programs as soon as possible in order to meet "2006, 2007, 2008 energy savings goals". There should be no impediments, including process impediments, to generating maximum energy savings in Low Income Programs through the introduction of substantial energy saving measures.

According to Federal Studies, Energy Education results in energy savings.

Recommendations:
Torchieres should be included in the 2006 program. (Let not the "process" become the "impediment" to generating energy savings).

Energy Education should be established as a measure with a deemed energy savings value so that the Energy Education elements of the Low Income Programs could be counted in meeting the 2007 and 2008 energy goals.

10.2.2 Applicability to Combustion Fuels other than IOU Natural Gas

Question:
Does a Memorandum of Understanding (MOU) exist between the Utilities and the State Department of Community Services and Development?

Comments on the
California Weatherization
Installation Standards Manual

California Conventional WIS
NGAT Standards
Part 2: Pre-Wx Evaluations
29-11

"A water heater flue/vent pipe located within 10' of an evaporative cooler shall terminate at least 3' above the cooler intake".

California Mobile Home WIS
NGAT Standards
part 2: Pre-Wx Evaluations

"A Water Heater flue/vent pipe shall not terminate within 3' of the cooler air intake"

Comment:
The standard contained in the "California Conventional Home WIS" pertaining to the l location of water heater flue/vent pipes in proximity to evaporative coolers results in the exclusion of a signification number of homes in high wind areas due to the non-feasibility of the installation of certain measures due to that Standard. The mobile home standard of 3' does not cause such a problem.

Summary of
Low Income Energy Efficiency Program
Standardization Workshop
September 30, 2005
10 am – 12 pm
Pacific Energy Center

Attendees

Present in Person	***Present by Phone***
Kathy Wickware, Sempra	Ron Garcia, Reliable Energy
Frances Thompson	Gregg Lawless, Sempra
Mary O'Drain, PG&E	Jim Hodges, ACCES
Joe Williams, RHA	Tom Spangler, Com Action of OC
Bill Holloway, PG&E	
Lake Tongas, PG&E	
William Parker, CAASM	
Rashid Rashid, ORA/CPUC	
Fred Sebold, Itron	
James O'Bannon, RHA	
Andre Grieco, RHA	

1. Overview of Workshop

Fred Sebold pointed out that the primary purpose of the workshop was to obtain public input on proposed changes to the Low Income Energy Efficiency (LIEE) program Policies and Procedures (P&P) Manual and the Weatherization Installation Standards (WIS) Manual. Fred summarized the agenda for the workshop.

2. Introductions

Parties attending the workshop by phone or in person introduced themselves.

3. Overview of the Procedures Followed by the Team

Fred Sebold summarized the procedures followed by the Team to develop new recommendations. These procedures included two earlier workshops, two meetings with the Low Income Oversight Board (LIOB), ten public meetings, and discussions with the California Energy Commission relating to new Title 24 requirements.

4. Summary of Changes in the Policies and Procedures Manual

Fred Sebold summarized the recommended changes in the P&P Manual.

5. Summary of Changes in the WIS Manual

Jim O'Bannon summarized the recommended changes in the WIS Manual.

6. Public Input

The floor was opened for public input. A summary of that input follows.

Ron Garcia reiterated that he would like to see the Team reconsider the installation of high effiency furnaces, in light of the projects of high natural gas costs.

Tom Spangler suggested that utilities target first-time participants in areas with low Program saturations rather than going back to many homes already treated through the Program. Tom indicated income qualification requirements and documentation in these areas should be simplified.

CERTIFICATE OF SERVICE

I hereby certify that pursuant to Commission's Rules of Practice and Procedure, I have this day served a true and correct copy of **LOW INCOME ENERGY EFFICIENCY PROGRAM STANDARDIZATION TEAM PROPOSED REVISIONS TO THE LOW-INCOME ENERGY EFFICIENCY STATEWIDE POLICIES AND PROCEDURES MANUAL AND WEATHERIZATION INSTALLATION STANDARDS MANUAL** to each party of record on the service list in R.04-01-006, et al. via electronic mail. Those parties without an email address were served by placing copies in properly addressed and sealed envelopes and depositing such envelopes in the United States Mail with first-class postage prepaid.

Executed this 1st day of November, 2005 at San Diego, California.

Lisa Fucci-Ortiz

Lisa Fucci-Ortiz